ABBREVIATIONS

ACU	AIR CONDITIONING UNIT
AFF	ABOVE FINISHED FLOOR
AHU	AIR HANDLING UNIT
AL	ACOUSTIC LINING
ARCH	ARCHITECT/ARCHITECTURAL
ASME	AMERICAN SOCIETY OF MECHANICAL ENGINEERS
ASTM	AMERICAN SOCIETY FOR TESTING AND MATERIALS
AW	ACID WASTE
BLDG	BUILDING
BOD	BOTTOM OF DUCT
BOP	BOTTOM OF PIPE
BOS	BOTTOM OF STEEL
CAV	CONSTANT AIR VOLUME
CBC	CALIFORNIA BUILDING CODE
CC	COOLING COIL
CFM	CUBIC FEET PER MINUTE
CH	CHILLER
CI	CAST IRON
CL	CENTERLINE
CLG	CEILING
COL	COLUMN
CONC	CONCRETE
CONT	CONTINUATION
CT	COOLING TOWER
CU	COPPER
CW	COLD WATER
DB	DRY BULB
DH	DEHUMIDIFIER
DIA	DIAMETER
DIM	DIMENSION
DN	DOWN
DWG	DRAWING
(E)	EXISTING
(ER)	EXISTING TO BE RELOCATED
EAT	EXHAUST AIR TEMPERATURE
EF	EXHAUST FAN
EL	ELEVATION
ELEC	ELECTRICAL
ET	EXPANSION TANK
EW	EMERGENCY EYEWASH
EXH	EXHAUST
(F)	FUTURE
FCU	FAN COIL UNIT
FFE	FINISHED FLOOR ELEVATION
FLR	FLOOR
FM	FLOW METER
FOB	FLAT ON BOTTOM
FOT	FLAT ON TOP
FPM	FEET PER MINUTE
FS	FLOW SWITCH
FT	FEET
GPM	GALLONS PER MINUTE
GR	GRADE
HC	HEATING COIL
HORIZ	HORIZONTAL
HVAC	HEATING, VENTILATING AND AIR CONDITIONING
HW	HOT WATER
HX	HEAT EXCHANGER
I	POUNDS PER SQUARE INCH
ID	INSIDE DIAMETER
IN.	INCHES
KW	KILOWATT
LAT	LEAVING AIR TEMPERATURE
LAV	LAVATORY
LB	POUND WEIGHT
LWT	LEAVING WATER TEMPERATURE
MAX	MAXIMUM
MFR	MANUFACTURER
MIN	MINIMUM
(N)	NEW
N/A	NOT APPLICABLE
NC	NORMALLY CLOSED
NFPA	NATIONAL FIRE PROTECTION ASSOCIATION
NG	NATURAL GAS
NO	NORMALLY OPEN
NPT	NATIONAL PIPE THREAD
NTS	NOT TO SCALE
OAT	OUTSIDE AIR TEMPERATURE
OPNG	OPENING
OSA	OUTSIDE AIR
P	PUMP
POC	POINT OF CONNECTION
PRV	PRESSURE REDUCING VALVE / PRESSURE
PSI	POUNDS PER SQUARE INCH
PSIA	PSI - ABSOLUTE
PSIG	PSI - GAUGE
PVC	POLYVINYL CHLORIDE
QTY	QUANTITY
(R)	REMOVE
RA	RETURN AIR
RAH	RECIRC AIR HANDLER
RC	REHEAT COIL
RD	ROOF DRAIN
REF	ROOF EXHAUST FAN
SA	SUPPLY AIR / SOUND ATTENUATOR
SAT	SUPPLY AIR TEMPERATURE
SC	SCRUBBER
SCFM	STANDARD CUBIC FEET PER MINUTE
SCHD	SCHEDULE
SD	SMOKE DETECTOR
SFD	COMBINATION FIRE SMOKE DAMPER WITH ACCESS DOOR
SIM	SIMILAR
SMACNA	SHEET METAL AND AIR CONDITIONING CONTRACTORS NATIONAL ASSOCIATION
SMEF	SMOKE EXHAUST FAN
SPEC(S)	SPECIFICATION(S)
SS	STAINLESS STEEL
ST	SOUND ATTENUATOR TRAP
STD(S)	STANDARD(S)
TA	TRANSFER AIR
TE	TEMPERATURE ELEMENT
TEMP	TEMPERATURE
TI	TEMPERATURE INDICATOR
TOS	TOP OF STEEL
TYP	TYPICAL
UH	UNIT HEATER
UNO	UNLESS NOTED OTHERWISE
UR	URINAL
V	VOLTS
VAV	VARIABLE AIR VOLUME
VB	VACUUM BREAK
VERT	VERTICAL
VFD	VARIABLE FREQUENCY DRIVE
VTR	VENT THROUGH ROOF
VVR	VARIABLE VOLUME UNIT WITH REHEAT
W	WIDTH
W/O	WITHOUT
WB	WET BULB
WC	WATER CLOSET
WH	WATER HEATER
WLD	WELDED
WT	WEIGHT

OWNERSHIP OF INSTRUMENTS OF SERVICE

1 ALL REPORTS, DRAWINGS, SPECIFICATIONS, COMPUTER FILES, FIELD DATA, NOTES AND OTHER DOCUMENTS AND INSTRUMENTS PREPARED BY THE CONSULTANT AS INSTRUMENTS OF SERVICE SHALL REMAIN THE PROPERTY OF THE CONSULTANT. THE CONSULTANT SHALL RETAIN ALL COMMON LAW, STATUTORY AND OTHER RESERVED RIGHTS, INCLUDING THE COPYRIGHT THERETO.

2 THE CLIENT ACKNOWLEDGES THE CONSULTANT'S CONSTRUCTION DOCUMENTS, INCLUDING ELECTRONIC FILES, AS INSTRUMENTS OF PROFESSIONAL SERVICE. NEVERTHELESS, THE FINAL CONSTRUCTION DOCUMENTS PREPARED UNDER THIS AGREEMENT SHALL BECOME THE PROPERTY OF THE CLIENT UPON COMPLETION OF THE SERVICES AND PAYMENT IN FULL OF ALL MONIES DUE TO THE CONSULTANT. THE CLIENT SHALL NOT REUSE OR MAKE ANY MODIFICATION TO THE CONSTRUCTION DOCUMENTS WITHOUT THE PRIOR WRITTEN AUTHORIZATION OF THE CONSULTANT. THE CLIENT AGREES, TO THE FULLEST EXTENT PERMITTED BY LAW, TO INDEMNIFY AND HOLD HARMLESS THE CONSULTANT, ITS OFFICERS, DIRECTORS, EMPLOYEES AND SUBCONSULTANTS (COLLECTIVELY, CONSULTANT) AGAINST ANY DAMAGES, LIABILITIES OR COSTS, INCLUDING REASONABLE ATTORNEY'S FEES AND DEFENSE COSTS, ARISING FROM OR ALLEGEDLY ARISING FROM OR IN ANY WAY CONNECTED WITH THE UNAUTHORIZED REUSE OR MODIFICATION OF THE CONSTRUCTION DOCUMENTS BY THE CLIENT OR ANY PERSON OR ENTITY THAT ACQUIRES OR OBTAINS THE CONSTRUCTION DOCUMENTS FROM OR THROUGH THE CLIENT WITHOUT THE WRITTEN AUTHORIZATION OF THE CONSULTANT.

HVAC SYMBOLS AND LEGEND

DUCT

- SUPPLY AIR DUCT
- RETURN AIR DUCT
- EXHAUST AIR DUCT
- DUCT ELBOW WITH DUAL THICKNESS TURNING VANES
- RADIUS DUCT ELBOW
- SUPPLY AIR TERMINAL
- RETURN AIR TERMINAL
- EXHAUST AIR TERMINAL
- 24"x16" / 16"ø — RECTANGULAR TO ROUND TRANSITION
- 20"x12" EA (L) — DUCT WITH LINING (DIMENSIONS ARE I.D.)
- MOTORIZED DAMPERS (OPPOSED AND PARALLEL BLADE)
- BALANCING DAMPER
- FSD — FIRE SMOKE DAMPER SEE 7/M61

PIPE

- PIPE DROP
- PIPE RISE
- PIPE BRANCH RISE
- PIPE BRANCH DROP
- PIPE BRANCH TEE
- PIPE TEE RISE
- PIPE TEE DROP
- WYE STRAINER

PIPE LINE DESIGNATIONS

- R — REFRIGERANT PIPING

EQUIPMENT

- PUMP
- FAN (CENTRIFUGAL)

MISC.

- T (VAV-xx) — THERMOSTAT (WITH VAV BOX REFERENCE)
- T — TEMPERATURE SENSOR
- CO2 — CO2 SENSOR
- RH — HUMIDISTAT
- RH — RH SENSOR
- POINT OF CONNECTION
- POINT OF DISCONNECTION
- REVISION CLOUD AND DELTA
- CH / 1 — EQUIPMENT TYPE / EQUIPMENT NUMBER
- DIFFUSER GRILLE TAG:
  - A-24x24-120 — EQUIPMENT TYPE, NECK SIZE (RECT.), CFM
  - A-12ø-120 — CFM, NECK SIZE (ROUND), EQUIPMENT TYPE
- 1 / M6.02 — DETAIL DESIGNATION / SHEET NUMBER
- FLOW DIRECTION ARROW
- RETURN AIR FLOW DIRECTION

01 SHEET LIST - MECHANICAL

NUMBER	NAME
M01	MECHANICAL LEGEND, ABBREVIATIONS, AND GENERAL NOTES
M02	MECHANICAL SCHEDULES
M03	MECHANICAL SCHEDULES
M21	MECHANICAL LOWER LEVEL DEMO PLAN
M22	MECHANICAL FIRST FLOOR DEMO PLAN
M23	MECHANICAL MEZZANINE FLOOR DEMO PLAN
M24	MECHANICAL SECOND FLOOR DEMO PLAN
M25	MECHANICAL THIRD FLOOR DEMO PLAN
M31	MECHANICAL LOWER LEVEL PLAN
M32	MECHANICAL FIRST FLOOR PLAN
M33	MECHANICAL MEZZANINE FLOOR PLAN
M34	MECHANICAL SECOND FLOOR PLAN
M35	MECHANICAL THIRD FLOOR PLAN
M41	MECHANICAL SECTIONS
M51	MECHANICAL DIAGRAMS AND SCHEMATICS
M61	MECHANICAL DETAILS
M62	MECHANICAL DETAILS
M63	MECHANICAL DETAILS
M64	MECHANICAL DETAILS
M71	MECHANICAL CONTROLS
M72	MECHANICAL CONTROLS
M81	MECHANICAL T-24
M82	MECHANICAL T-24
M83	CALGREEN CHECKLIST
M84	CALGREEN CHECKLIST
M85	CALGREEN CHECKLIST

GENERAL NOTES

1 ALL REQUIREMENTS IN THE BOOK OF SPECIFICATIONS ARE PART OF THIS CONTRACT. REFER TO THE SPECIFICATIONS FOR INFORMATION NOT SHOWN ON THE DRAWINGS.

2 ALL WORK SHALL BE IN FULL ACCORDANCE WITH APPLICABLE LOCAL, STATE, AND FEDERAL CODES, LAWS AND REGULATIONS. ALL WORK AND MATERIALS SHALL BE IN FULL ACCORDANCE WITH THE 2013 TITLE 24 CALIFORNIA CODE OF REGULATIONS, INCLUDING BUT NOT LIMITED TO: CALIFORNIA BUILDING CODE (PART 2). CALIFORNIA ELECTRICAL CODE (PART 3), CALIFORNIA MECHANICAL CODE (PART 4), CALIFORNIA PLUMBING CODE (PART 5), CALIFORNIA ENERGY CODE (PART 6). CALIFORNIA FIRE CODE (PART 9).

3 ALL WORK SHALL BE IN FULL ACCORDANCE WITH THE FOLLOWING CODES, REGULATIONS AND STANDARDS: STATE FIRE MARSHAL REGULATIONS; THE SAFETY ORDERS OF THE DIVISION OF INDUSTRIAL SAFETY; THE NATIONAL ELECTRIC CODE (NEC); THE NATIONAL FIRE PROTECTION ASSOCIATION (NFPA); AMERICAN GAS ASSOCIATION (AGA); OCCUPATIONAL SAFETY AND HEALTH ACT (OSHA); AMERICAN SOCIETY OF HEATING,REFRIGERATION AND AIR-CONDITIONING ENGINEERS (ASHRAE); AMERICAN NATIONAL STANDARDS INSTITUTE (ANSI); AMERICAN SOCIETY OF MECHANICAL ENGINEERS (ASME); SHEET METAL AND AIR CONDITIONING CONTRACTORS NATIONAL ASSOCIATION (SMACNA); AMERICAN SOCIETY FOR TESTING AND MATERIALS (ASTM); INSTALLATION STANDARDS PUBLISHED BY THE INTERNATIONAL ASSOCIATION OF PLUMBING AND MECHANICAL OFFICIALS (IAPMO) AND OTHER APPLICABLE LAWS, CODES OR REGULATIONS. NOTHING IN THESE PERFORMANCE SPECIFICATIONS SHALL BE CONSTRUED TO PERMIT WORK NOT CONFORMING TO THESE CODES, REGULATIONS AND STANDARDS.

4 ALL MECHANICAL EQUIPMENT, FIXED OR FLEXIBLY MOUNTED, SHALL BE BRACED OR ANCHORED TO COMPLY WITH THE REQUIREMENTS OF TITLE 24.

5 CONTRACTORS SHALL VISIT SITE AND BE FULLY AWARE OF ALL CONDITIONS PRIOR TO SUBMITTING PROPOSAL.

6 CONTRACTOR SHALL OBTAIN AND PAY FOR ALL REQUIRED FEES, PERMITS AND INSPECTIONS.

7 COORDINATE ALL WORK WITH THE ARCHITECTURAL, STRUCTURAL DRAWINGS AND DRAWINGS OF OTHER TRADES. INSTALL ALL WORK TO CLEAR NEW AND EXISTING ARCHITECTURAL WORK, STRUCTURAL MEMBERS AND WORK OF OTHER TRADES. NO ITEM SUCH AS PIPE, DUCT, ETC., SHALL BE IN CONTACT WITH ANY EQUIPMENT. ANY ERRORS, OMISSIONS, DISCREPANCIES, DEFICIENCIES, OR CONFLICTS SHALL BE BROUGHT TO THE ATTENTION OF THE GENERAL CONTRACTOR, THE ARCHITECT AND THE ENGINEER PRIOR TO PROCEEDING WITH ANY AFFECTED WORK.

8 WHERE ANCHORAGE DETAILS ARE NOT SHOWN ON THE DRAWINGS THE FIELD INSTALLATION SHALL BE SUBJECT TO THE APPROVAL OF THE STRUCTURAL ENGINEER.

9 COORDINATE ALL CUTTING AND PATCHING WITH THE GENERAL CONTRACTOR. SUB CONTRACTOR SHALL BE RESPONSIBLE FOR ALL CUTTING AND PATCHING REQUIRED FOR HIS WORK. OBTAIN WRITTEN PERMISSION FROM THE ARCHITECT BEFORE PROCEEDING WITH ANY CUTTING OR ALTERATION OF STRUCTURAL MEMBERS.

10 CONTRACTOR SHALL FURNISH AND INSTALL ALL MATERIALS, EQUIPMENT AND LABOR NECESSARY TO ENSURE THE INSTALLATION OF COMPLETE AND FULLY FUNCTIONING SYSTEMS.

11 GUARANTEE ALL WORK AND MATERIALS FOR TWO YEARS FROM THE DATE OF FILING NOTICE OF COMPLETION.

12 RESTORE ALL DAMAGE RESULTING FROM YOUR WORK AND LEAVE PREMISES IN CLEAN CONDITION WHEN FINISHED WITH WORK.

13 CONNECT ALL EQUIPMENT FURNISHED UNDER OTHER TRADES AS SHOWN OR AS REQUIRED.

14 NOTIFY OWNER 48 HOURS IN ADVANCE BEFORE ANY SYSTEM SHUTDOWN. COORDINATE ALL SHUTDOWNS WITH THE BUILDING ENGINEER.

15 PROVIDE TWO SETS OF "AS-BUILT" FULL SIZE DRAWINGS AND TWO BOUND SETS OF ALL OPERATION MANUALS, DIAGRAMS, SERVICE CONTRACTS, GUARANTEES, ETC., ONE SET SHALL BE DELIVERED TO THE OWNER AND ONE SET TO THE BUILDING OPERATIONS DEPARTMENT.

16 PROVIDE AND COORDINATE WITH THE ARCHITECT THE INSTALLATION OF ACCESS PANELS AS REQUIRED FOR MAINTENANCE AND INSPECTION OF ALL EQUIPMENT AND DEVICES. MINIMIZE NUMBER & LOCATION OF ACCESS PANELS BY POSITIONING PANELS TO ALLOW ACCESS TO MULTIPLE DEVICES. MECHANICAL LAYOUT SHALL ALSO BE DONE TO MINIMIZE ACCESS PANELS.

17 OBTAIN A COMPLETE SET OF AS-BUILT DRAWINGS OF EXISTING CONDITIONS FROM THE OWNERS FOR INFORMATION OF EXISTING CONDITIONS.

18 EACH SYSTEM OF PIPING AND DUCTWORK SHALL BE CLEANED OF ALL FOREIGN MATERIAL AND BURRS AND ROUGH SPOTS PRIOR TO BEING PLACED IN SERVICE AND BEFORE OPERATIONAL TESTS ARE PERFORMED.

19 EACH SYSTEM OF PIPING AND DUCTWORK SHALL BE PRESSURE TESTED IN ACCORDANCE WITH RECOGNIZED INDUSTRY STANDARDS.

20 GENERAL CONTRACTOR SHALL RETAIN INDEPENDENT TESTING AGENCY FOR TESTING AND BALANCING AIR AND HYDRONIC SYSTEMS. BALANCE AIR FLOW AT ALL OPENINGS TO AIR QUANTITIES INDICATED. BALANCE WATER FLOW AT ALL EQUIPMENT TO GPM INDICATED. AGENCY SHALL BE MEMBER OF AABC. SUBMIT FINAL BALANCE REPORT FOR REVIEW.

21 DURING ENTIRE CONSTRUCTION PERIOD, THE CONTRACTOR SHALL MAINTAIN ADEQUATE FIRE EXTINGUISHERS AT THE SITE, RELAY FOR USE IN CASE OF FIRE.

22 CONTRACTOR SHALL PROTECT THE PUBLIC FROM INJURY DURING THE PROCESS OF WORK BY POSTING WARNING SIGNS AND INSTALLING GUARD LIGHTS AND BARRICADES.

23 ALL DUCTS, PIPES AND EQUIPMENT SHALL BE CONCEALED ABOVE CEILING, UNLESS OTHERWISE NOTED.

24 MAXIMUM ALLOWABLE LENGTH OF FLEXIBLE DUCT: 5'-0".

25 SEAL AROUND ALL PIPES AND DUCTS PENETRATING FIRE SEPARATIONS WITH NON-COMBUSTIBLE PACKING RETAINED BY METAL COLLARS. THE ASSEMBLY SHALL BE APPROVED BY STATE FIRE MARSHAL.

26 CONNECTION BETWEEN COPPER AND IRON OR STEEL PIPE SHALL BE MADE WITH RED BRASS NIPPLES.

27 ALL DUCTS PASSING THRU FIRE WALLS SHALL HAVE DAMPERS THAT COMPLY WITH THE UL STANDARDS 555 AND 555S STATE FIRE MARSHAL.

28 SLOPE ALL RUNOUTS TO EQUIPMENT AND RISERS, UP IN THE DIRECTION OF FLOW.

29 SLOPE ALL HEATING WATER, CHILLED WATER AND CONDENSER WATER MAINS AND BRANCHES UP TOWARD VENTED RISERS, ONE INCH IN 40 FEET MINIMUM.

30 PROVIDE A VALVED DRAIN AT THE LOW POINT IN EACH PIPING SYSTEM. PROVIDE AIR VENT AT EACH HIGH POINT IN THE PIPING SYSTEM. COORDINATE ACCESS PANEL LOCATIONS, IF REQUIRED, PRIOR TO SUBMISSION OF HYDRONIC SHOP DRAWINGS FOR APPROVAL.

31 ALL VALVES AND OTHER PIPING SYSTEM SPECIALTIES SHALL BE FULL LINE SIZES, UNLESS OTHERWISE INDICATED.ALL VALVES AND OTHER PIPING SYSTEM SPECIALTIES SHALL BE FULL LINE SIZES, UNLESS OTHERWISE INDICATED.

32 REDUCTIONS IN PIPE SIZES OF HEATING, CHILLED OR CONDENSER WATER AND WATER SHALL BE MADE WITH ECCENTRIC REDUCERS TOP SIDE FLAT. BUSHING SHALL NOT BE USED. PIPE SIZE REDUCTIONS SHALL BE MADE WITHIN 6" OF CONNECTION TO EQUIPMENT.

33 PROVIDE REMOTE EXTENDED LUBRICATING FITTINGS FOR ALL SYSTEMS SO THAT LUBRICATION CAN BE ACCOMPLISHED WITHOUT OPENING PLENUM DOORS OR EQUIPMENT ACCESS PANELS.

34 HANG RIBBONS FROM ALL ITEMS REQUIRING ACCESS (EXISTING IN THE AREA OF CONSTRUCTION AND NEW) PRIOR TO INSTALLATION OF CEILING.

35 INSTALL ALL DUCTWORK AND PIPING AS HIGH AS POSSIBLE ABOVE FINISHED FLOOR. PROVIDE AND INSTALL ALL NECESSARY OFFSETS TO MAINTAIN MINIMUM 7" CLEARANCE ABOVE FINISHED CEILING WHERE POSSIBLE.

36 SHOP DRAWINGS SHALL BE REVIEWED AND APPROVED BY THE MECHANICAL ENGINEER PRIOR TO CONSTRUCTION.

37 EXISTING PIPE OR DUCT SUPPORTS SHALL NOT BE REUSED WITHOUT THE APPROVAL OF STRUCTURAL ENGINEER.

38 ALL PIPE ELEVATIONS ARE BOP (BOTTOM OF PIPE) UNLESS NOTED OTHERWISE.

39 WHERE PIPES AND DUCTS PENETRATE WALL, SEAL OPENINGS TO PREVENT AIR TRANSFER BETWEEN SPACES. USE FIRE RATED SEALANTS ON ALL FIRE SEPARATION PENETRATIONS, INCLUDING FLOORS.

40 ALL SUPPORTS, SPACE ARRANGEMENTS, EQUIPMENT FOOTPRINTS, AND EQUIPMENT PADS ARE BASED ON PRELIMINARY INFORMATION FROM THE MANUFACTURER. THE CONTRACTOR SHALL BE RESPONSIBLE FOR CHECKING DATA FROM CERTIFIED DRAWINGS SUBMITTED BY MANUFACTURER AND SHALL MAKE MODIFICATIONS REQUIRED.

41 ALL DUCT DIMENSIONS ARE SHOWN IN INCHES.

42 REFER TO SPECIFICATIONS FOR DUCT LEAKAGE REQUIREMENTS.

43 THE CONSTRUCTION DOCUMENTS FOR THIS PROJECT WERE PREPARED BY THE DESIGN TEAM USING 3-D MODELING SOFTWARE. USING THIS SOFTWARE BY THE DESIGN TEAM DOES NOT RELIEVE THE CONTRACTOR FROM PERFORMING THE NECESSARY COORDINATION TO PROVIDE COMPLETE, CODE COMPLIANT AND OPERATIONAL BUILDING SYSTEMS. THE PLANS AND SECTIONS PROVIDED ARE NOT COMPLETE AND ARE TO BE CONSIDERED DIAGRAMMATIC ONLY. THE EXACT LOCATION OF THE PIPING, DUCTWORK, ELECTRICAL AND SUPPORT COMPONENTS ARE TO BE DETERMINED IN THE FIELD. ALL BUILDING SECTIONS AND DETAILS PROVIDED ARE FOR INFORMATION ONLY AND DO NOT RELIEVE THE CONTRACTOR FROM PERFORMING FINAL COORDINATION. CONTRACTOR IS RESPONSIBLE FOR COORDINATING WITH ALL OTHER TRADES.

KOMOROUS-TOWEY ARCHITECTS
410 TWELFTH STREET, SUITE 300
OAKLAND, CA 94612
Ph: 510.446.2244 Fx: 510.446.2242
kta@ktarch.com www.ktarch.com

INTEGRAL GROUP
427 13th Street
Oakland, CA 94612
510 663-2070
510 663-2080 fax
www.integralgroup.com

REGISTERED PROFESSIONAL ENGINEER
JOHN P. McDONALD
No. M 30438
Exp. 12-31-17
MECHANICAL
STATE OF CALIFORNIA

MECHANICAL LEGEND, ABBREVIATIONS, AND GENERAL NOTES

ITD HEADQUARTERS
393 13TH STREET
OAKLAND, CA 94612

BID SET

REVISIONS

No	Desc	Date
1	65% CD Set	2016-08-01
2	95% CD Set	2016-10-31
3	Bid Set	2016-11-15

© COPYRIGHT 2016

DATE: 03/31/2017
DRAWN BY: JM, EC
PROJECT NO.: 1203.22

M01

15XXX 13th Street
3/28/2017 4:07:42 PM
C:\Users\apazcoguin\Documents\IG - MEP - 13th Street - 16_apazcoguin.rvt

MECHANICAL - AHU FULL SCHEDULE PART 1

TYPE	EQUIPMENT NUMBER	MANUFACTURER	MODEL	LEVEL	LOCATION	SERVICE	MAXIMUM FACE VELOCITY	DESIGN OUTSIDE AIR FLOW	COOLING DESIGN OA TEMPERATURE	COOLING DESIGN OA WB TEMPERATURE	HEATING DESIGN OA TEMPERATURE	FANS																			
												SUPPLY FANS										EXHAUST FANS									
												SA - NO OF FANS	SA - TYPE	SA - ESP	SA - TSP	SA - FAN RPM	SA - MOTOR HP	SA - BHP	SA - NO OF MOTORS	SA - VFD Y/N	SA - EFF	EA - NO OF FANS	EA - TYPE	EA - ESP	EA - TSP	EA - BHP	EA - FAN RPM	EA - MOTOR HP	EA - NO OF MOTORS	EA - VFD Y/N	EA - EFF
AHU	1	AAON	RNA 30	THIRD FLOOR	LEVEL 3	BUILDING	300 FPM	8,620 CFM	89.0 °F	66.0 °F	37.0 °F	2	PLENUM	2.5 in-wg	4.7 in-wg	1800	7.5 hp	5.5 hp	2	Yes	0.6	1	PLENUM	1.0 in-wg	2.2 in-wg	5.1 hp	1800	7.5 hp	1	Yes	0.6

MECHANICAL - AHU FULL SCHEDULE PART 2

TYPE	EQUIPMENT NUMBER	HEAT PUMP COOLING							HEAT PUMP HEATING							HEAT WHEEL																			
																SUMMER										WINTER									
		TOTAL CAPACITY	SENSIBLE CAPACITY	EAT DB	EAT WB	LAT DB	LAT WB	APD [in wg]	CAPACITY	OA TEMP	EAT DB	EAT WB	LAT DB	LAT WB	APD	COOLING CAPACITY SUMMER	EA DB	EA WB	OA DB	OA WB	RA DB	RA WB	SA DB	SA WB	PRESS DROP	HEATING CAPACITY	EA DB	EA WB	OA DB	OA WB	RA DB	RA WB	SA DB	SA WB	PRESS DROP	ERW NO OF WHEELS	ERW FAN RPM	ERW MOTOR HP	ERW NO OF MOTOR
AHU	1	288,650 Btu/h	255,780 Btu/h	79.2 °F	63.8 °F	52.5 °F	52.4 °F	0.2 in-wg	270,800 Btu/h	37.0 °F	63.6 °F	48.5 °F	87.3 °F	58.3 °F	0.2 in-wg	97,000 Btu/h	84.8 °F	66.6 °F	89.0 °F	67.0 °F	75.0 °F	63.0 °F	79.2 °F	63.8 °F	0.9 in-wg	260,200 Btu/h	48.4 °F	48.4 °F	37.0 °F	35.0 °F	75.0 °F	63.0 °F	63.6 °F	48.5 °F	0.9 in-wg	2	1075	0.2 hp	2

MECHANICAL - AHU FULL SCHEDULE PART 3

TYPE	EQUIPMENT NUMBER	FILTERS						CONDENSER			COMPRESSOR		COP	EER	OPERATING WEIGHT	UNIT ELECTRICAL DATA						UNIT DIMENSIONS			NOTES
		MERV 8 PREFILTER			MERV 13 FINAL FILTER																				
		MERV RATING	CLEAN APD	DIRTY APD	MERV RATING	CLEAN APD	DIRTY APD	CONDENSER FAN QTY	REFRIGERANT	CONDENSER FAN HP	COMPRESSOR QTY	MOTOR RLA				FLA	MCA	MOCP	VOLT	PHASE	FREQUENCY	L	W	H	
AHU	1	8	0.3 in-wg	0.5 in-wg	13	0.3 in-wg	0.5 in-wg	4	R-410A	559 W	4	10 A	4.59	10	6707 lb	82 A	85 A	90 A	460 V	3	60 Hz	16' - 7"	5' - 5"	5' - 0"	1-7

1. 100% HEAT RECOVERY OUTDOOR AIR UNIT. HEAT RECOVERY WITH BYPASS.
2. OUTDOOR AIR INTAKE WEATHERHOOD.
3. DIRECT DRIVE FAN MOTOR.
4. NEMA PREMIUM EFFICIENCY MOTORS ONLY.
5. AIR HANDLER MOUNTED ON EXISTING ELEVATED PLATFORM. INCLUDE BASE RAILS. COORDINATE WITH STRUCTURAL.
6. LISTED HEIGHT DOES NOT INCLUDE ELEVATED PLATFORM.
7. INCLUDE CONTROLLER EXPANSION MODULE.

MECHANICAL - SUPPLY VAV SCHEDULE

TYPE	MARK	MANUFACTURER	MODEL	INLET SIZE	SERVICE	AIRFLOW		MAX TOTAL PRESS. DROP	NOTES
						DESIGN VENTILATION AIRFLOW	MINIMUM VENTILATION AIRFLOW		
VAV-SA	1-1	TITUS	DESV	8"	103 LIBRARY	425 CFM	425 CFM	0.5 in-wg	1-5
VAV-SA	1-2	TITUS	DESV	4"	107 ISG STAGING	90 CFM	90 CFM	0.5 in-wg	1-5
VAV-SA	1-3	TITUS	DESV	4"	111 CONF	150 CFM	30 CFM	0.5 in-wg	1-5
VAV-SA	1-4	TITUS	DESV	4"	112 CONTRACTORS	75 CFM	75 CFM	0.5 in-wg	1-5
VAV-SA	1-5	TITUS	DESV	10"	113 OPEN OFFICE	1,095 CFM	1,095 CFM	0.5 in-wg	1-5
VAV-SA	1-6	TITUS	DESV	4"	114 CONF	150 CFM	50 CFM	0.5 in-wg	1-5
VAV-SA	1-7	TITUS	DESV	8"	119 BMD UTILTIES, 122 COFFEE	435 CFM	435 CFM	0.5 in-wg	1-5
VAV-SA	1-8	TITUS	DESV	8"	121 OFFICE, 128 VIDEO CONTROL, 129 VIDEO STUDIO	240 CFM	240 CFM	0.5 in-wg	1-5
VAV-SA	1-9	TITUS	DESV	4"	127 CONF	90 CFM	15 CFM	0.5 in-wg	1-5
VAV-SA	2-1	TITUS	DESV	4"	204 OFFICE	45 CFM	45 CFM	0.5 in-wg	1-5
VAV-SA	2-2	TITUS	DESV	4"	205 CONF	135 CFM	35 CFM	0.5 in-wg	1-5
VAV-SA	2-3	TITUS	DESV	4"	211 LOBBY, 216 COFFEE, 218 HOTELING	175 CFM	175 CFM	0.5 in-wg	1-5
VAV-SA	2-4	TITUS	DESV	8"	215 CONF TRAINING	345 CFM	110 CFM	0.5 in-wg	1-5
VAV-SA	2-5	TITUS	DESV	6"	217 STADIUM CONF	240 CFM	40 CFM	0.5 in-wg	1-5
VAV-SA	2-6	TITUS	DESV	6"	228 CONF LARGE	300 CFM	80 CFM	0.5 in-wg	1-5
VAV-SA	3-1	TITUS	DESV	10"	214 OPEN OFFICE, 223 ITD STORE, 224 LOBBY, 225 VESTIBULE, 226 RECEPTION	1,010 CFM	1,010 CFM	0.5 in-wg	1-5
VAV-SA	3-2	TITUS	DESV	4"	306 CONF	90 CFM	20 CFM	0.5 in-wg	1-5
VAV-SA	3-3	TITUS	DESV	6"	313 OPEN OFFICE	330 CFM	330 CFM	0.5 in-wg	1-5
VAV-SA	3-4	TITUS	DESV	6"	317 OPEN OFFICE	270 CFM	270 CFM	0.5 in-wg	1-5
VAV-SA	4-1	TITUS	DESV	8"	401 COFFEE, 406 LOBBY, 411 BREAK, 412 CONTRACTORS, 415 OFFICE	420 CFM	420 CFM	0.5 in-wg	1-5
VAV-SA	4-2	TITUS	DESV	4"	417 CONF	105 CFM	20 CFM	0.5 in-wg	1-5
VAV-SA	4-3	TITUS	DESV	4"	420 CONF	150 CFM	30 CFM	0.5 in-wg	1-5
VAV-SA	4-4	TITUS	DESV	4"	419 OFFICE, 420 OFFICE, 421 OFFICE	165 CFM	165 CFM	0.5 in-wg	1-5
VAV-SA	4-5	TITUS	DESV	10"	424 OPEN OFFICE	995 CFM	995 CFM	0.5 in-wg	1-5
VAV-SA	5-1	TITUS	DESV	10"	503 MECH, 506 BREAKROOM	1,080 CFM	1,080 CFM	0.5 in-wg	1-5

1. PRESSURE INDEPENDENT ELECTRONIC CONTROLS.
2. MIN 10' - 0" ACOUSTIC LINED PLENUM AFTER BOX.
3. VAV BOX DAMPERS SHALL FAIL OPEN UPON LOSS OF POWER (SPRING OPEN, POWER CLOSED).
4. PROVIDE AIRFLOW SENSOR FOR EACH BOX.
5. DEDICATED OUTSIDE AIR SYSTEM IS CONSTANT VOLUME FOR ALL NON-DCV SPACES. FOR DCV SPACES, MINIMUM AIRFLOW IS MINIMUM VENTILATION FOR UNOCCUPIED HOURS. FOR DCV SPACES, BOX SHALL TURN DOWN TO MIN AIRFLOW WHEN SPACE IS UNOCCUPIED.

MECHANICAL - EXHAUST VALVE SCHEDULE

TYPE	MARK	MANUFACTURER	MODEL	INLET SIZE	SERVICE	AIRFLOW		MAX TOTAL PRESS. DROP	NOTES
						MAX AIRFLOW	MINIMUM AIRFLOW		
VAV-EA	1-1	TITUS	DESV	8"	1 GENERAL EXHAUST	735 CFM	735 CFM	0.5 in-wg	1-5
VAV-EA	1-2	TITUS	DESV	6"	101 STORAGE	80 CFM	80 CFM	0.5 in-wg	1-5
VAV-EA	1-3	TITUS	DESV	4"	111 CONF	150 CFM	30 CFM	0.5 in-wg	1-5
VAV-EA	1-4	TITUS	DESV	4"	114 CONF	150 CFM	50 CFM	0.5 in-wg	1-5
VAV-EA	1-5	TITUS	DESV	14"	115 MENS, 116 WOMENS, 119 BMD UTILITIES, 120 JANITOR, 122 COFFEE LOUNGE, 126 ELECTRIC	1,560 CFM	1,560 CFM	0.5 in-wg	1-5
VAV-EA	1-6	TITUS	DESV	4"	127 CONF	90 CFM	15 CFM	0.5 in-wg	1-5
VAV-EA	2-1	TITUS	DESV	8"	2 GENERAL EXHAUST	370 CFM	370 CFM	0.5 in-wg	1-5
VAV-EA	2-2	TITUS	DESV	4"	205 CONF	135 CFM	35 CFM	0.5 in-wg	1-5
VAV-EA	2-3	TITUS	DESV	8"	215 CONF TRAINING	345 CFM	110 CFM	0.5 in-wg	1-5
VAV-EA	2-4	TITUS	DESV	6"	203 JANITOR, 208 SHOWER, 210 LOCKERS	315 CFM	315 CFM	0.5 in-wg	1-5
VAV-EA	2-5	TITUS	DESV	8"	219 MENS, 220 WOMENS	400 CFM	400 CFM	0.5 in-wg	1-5
VAV-EA	2-6	TITUS	DESV	4"	216 COFFEE, 218 HOTELING	145 CFM	145 CFM	0.5 in-wg	1-5
VAV-EA	2-7	TITUS	DESV	6"	217 STADIUM CONF	240 CFM	40 CFM	0.5 in-wg	1-5
VAV-EA	2-8	TITUS	DESV	6"	228 CONF LARGE	300 CFM	80 CFM	0.5 in-wg	1-5
VAV-EA	3-1	TITUS	DESV	6"	3 MEZZANINE GENERAL EXHAUST	250 CFM	250 CFM	0.5 in-wg	1-5
VAV-EA	3-2	TITUS	DESV	8"	303 WORK ROOM, 309 WOMENS, 309 MENS, 314 JANITOR	350 CFM	350 CFM	0.5 in-wg	1-5
VAV-EA	3-3	TITUS	DESV	4"	306 CONF	90 CFM	20 CFM	0.5 in-wg	1-5
VAV-EA	4-1	TITUS	DESV	6"	4 GENERAL EXHAUST	345 CFM	345 CFM	0.5 in-wg	1-5
VAV-EA	4-2	TITUS	DESV	12"	401 COFFEE, 402 MENS, 403 WOMENS, 404 ELECTRIC, 405 JANITOR	1,235 CFM	1,235 CFM	0.5 in-wg	1-5
VAV-EA	4-3	TITUS	DESV	4"	417 CONF	105 CFM	20 CFM	0.5 in-wg	1-5
VAV-EA	4-4	TITUS	DESV	4"	420 CONF	150 CFM	30 CFM	0.5 in-wg	1-5
VAV-EA	5-1	TITUS	DESV	8"	506 BREAK ROOM	420 CFM	420 CFM	0.5 in-wg	1-5
VAV-EA	5-2	TITUS	DESV	8"	501 STORAGE, 502 BMD STORAGE, 503 MECH, 507 WOMENS, 508 JANITOR, 510 MENS, 513 ELECTRICAL	660 CFM	660 CFM	0.5 in-wg	1-5

1. PRESSURE INDEPENDENT ELECTRONIC CONTROLS.
2. MIN 10' - 0" ACOUSTIC LINED PLENUM AFTER BOX.
3. VAV BOX DAMPERS SHALL FAIL OPEN UPON LOSS OF POWER (SPRING OPEN, POWER CLOSED).
4. PROVIDE AIRFLOW SENSOR FOR EACH BOX.
5. DEDICATED OUTSIDE AIR SYSTEM IS CONSTANT VOLUME FOR ALL NON-DCV SPACES. FOR DCV SPACES, MINIMUM AIRFLLOW IS MINIMUM VENTILATION FOR UNOCCUPIED HOURS. FOR DCV SPACES, BOX SHALL TURN DOWN TO MIN AIRFLOW WHEN SPACE IS UNOCCUPIED.

MECHANICAL - AIR TERMINAL SCHEDULE

TYPE	MANUFACTURER	MODEL	TYPE	FACE SIZE	CONNECTOR SIZE	NOTES
A	PRICE	PDS	PERFORATED SUPPLY	24" X 24"	SEE DRAWINGS	1,2
B	PRICE	PDR	PERFORATED SUPPLY	12" X 12"	SEE DRAWINGS	1,2
C	TITUS	MB-30	MODU-BLOCK SUPPLY	24" X 24"	SEE DRAWINGS	1,2
D	TITUS	FL-20	LINEAR SLOT SUPPLY	2 SLOT, 2.5" SLOT WIDTH, 60" LENGTH	12"	1,2, 3
E	PRICE	PDR	PERFORATED EXHAUST	24" X 24"	SEE DRAWINGS	1,2
F	PRICE	PDR	PERFORATED EXHAUST	12" X 12"	SEE DRAWINGS	1,2
G	PRICE	PDR	PERFORATED RETURN	24" X 24"	SEE DRAWINGS	1,2
H	PRICE	PDR	PERFORATED RETURN	12" X 12"	SEE DRAWINGS	1,2
I	PRICE	700	SIDEWALL LOUVER SUPPLY	SEE DRAWINGS	SEE DRAWINGS	1,2, 4
J	PRICE	700	SIDEWALL LOUVER RETURN	SEE DRAWINGS	SEE DRAWINGS	1,2, 4

1. SEE DRAWINGS FOR DUCT CONNECTION SIZE.
2. COORDINATE WITH ARCHITECT FOR FINISHES.
3. PROVIDE MANUFACTURER'S PLENUM.
4. WITH OPPOSED BLADE DAMPER.

MECHANICAL - FAN SCHEDULE

TYPE	MARK	MANUFACTURER	MODEL	FAN TYPE	LOCATION	SERVICE	FAN			MOTOR	ELECTRICAL					DIMENSIONS			OPERATING WEIGHT	NOTES
							AIR FLOW	TSP	SPEED [RPM]	W	MCA	VOLT	PHASE	FREQUENCY	EMERGENCY POWER [Y/N]	L	W	H		
F	1-1	PANASONIC	WHISPERGREEN SELECT	CEILING MOUNTED	LOWER LEVEL	HUDDLE ROOM 123	30 CFM	0.25 in-wg	1072	9 W	0.27 A	120 V	1	60 Hz	No	1' - 1"	1' - 1"	0' - 7 1/2"	12 lb	1-2
F	1-2	PANASONIC	WHISPERGREEN SELECT	CEILING MOUNTED	LOWER LEVEL	HUDDLE ROOM 123	30 CFM	0.25 in-wg	1072	9 W	0.27 A	120 V	1	60 Hz	No	1' - 1"	1' - 1"	0' - 7 1/2"	12 lb	1-2
F	1-3	PANASONIC	WHISPERGREEN SELECT	CEILING MOUNTED	LOWER LEVEL	HUDDLE ROOM 108	30 CFM	0.25 in-wg	1072	9 W	0.27 A	120 V	1	60 Hz	No	1' - 1"	1' - 1"	0' - 7 1/2"	12 lb	1-2
F	1-4	PANASONIC	WHISPERGREEN SELECT	CEILING MOUNTED	LOWER LEVEL	HUDDLE ROOM 104	45 CFM	0.25 in-wg	1072	9 W	0.27 A	120 V	1	60 Hz	No	1' - 1"	1' - 1"	0' - 7 1/2"	12 lb	1-2
F	1-5	GREENHECK	CSP-A250	INLINE	LOWER LEVEL	VIDEO STUDIO 129	150 CFM	0.50 in-wg	1072	59 W	0.79 A	120 V	1	60 Hz	No	1' - 4"	1' - 2"	1' - 0"	23 lb	1
F	2-1	PANASONIC	WHISPERGREEN SELECT	CEILING MOUNTED	LEVEL 1	HUDDLE ROOM 206	30 CFM	0.25 in-wg	1072	9 W	0.27 A	120 V	1	60 Hz	No	1' - 1"	1' - 1"	0' - 7 1/2"	12 lb	1-2
F	2-2	PANASONIC	WHISPERGREEN SELECT	CEILING MOUNTED	LEVEL 1	HUDDLE ROOM 207	30 CFM	0.25 in-wg	1072	9 W	0.27 A	120 V	1	60 Hz	No	1' - 1"	1' - 1"	0' - 7 1/2"	12 lb	1-2
F	2-3	PANASONIC	WHISPERGREEN SELECT	CEILING MOUNTED	LEVEL 1	HUDDLE ROOM 209	30 CFM	0.25 in-wg	1072	9 W	0.27 A	120 V	1	60 Hz	No	1' - 1"	1' - 1"	0' - 7 1/2"	12 lb	1-2
F	3-1	PANASONIC	WHISPERGREEN SELECT	CEILING MOUNTED	MEZZANINE	HUDDLE ROOM 307	30 CFM	0.25 in-wg	1072	9 W	0.27 A	120 V	1	60 Hz	No	1' - 1"	1' - 1"	0' - 7 1/2"	12 lb	1-2
F	3-2	PANASONIC	WHISPERGREEN SELECT	CEILING MOUNTED	MEZZANINE	HUDDLE ROOM 305	30 CFM	0.25 in-wg	1072	9 W	0.27 A	120 V	1	60 Hz	No	1' - 1"	1' - 1"	0' - 7 1/2"	12 lb	1-2
F	4-1	PANASONIC	WHISPERGREEN SELECT	CEILING MOUNTED	LEVEL 2	HUDDLE ROOM 416	30 CFM	0.25 in-wg	1072	9 W	0.27 A	120 V	1	60 Hz	No	1' - 1"	1' - 1"	0' - 7 1/2"	12 lb	1-2
F	4-2	PANASONIC	WHISPERGREEN SELECT	CEILING MOUNTED	LEVEL 2	HUDDLE ROOM 414	30 CFM	0.25 in-wg	1072	9 W	0.27 A	120 V	1	60 Hz	No	1' - 1"	1' - 1"	0' - 7 1/2"	12 lb	1-2
F	4-3	PANASONIC	WHISPERGREEN SELECT	CEILING MOUNTED	LEVEL 2	LACTATION REFUGE 426	30 CFM	0.25 in-wg	1072	9 W	0.27 A	120 V	1	60 Hz	No	1' - 1"	1' - 1"	0' - 7 1/2"	12 lb	1-2

1. PROVIDE EC MOTOR.
2. INTEGRATED MULTI-SPEED WITH TIME DELAY MODULE.

MECHANICAL - CEILING FAN SCHEDULE

TYPE	MARK	MANUFACTURER	MODEL	LOCATION	FAN				ELECTRICAL							OPERATING WEIGHT	NOTES
					DIAMETER	MAXIMUM RPM	MINIMUM RPM	REVERSIBLE DIRECTION	MAXIMUM POWER	MINIMUM POWER	MAXIMUM AMPS	MINIMUM AMPS	VOLT	PHASE	FREQUENCY		
CF	1	BIG ASS FANS	HAIKU 84 IN	MEZZANINE	7' - 0"	141	44	YES	64 W	4 W	0.53 A	0.07 A	120 V	1	60 Hz	25 lb	1-6

1. REFER TO PLANS FOR LOCATIONS.
2. CONFIRM FINISH WITH ARCHITECT.
3. PROVIDE MANUFACTURER'S WIRELESS WALL CONTROLLERS. ONE WALL CONTROLLER PER ROOM. REFER TO ARCH DRAWINGS FOR LOCATION.
4. NO LED LIGHT.
5. MINIMUM 7 SPEED FAN CONTROL.
6. PROVIDE WITH UNIVERSAL MOUNT WITH 7" EXTENSION TUBE LENGTH.

KOMOROUS-TOWEY ARCHITECTS
410 TWELFTH STREET, SUITE 300
OAKLAND, CA 94612
Ph: 510.446.2244 Fx: 510.446.2242
kta@kitarch.com www.kitarch.com

INTEGRAL GROUP
427 13th Street
Oakland, CA 94612
510 663-2070
510 663-2080 fax
www.integralgroup.com

REGISTERED PROFESSIONAL ENGINEER
JOHN P. McDONALD
No. M 30438
Exp. 12-31-17
MECHANICAL
STATE OF CALIFORNIA

MECHANICAL SCHEDULES

ITD HEADQUARTERS

393 13TH STREET
OAKLAND, CA 94612

BID SET

REVISIONS

No	Desc	Date
1	65% CD Set	2016-08-01
2	95% CD Set	2016-10-31
3	Bid Set	2016-11-15

© COPYRIGHT 2016

DATE: 03/31/2017

DRAWN BY: JM, EC

PROJECT NO.: 1203.22

M02

1500K 13th Street
3/28/2017 4:07:47 PM
C:\Users\spazzoguin\Documents\IG - MEP - 13th Street - 16_spazzoguin.rvt

MECHANICAL - AIR SOURCE HEAT PUMP

TYPE	MARK	MANUFACTURER	MODEL	LOCATION	TYPE	SERVICE	REFRIGERANT TYPE	REFRIGERANT QTY [LBS]	FAN CFM	FAN ESP	COOLING TOTAL CAPACITY	COOLING MIN. EER	HEATING TOTAL CAPACITY	HEATING MIN. COP	ELECTRICAL SNGLE POINT OF CONN Y/N	ELECTRICAL VOLT	ELECTRICAL PHASE	ELECTRICAL FREQUENCY	ELECTRICAL MCA	ELECTRICAL MOCP	ELECTRICAL EMERGENCY POWER	CONDENSER FAN QTY.	COMPRESSOR QTY.	DIMENSIONS W	DIMENSIONS L	DIMENSIONS H	OPERATING WEIGHT	NOTES
ASHP	1	MITSUBISHI	PURY-P144YLMU-A	THIRD FLOOR	HEAT RECOVERY	LOWER LEVEL	R-410A	23	11,300 CFM	0.0 in-wg	144,000 Btu/h	14.0	160,000 Btu/h	3.72	No	460 V	3	60 Hz	24 A	35 A	No	2	1	2' - 6"	5' - 9"	5' - 5"	730 lb	1-2
ASHP	2	MITSUBISHI	PURY-P120YLMU-A	THIRD FLOOR	HEAT RECOVERY	LEVEL 1	R-410A	23	11,300 CFM	0.0 in-wg	120,000 Btu/h	14.7	135,000 Btu/h	3.99	No	460 V	3	60 Hz	19 A	30 A	No	2	1	2' - 6"	5' - 9"	5' - 5"	730 lb	1-2
ASHP	3	MITSUBISHI	PURY-P168YLMU-A	THIRD FLOOR	HEAT RECOVERY	MEZZANINE	R-410A	30	13,100 CFM	0.0 in-wg	168,000 Btu/h	12.6	188,000 Btu/h	3.77	No	460 V	3	60 Hz	26 A	45 A	No	2	2	2' - 6"	7' - 2"	5' - 5"	1008 lb	1-2
ASHP	4	MITSUBISHI	PURY-P336YSLMU-A	THIRD FLOOR	HEAT RECOVERY	LEVELS 2 AND 3	R-410A	46	22,600 CFM	0.0 in-wg	336,000 Btu/h	9.7	378,000 Btu/h	3.23	No	460 V	3	60 Hz	62 A	100 A	No	4	2	2' - 6"	11' - 6"	5' - 5"	1460 lb	1-2

1. HIGH EFFICIENCY, VARIABLE REFRIGERANT FLOW UNIT ONLY.
2. LISTED HEIGHT DOES NOT INCLUDE SLEEPER MOUNT.

MECHANICAL - BRANCH CONTROLLER

TYPE	MARK	MANUFACTURER	MODEL	TYPE	LOCATION	SERVICE	NUMBER OF PORTS	MAXIMUM COOLING CAPACITY	ELECTRICAL VOLT	ELECTRICAL PHASE	ELECTRICAL FREQUENCY	ELECTRICAL MCA	POWER INPUT kW	OPERATING WEIGHT	SIZE WIDTH	SIZE LENGTH	SIZE HEIGHT	NOTES
BC	1-1	MITSUBISHI	CMB-P1016NU-HA1	MAIN BC	LOWER LEVEL	LOWER LEVEL	16	360,000 Btu/h	208 V	1	60 Hz	2 A	0.353 kW	172 lb	1' - 9"	3' - 10"	1' - 0"	1-3
BC	2-1	MITSUBISHI	CMB-P1010NU-HA1	MAIN BC	LEVEL 1	LEVEL 1	10	360,000 Btu/h	208 V	1	60 Hz	2 A	0.183 kW	124 lb	1' - 9"	3' - 10"	1' - 0"	1-3
BC	3-1	MITSUBISHI	CMB-P1010NU-HA1	MAIN BC	MEZZANINE	MEZZANINE	10	360,000 Btu/h	208 V	1	60 Hz	2 A	0.183 kW	124 lb	1' - 9"	3' - 10"	1' - 0"	1-3
BC	4-1	MITSUBISHI	CMB-P1016NU-HA1	MAIN BC	LEVEL 2	LEVELS 2 AND 3	16	360,000 Btu/h	208 V	1	60 Hz	2 A	0.353 kW	172 lb	1' - 9"	3' - 10"	1' - 0"	1-3

1. PROVIDE WITH MANUFACTURER'S CONDENSATE PUMP.
2. INCLUDE DIAMONDBACK BALL VALVES BV-SERIES, 700PSIG WORKING PRESSURE, FULL PORT, 410A RATED.
3. CONNECTED CAPACITY TO BC SHOULD NOT EXCEED 189,000 BTU/H FOR DOUBLE BCS AND 126,000 BTU/H FOR SUB BCS.

MECHANICAL - FAN COIL SCHEDULE

TYPE	MARK	MANUFACTURER	MODEL	LOCATION	SERVICE	TYPE	COOLING CAPACITY	HEATING CAPACITY	FAN AIR FLOW	FAN ESP	REFRIDGERANT TYPE	ELECTRICAL MCA	ELECTRICAL MOCP	ELECTRICAL VOLT	ELECTRICAL PHASE	ELECTRICAL FREQUENCY	ELECTRICAL EMERG. PWR. [Y/N]	OPERATING WEIGHT	WIDTH	LENGTH	HEIGHT	NOTES
FCU	1-1	MITSUBISHI	PLFY-P08NCMU-ER4	LOWER LEVEL	114 CONF	CASSETTE - 4 WAY	8,000 Btu/h	9,000 Btu/h	350 CFM	0.0 in-wg	R-410A	0.3 A	15 A	208 V	1	60 Hz	No	34 lb	1' - 11"	1' - 11"	0' - 9"	1-6
FCU	1-2	MITSUBISHI	PLFY-P08NCMU-ER4	LOWER LEVEL	111 CONF	CASSETTE - 4 WAY	8,000 Btu/h	9,000 Btu/h	350 CFM	0.0 in-wg	R-410A	0.3 A	15 A	208 V	1	60 Hz	No	34 lb	1' - 11"	1' - 11"	0' - 9"	1-6
FCU	1-3	MITSUBISHI	PKFY-P15NHMU-E2	LOWER LEVEL	109 IDF	WALL MOUNTED	15,000 Btu/h	17,000 Btu/h	415 CFM	0.0 in-wg	R-410A	0.4 A	15 A	208 V	1	60 Hz	No	29 lb	0' - 10"	3' - 0"	1' - 0"	1-7
FCU	1-4	MITSUBISHI	PEFY-P18NMHU-E2	LOWER LEVEL	103 LIBRARY	CEILING CONCEALED - HIGH STATIC	18,000 Btu/h	20,000 Btu/h	495 CFM	1.0 in-wg	R-410A	1.6 A	15 A	208 V	1	60 Hz	No	98 lb	2' - 6"	3' - 0"	1' - 3"	1-6
FCU	1-5	MITSUBISHI	PLFY-P08NCMU-ER4	LOWER LEVEL	107 STAGING	CASSETTE - 4 WAY	8,000 Btu/h	9,000 Btu/h	350 CFM	0.0 in-wg	R-410A	0.3 A	15 A	208 V	1	60 Hz	No	34 lb	1' - 11"	1' - 11"	0' - 9"	1-6
FCU	1-6	MITSUBISHI	PEFY-P30NMHU-E2	LOWER LEVEL	113 OPEN OFFICE	CEILING CONCEALED - HIGH STATIC	30,000 Btu/h	34,000 Btu/h	885 CFM	1.0 in-wg	R-410A	2.7 A	15 A	208 V	1	60 Hz	No	124 lb	3' - 5"	3' - 0"	1' - 3"	1-6
FCU	1-7	MITSUBISHI	PEFY-P30NMHU-E2	LOWER LEVEL	113 OPEN OFFICE	CEILING CONCEALED - HIGH STATIC	30,000 Btu/h	34,000 Btu/h	885 CFM	1.0 in-wg	R-410A	2.7 A	15 A	208 V	1	60 Hz	No	124 lb	3' - 5"	3' - 0"	1' - 3"	1-6
FCU	1-8	MITSUBISHI	PLFY-P08NCMU-ER4	LOWER LEVEL	127 CONF	CASSETTE - 4 WAY	8,000 Btu/h	9,000 Btu/h	350 CFM	0.0 in-wg	R-410A	0.3 A	15 A	208 V	1	60 Hz	No	34 lb	1' - 11"	1' - 11"	0' - 9"	1-6
FCU	1-9	MITSUBISHI	PLFY-P08NCMU-ER4	LOWER LEVEL	121 OFFICE	CASSETTE - 4 WAY	8,000 Btu/h	9,000 Btu/h	350 CFM	0.0 in-wg	R-410A	0.3 A	15 A	208 V	1	60 Hz	No	34 lb	1' - 11"	1' - 11"	0' - 9"	1-6
FCU	1-10	MITSUBISHI	PKFY-P06NBMU-E2	LOWER LEVEL	128 VIDEO	WALL MOUNTED	6,000 Btu/h	6,700 Btu/h	210 CFM	0.0 in-wg	R-410A	0.2 A	15 A	230 V	1	60 Hz	No	29 lb	0' - 9"	2' - 8"	1' - 0"	1-7
FCU	1-11	MITSUBISHI	PEFY-P15NMHU-E2	LOWER LEVEL	129 VIDEO	CEILING CONCEALED - HIGH STATIC	15,000 Btu/h	17,000 Btu/h	495 CFM	1.0 in-wg	R-410A	1.6 A	15 A	208 V	1	60 Hz	No	98 lb	2' - 6"	3' - 0"	1' - 3"	1-6
FCU	1-12	MITSUBISHI	PKFY-P24NKMU-E2	LOWER LEVEL	126 ELECTRIAL	WALL MOUNTED	24,000 Btu/h	27,000 Btu/h	920 CFM	0.0 in-wg	R-410A	0.6 A	15 A	208 V	1	60 Hz	No	26 lb	1' - 0"	3' - 11"	1' - 3"	1-7
FCU	2-1	MITSUBISHI	PLFY-P12NCMU-ER4	LEVEL 1	215 CONF TRAINING	CASSETTE - 4 WAY	12,000 Btu/h	13,500 Btu/h	390 CFM	0.0 in-wg	R-410A	0.4 A	15 A	208 V	1	60 Hz	No	37 lb	1' - 11"	1' - 11"	0' - 9"	1-6
FCU	2-2	MITSUBISHI	PLFY-P12NCMU-ER4	LEVEL 1	215 CONF TRAINING	CASSETTE - 4 WAY	12,000 Btu/h	13,500 Btu/h	390 CFM	0.0 in-wg	R-410A	0.4 A	15 A	208 V	1	60 Hz	No	37 lb	1' - 11"	1' - 11"	0' - 9"	1-6
FCU	2-3A	MITSUBISHI	PKFY-P18NBMU-E2	LEVEL 1	213 MPOE	WALL MOUNTED	18,000 Btu/h	20,000 Btu/h	425 CFM	0.0 in-wg	R-410A	0.4 A	15 A	208 V	1	60 Hz	No	29 lb	0' - 10"	3' - 0"	1' - 0"	1-7
FCU	2-3B	MITSUBISHI	PKFY-P18NBMU-E2	LEVEL 1	213 MPOE	WALL MOUNTED	18,000 Btu/h	20,000 Btu/h	425 CFM	0.0 in-wg	R-410A	0.4 A	15 A	208 V	1	60 Hz	No	29 lb	0' - 10"	3' - 0"	1' - 0"	1-7
FCU	2-4	MITSUBISHI	PLFY-P08NCMU-ER4	LEVEL 1	204 OFFICE	CASSETTE - 4 WAY	8,000 Btu/h	9,000 Btu/h	350 CFM	0.0 in-wg	R-410A	0.3 A	15 A	208 V	1	60 Hz	No	34 lb	1' - 11"	1' - 11"	0' - 9"	1-6
FCU	2-5	MITSUBISHI	PLFY-P08NCMU-ER4	LEVEL 1	205 CONF	CASSETTE - 4 WAY	8,000 Btu/h	9,000 Btu/h	350 CFM	0.0 in-wg	R-410A	0.3 A	15 A	208 V	1	60 Hz	No	34 lb	1' - 11"	1' - 11"	0' - 9"	1-6
FCU	2-6	MITSUBISHI	PEFY-P48NMHU-E2	LEVEL 1	216 BREAK ROOM, 217 CONF STADIUM, 218 HOTELING	CEILING CONCEALED - HIGH STATIC	48,000 Btu/h	54,000 Btu/h	1,340 CFM	0.6 in-wg	R-410A	4.2 A	15 A	208 V	1	60 Hz	No	86 lb	4' - 0"	3' - 0"	1' - 3"	1-6
FCU	2-7	MITSUBISHI	PEFY-P27NMAU-E3	LEVEL 1	228 CONF LARGE	CEILING CONCEALED - MED STATIC	27,000 Btu/h	30,000 Btu/h	885 CFM	0.6 in-wg	R-410A	2.7 A	15 A	208 V	1	60 Hz	No	67 lb	3' - 8"	2' - 5"	0' - 10"	1-6
FCU	3-1	MITSUBISHI	PLFY-P15NCMU-ER4	MEZZANINE	313 OPEN OFFICE	CASSETTE - 4 WAY	15,000 Btu/h	17,000 Btu/h	390 CFM	0.0 in-wg	R-410A	0.4 A	15 A	208 V	1	60 Hz	No	37 lb	1' - 11"	1' - 11"	0' - 9"	1-6
FCU	3-2	MITSUBISHI	PLFY-P15NCMU-ER4	MEZZANINE	313 OPEN OFFICE	CASSETTE - 4 WAY	15,000 Btu/h	17,000 Btu/h	390 CFM	0.0 in-wg	R-410A	0.4 A	15 A	208 V	1	60 Hz	No	37 lb	1' - 11"	1' - 11"	0' - 9"	1-6
FCU	3-3	MITSUBISHI	PKFY-P15NHMU-E2	MEZZANINE	312 IDF	WALL MOUNTED	15,000 Btu/h	17,000 Btu/h	415 CFM	0.0 in-wg	R-410A	0.4 A	15 A	208 V	1	60 Hz	No	29 lb	0' - 10"	3' - 0"	1' - 0"	1-7
FCU	3-4	MITSUBISHI	PEFY-P54NMHU-E3	MEZZANINE	214 OPEN OFFICE	CEILING CONCEALED - HIGH STATIC	54,000 Btu/h	60,000 Btu/h	1,485 CFM	0.6 in-wg	R-410A	4.2 A	15 A	208 V	1	60 Hz	No	86 lb	4' - 0"	3' - 0"	1' - 3"	1-6
FCU	3-5	MITSUBISHI	PEFY-P54NMHU-E3	MEZZANINE	214 OPEN OFFICE	CEILING CONCEALED - HIGH STATIC	54,000 Btu/h	60,000 Btu/h	1,485 CFM	0.6 in-wg	R-410A	4.2 A	15 A	208 V	1	60 Hz	No	86 lb	4' - 0"	3' - 0"	1' - 3"	1-6
FCU	3-6	MITSUBISHI	PEFY-P36NMHU-E2	MEZZANINE	317 OPEN OFFICE	CEILING CONCEALED - HIGH STATIC	36,000 Btu/h	40,000 Btu/h	1,340 CFM	1.0 in-wg	R-410A	4.2 A	15 A	208 V	1	60 Hz	No	153 lb	4' - 0"	3' - 0"	1' - 3"	1-6
FCU	3-7	MITSUBISHI	PLFY-P12NCMU-ER4	MEZZANINE	306 CONF	CASSETTE - 4 WAY	12,000 Btu/h	13,500 Btu/h	390 CFM	0.0 in-wg	R-410A	0.4 A	15 A	208 V	1	60 Hz	No	37 lb	1' - 11"	1' - 11"	0' - 9"	1-6
FCU	4-1	MITSUBISHI	PLFY-P08NCMU-ER4	LEVEL 2	421 OFFICE	CASSETTE - 4 WAY	8,000 Btu/h	9,000 Btu/h	350 CFM	0.0 in-wg	R-410A	0.3 A	15 A	208 V	1	60 Hz	No	34 lb	1' - 11"	1' - 11"	0' - 9"	1-6
FCU	4-2	MITSUBISHI	PLFY-P08NCMU-ER4	LEVEL 2	420 CONF	CASSETTE - 4 WAY	8,000 Btu/h	9,000 Btu/h	350 CFM	0.0 in-wg	R-410A	0.3 A	15 A	208 V	1	60 Hz	No	34 lb	1' - 11"	1' - 11"	0' - 9"	1-6
FCU	4-3	MITSUBISHI	PLFY-P08NCMU-ER4	LEVEL 2	419 OFFICE	CASSETTE - 4 WAY	8,000 Btu/h	9,000 Btu/h	350 CFM	0.0 in-wg	R-410A	0.3 A	15 A	208 V	1	60 Hz	No	34 lb	1' - 11"	1' - 11"	0' - 9"	1-6
FCU	4-4	MITSUBISHI	PLFY-P08NCMU-ER4	LEVEL 2	418 OFFICE	CASSETTE - 4 WAY	8,000 Btu/h	9,000 Btu/h	350 CFM	0.0 in-wg	R-410A	0.3 A	15 A	208 V	1	60 Hz	No	34 lb	1' - 11"	1' - 11"	0' - 9"	1-6
FCU	4-5	MITSUBISHI	PKFY-P15NHMU-E2	LEVEL 2	409 IDF	WALL MOUNTED	15,000 Btu/h	17,000 Btu/h	415 CFM	0.0 in-wg	R-410A	0.4 A	15 A	208 V	1	60 Hz	No	29 lb	0' - 10"	3' - 0"	1' - 0"	1-7
FCU	4-6	MITSUBISHI	PEFY-P54NMHU-E3	LEVEL 2	424 OPEN OFFICE	CEILING CONCEALED - HIGH STATIC	54,000 Btu/h	60,000 Btu/h	1,485 CFM	0.6 in-wg	R-410A	4.2 A	15 A	208 V	1	60 Hz	No	86 lb	4' - 0"	3' - 0"	1' - 3"	1-6
FCU	4-7	MITSUBISHI	PEFY-P54NMHU-E3	LEVEL 2	424 OPEN OFFICE	CEILING CONCEALED - HIGH STATIC	54,000 Btu/h	60,000 Btu/h	1,485 CFM	0.6 in-wg	R-410A	4.2 A	15 A	208 V	1	60 Hz	No	86 lb	4' - 0"	3' - 0"	1' - 3"	1-6
FCU	4-8	MITSUBISHI	PEFY-P54NMHU-E3	LEVEL 2	424 OPEN OFFICE N PERIM	CEILING CONCEALED - HIGH STATIC	54,000 Btu/h	60,000 Btu/h	1,485 CFM	0.6 in-wg	R-410A	4.2 A	15 A	208 V	1	60 Hz	No	86 lb	4' - 0"	3' - 0"	1' - 3"	1-6
FCU	4-9	MITSUBISHI	PEFY-P54NMHU-E3	LEVEL 2	424 OPEN OFFICE W PERIM	CEILING CONCEALED - HIGH STATIC	54,000 Btu/h	60,000 Btu/h	1,485 CFM	0.6 in-wg	R-410A	4.2 A	15 A	208 V	1	60 Hz	No	86 lb	4' - 0"	3' - 0"	1' - 3"	1-6
FCU	4-10	MITSUBISHI	PLFY-P08NCMU-ER4	LEVEL 2	415 OFFICE	CASSETTE - 4 WAY	8,000 Btu/h	9,000 Btu/h	350 CFM	0.0 in-wg	R-410A	0.3 A	15 A	208 V	1	60 Hz	No	34 lb	1' - 11"	1' - 11"	0' - 9"	1-6
FCU	4-11	MITSUBISHI	PLFY-P08NCMU-ER4	LEVEL 2	417 CONF	CASSETTE - 4 WAY	8,000 Btu/h	9,000 Btu/h	350 CFM	0.0 in-wg	R-410A	0.3 A	15 A	208 V	1	60 Hz	No	34 lb	1' - 11"	1' - 11"	0' - 9"	1-6
FCU	5-1	MITSUBISHI	PEFY-P54NMHU-E3	LEVEL 3	506 BREAK ROOM	CEILING CONCEALED - HIGH STATIC	54,000 Btu/h	60,000 Btu/h	1,485 CFM	0.6 in-wg	R-410A	4.2 A	15 A	208 V	1	60 Hz	No	86 lb	4' - 0"	3' - 0"	1' - 3"	1-6
FCU	5-2	MITSUBISHI	PEFY-P54NMHU-E3	LEVEL 3	506 BREAK ROOM	CEILING CONCEALED - HIGH STATIC	54,000 Btu/h	60,000 Btu/h	1,485 CFM	0.6 in-wg	R-410A	4.2 A	15 A	208 V	1	60 Hz	No	86 lb	4' - 0"	3' - 0"	1' - 3"	1-6
FCU	5-3	MITSUBISHI	PKFY-P08NBMU-E2	LEVEL 3	503 BMD OFFICE	WALL MOUNTED	8,000 Btu/h	9,000 Btu/h	210 CFM	413.0 in-wg	R-410A	0.4 A	15 A	208 V	1	60 Hz	No	29 lb	0' - 10"	3' - 0"	1' - 0"	1-7

1. HIGH EFFICIENCY, MODULATING VARIABLE REFRIGERANT FLOW UNIT ONLY.
2. PROVIDE WITH PROGRAMMABLE, FULLY INTEGRATED BACNET COMPATIBLE BAS THERMOSTAT.
3. PROVIDE SPRING ISOLATION/ACOUSTICAL LINING.
4. INSTALL WITH PROPER CLEARANCE FOR ELECTRICAL PANELS AND UNIT MAINTENANCE.
5. PROVIDE POLYPROPYLENE HONEYCOMB FILTER.
6. PROVIDE INORGANIC GLASS WOOL REFRIGERANT PIPE INSULATION.
7. PROVIDE CONDENSATE PUMP FOR WALL-MOUNTED UNITS. DUCTED UNITS HAVE BUILT-IN CONDENSATE PUMP.

MECHANICAL - ELECTRIC HEATER SCHEDULE

TYPE	MARK	MANUFACTURER	MODEL	LOCATION	ELECTRICAL KW	ELECTRICAL VOLT	ELECTRICAL PHASE	ELECTRICAL FREQUENCY	EMERGENCY POWER [Y/N]	DIMENSIONS L	DIMENSIONS W	DIMENSIONS H	OPERATING WEIGHT	NOTES
EH	2-1	TRANE	UHWA SERIES 20	LEVEL 1 ENTRANCE NORTH WALL	5 kW	208 V	3	60 Hz	No	1' - 6"	0' - 6 1/2"	1' - 10"	41 lb	1
EH	2-2	TRANE	UHWA SERIES 20	LEVEL 1 ENTRANCE NORTH WALL	5 kW	208 V	3	60 Hz	No	1' - 6"	0' - 6 1/2"	1' - 10"	41 lb	1
EH	2-3	TRANE	UHWA SERIES 20	LEVEL 1 ENTRANCE NORTH WALL	5 kW	208 V	3	60 Hz	No	1' - 6"	0' - 6 1/2"	1' - 10"	41 lb	1
EH	2-4	TRANE	UHWA SERIES 20	LEVEL 1 ENTRANCE NORTH WALL	5 kW	208 V	3	60 Hz	No	1' - 6"	0' - 6 1/2"	1' - 10"	41 lb	1

1. FIT WITHIN EXISTING CASEWORK.

KOMOROUS-TOWEY ARCHITECTS
410 TWELFTH STREET, SUITE 300
OAKLAND, CA 94612
Ph: 510.446.2244 Fx: 510.446.2242
kta@kta-arch.com www.kta-arch.com

INTEGRAL GROUP
427 13th Street
Oakland, CA 94612
510 663-2070
510 663-2080 fax
www.integralgroup.com

REGISTERED PROFESSIONAL ENGINEER
JOHN P. McDONALD
No. M 30438
Exp. 12-31-17
MECHANICAL
STATE OF CALIFORNIA

MECHANICAL SCHEDULES

ITD HEADQUARTERS

393 13TH STREET
OAKLAND, CA 94612

BID SET

REVISIONS

No	Desc	Date
1	65% CD Set	2016-08-01
2	95% CD Set	2016-10-31
3	Bid Set	2016-11-15

© COPYRIGHT 2016

DATE: 03/31/2017

DRAWN BY: JM, EC

PROJECT NO.: 1203.22

M03

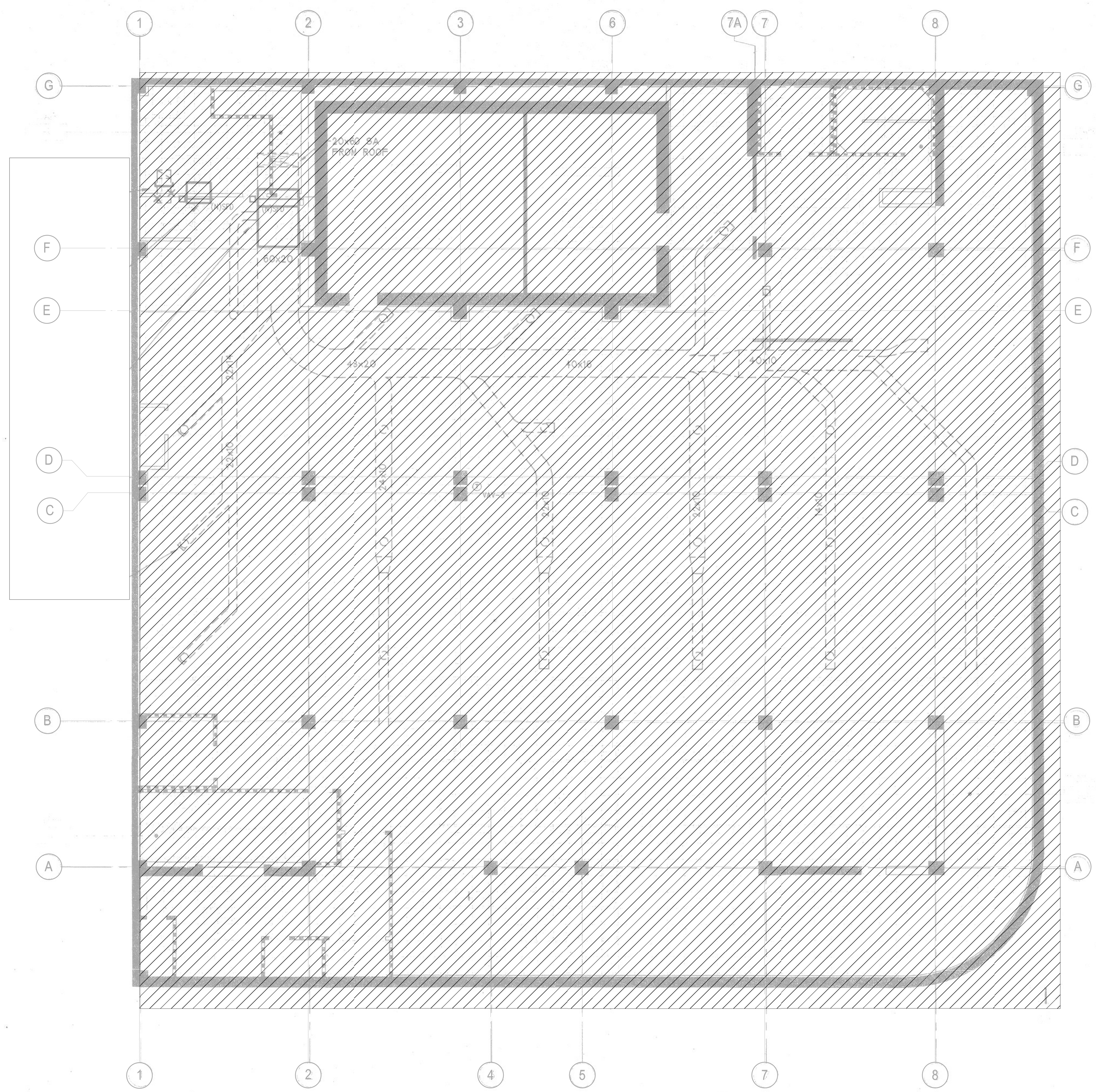

1 MECHANICAL LOWER LEVEL DEMO PLAN
1/8" = 1'-0"

GENERAL NOTES

1 EXISTING CONDITIONS SHOWN REPRESENTS BEST KNOWN INFORMATION COMPILED FROM PREVIOUS RECORD DOCUMENTS. HOWEVER IT HAS NOT BEEN POSSIBLE TO VERIFY ALL CONDITIONS. CONTRACTOR SHALL BE RESPONSIBLE FOR FIELD VERIFYING ALL CONDITIONS CRITICAL TO WORK PRIOR TO BEGINNING ANY DEMO OR NEW WORK.

2 ALL DUCTWORK, MECHANICAL PIPING, EQUIPMENT, SUPPORTS, CONTROLS, AND ASSOCIATED APPURTENANCES THAT OBSTRUCT OR CONFLICT WITH NEW WORK SHALL BE REMOVED AS NECESSARY TO ACCOMMODATE NEW WORK IN HATCHED AREA.

3 PATCH ALL OPENINGS AND PREPARE AREA FOR NEW WORK.

4 SEAL ALL ROOF PENETRATIONS FROM ALL DISPOSED MECHANICAL EQUIPMENT AND DUCTWORK.

5 SALVAGED ITEMS SHALL BE BOXED AND CRATED WITH LIKE ITEMS AND CONTENTS OF EACH LABELED. COORDINATE DELIVERY WITH OWNER.

6 DEMO ALL ABANDONED MECHANICAL PIPING, DUCTWORK, AND EQUIPMENT IN AREAS THAT ARE TO HAVE EXPOSED CEILINGS.

SHEET NOTES

KOMOROUS-TOWEY ARCHITECTS
410 TWELFTH STREET, SUITE 300
OAKLAND, CA 94612
Ph: 510.446.2244 Fx: 510.446.2242
kta@ktarch.com www.ktarch.com

INTEGRAL GROUP
427 13th Street
Oakland, CA 94612
510 663-2070
510 663-2080 fax
www.integralgroup.com

REGISTERED PROFESSIONAL ENGINEER
JOHN P. McDONALD
No. M 30438
Exp. 12-31-17
MECHANICAL
STATE OF CALIFORNIA

MECHANICAL LOWER LEVEL DEMO PLAN

ITD HEADQUARTERS

393 13TH STREET
OAKLAND, CA 94612

BID SET

REVISIONS

No	Desc	Date
1	65% CD Set	2016-08-01
2	95% CD Set	2016-10-31
3	Bid Set	2016-11-15

© COPYRIGHT 2016

DATE: 03/31/2017

DRAWN BY: JM, EC

PROJECT NO.: 1203.22

M21

15XX 13th Street
3/29/2017 11:55:37 AM
C:\Users\apazcoguin\Documents\IG - MEP - 13th Street - 16_apazcoguin.rvt

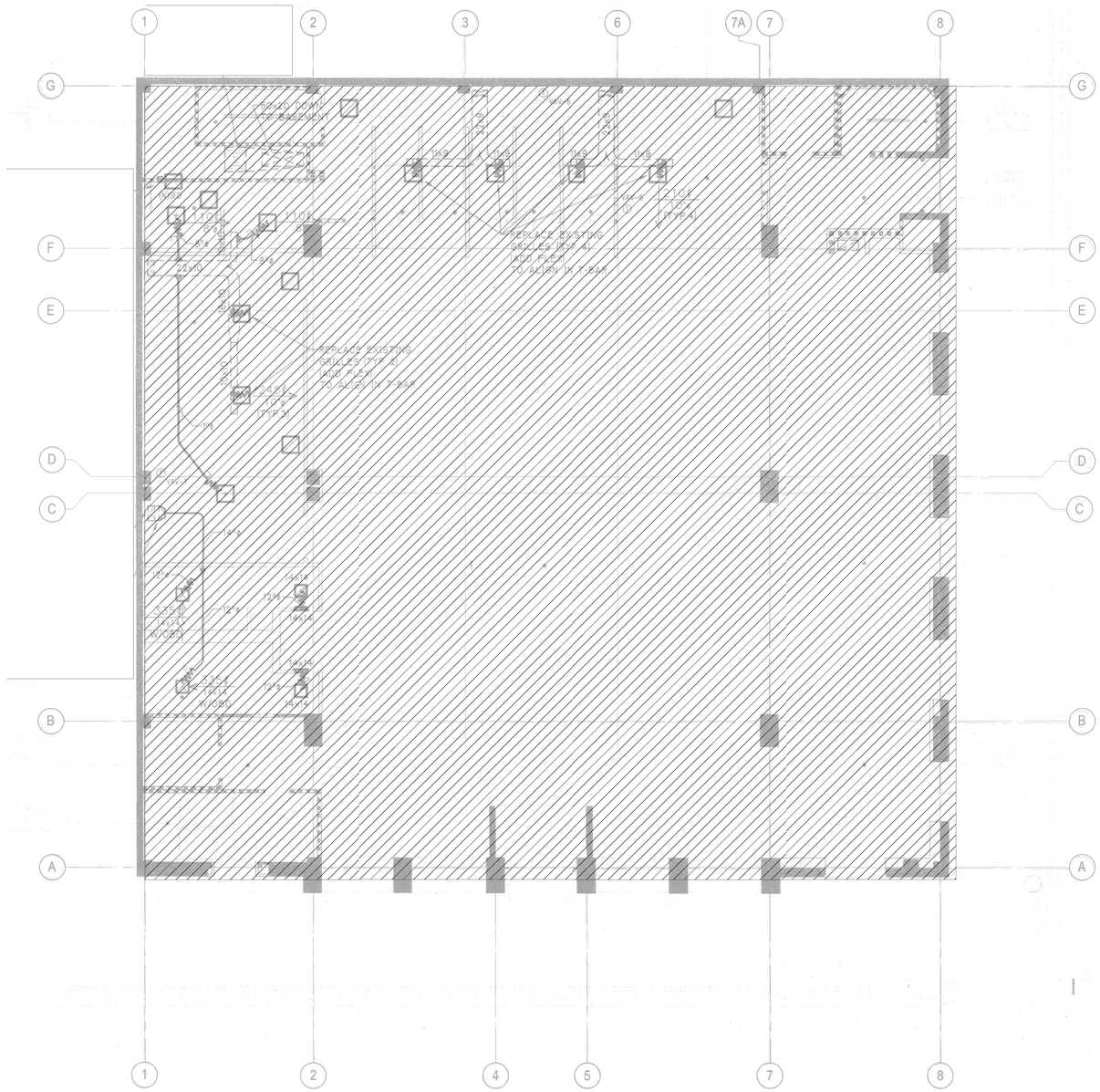

1 MECHANICAL FIRST FLOOR DEMO PLAN
1/8" = 1'-0"

GENERAL NOTES

1 EXISTING CONDITIONS SHOWN REPRESENTS BEST KNOWN INFORMATION COMPILED FROM PREVIOUS RECORD DOCUMENTS. HOWEVER IT HAS NOT BEEN POSSIBLE TO VERIFY ALL CONDITIONS. CONTRACTOR SHALL BE RESPONSIBLE FOR FIELD VERIFYING ALL CONDITIONS CRITICAL TO WORK PRIOR TO BEGINNING ANY DEMO OR NEW WORK.

2 ALL DUCTWORK, MECHANICAL PIPING, EQUIPMENT, SUPPORTS, CONTROLS, AND ASSOCIATED APPURTENANCES THAT OBSTRUCT OR CONFLICT WITH NEW WORK SHALL BE REMOVED AS NECESSARY TO ACCOMMODATE NEW WORK IN HATCHED AREA.

3 PATCH ALL OPENINGS AND PREPARE AREA FOR NEW WORK.

4 SEAL ALL ROOF PENETRATIONS FROM ALL DISPOSED MECHANICAL EQUIPMENT AND DUCTWORK.

5 SALVAGED ITEMS SHALL BE BOXED AND CRATED WITH LIKE ITEMS AND CONTENTS OF EACH LABELED. COORDINATE DELIVERY WITH OWNER.

6 DEMO ALL ABANDONED MECHANICAL PIPING, DUCTWORK, AND EQUIPMENT IN AREAS THAT ARE TO HAVE EXPOSED CEILINGS.

SHEET NOTES

KOMOROUS-TOWEY ARCHITECTS
410 TWELFTH STREET, SUITE 300
OAKLAND, CA 94612
Ph: 510.446.2244 Fx: 510.446.2242
ktc@ktarch.com www.ktarch.com

INTEGRAL GROUP
427 13th Street
Oakland, CA 94612
510 663-2070
510 663-2080 fax
www.integralgroup.com

REGISTERED PROFESSIONAL ENGINEER
JOHN P. McDONALD
No. M 30438
Exp. 12-31-17
MECHANICAL
STATE OF CALIFORNIA

MECHANICAL FIRST FLOOR DEMO PLAN

ITD HEADQUARTERS
393 13TH STREET
OAKLAND, CA 94612

BID SET

REVISIONS

No	Desc	Date
1	65% CD Set	2016-08-01
2	95% CD Set	2016-10-31
3	Bid Set	2016-11-15

© COPYRIGHT 2016

DATE: 03/31/2017

DRAWN BY: JM, EC

PROJECT NO.: 1203.22

M22

1500X 13th Street
3/29/2017 11:55:53 AM
C:\Users\apazcoguin\Documents\IG - MEP - 13th Street - 16_apazcoguin.rvt

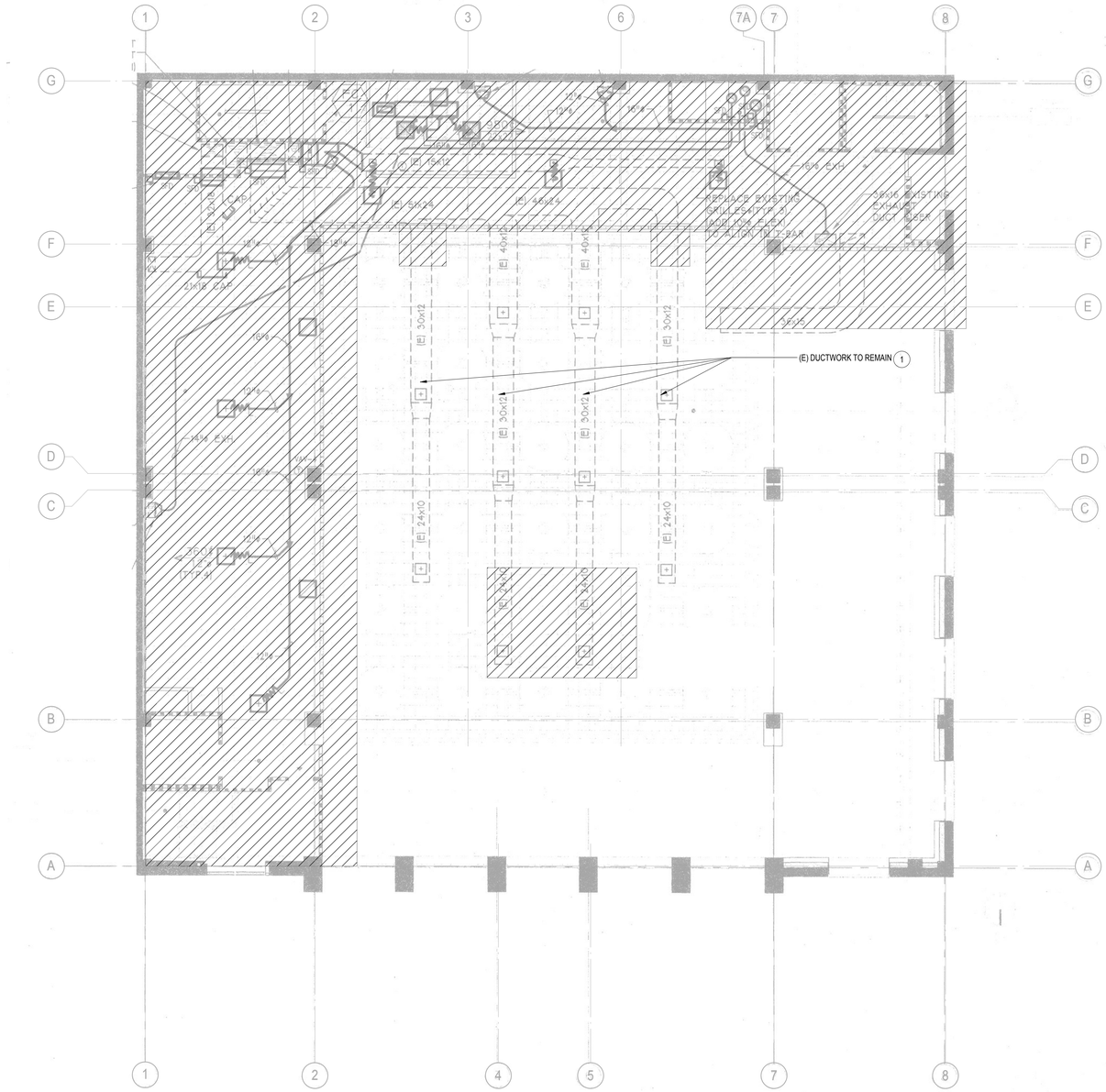

1 MECHANICAL MEZZANINE FLOOR DEMO PLAN
1/8" = 1'-0"

GENERAL NOTES

1 EXISTING CONDITIONS SHOWN REPRESENTS BEST KNOWN INFORMATION COMPILED FROM PREVIOUS RECORD DOCUMENTS. HOWEVER IT HAS NOT BEEN POSSIBLE TO VERIFY ALL CONDITIONS. CONTRACTOR SHALL BE RESPONSIBLE FOR FIELD VERIFYING ALL CONDITIONS CRITICAL TO WORK PRIOR TO BEGINNING ANY DEMO OR NEW WORK.

2 ALL DUCTWORK, MECHANICAL PIPING, EQUIPMENT, SUPPORTS, CONTROLS, AND ASSOCIATED APPURTENANCES THAT OBSTRUCT OR CONFLICT WITH NEW WORK SHALL BE REMOVED AS NECESSARY TO ACCOMMODATE NEW WORK IN HATCHED AREA.

3 PATCH ALL OPENINGS AND PREPARE AREA FOR NEW WORK.

4 SEAL ALL ROOF PENETRATIONS FROM ALL DISPOSED MECHANICAL EQUIPMENT AND DUCTWORK.

5 SALVAGED ITEMS SHALL BE BOXED AND CRATED WITH LIKE ITEMS AND CONTENTS OF EACH LABELED. COORDINATE DELIVERY WITH OWNER.

6 DEMO ALL ABANDONED MECHANICAL PIPING, DUCTWORK, AND EQUIPMENT IN AREAS THAT ARE TO HAVE EXPOSED CEILINGS.

SHEET NOTES

1 IF (E) DUCTWORK TO REMAIN IS INTERNALLY LINED, REMOVE INTERNAL LINING AND THOROUGHLY CLEAN INSIDE OF (E) DUCTWORK.

KOMOROUS-TOWEY ARCHITECTS
410 TWELFTH STREET, SUITE 300
OAKLAND, CA 94612
Ph: 510.446.2244 Fx: 510.446.2242
ktc@ktarch.com www.ktarch.com

INTEGRAL GROUP
427 13th Street
Oakland, CA 94612
510 663-2070
510 663-2080 fax
www.integralgroup.com

REGISTERED PROFESSIONAL ENGINEER
LORN P. McDONALD
No. M 30438
Exp. 12-31-17
MECHANICAL
STATE OF CALIFORNIA

MECHANICAL MEZZANINE FLOOR DEMO PLAN

ITD HEADQUARTERS

393 13TH STREET
OAKLAND, CA 94612

BID SET

REVISIONS

No	Desc	Date
1	65% CD Set	2016-08-01
2	95% CD Set	2016-10-31
3	Bid Set	2016-11-15

© COPYRIGHT 2016

DATE: 03/31/2017

DRAWN BY: JM, EC

PROJECT NO.: 1203.22

M23

1500X 13th Street
3/29/2017 11:56:08 AM
C:\Users\apazcoguin\Documents\IG - MEP - 13th Street - 16_apazcoguin.rvt

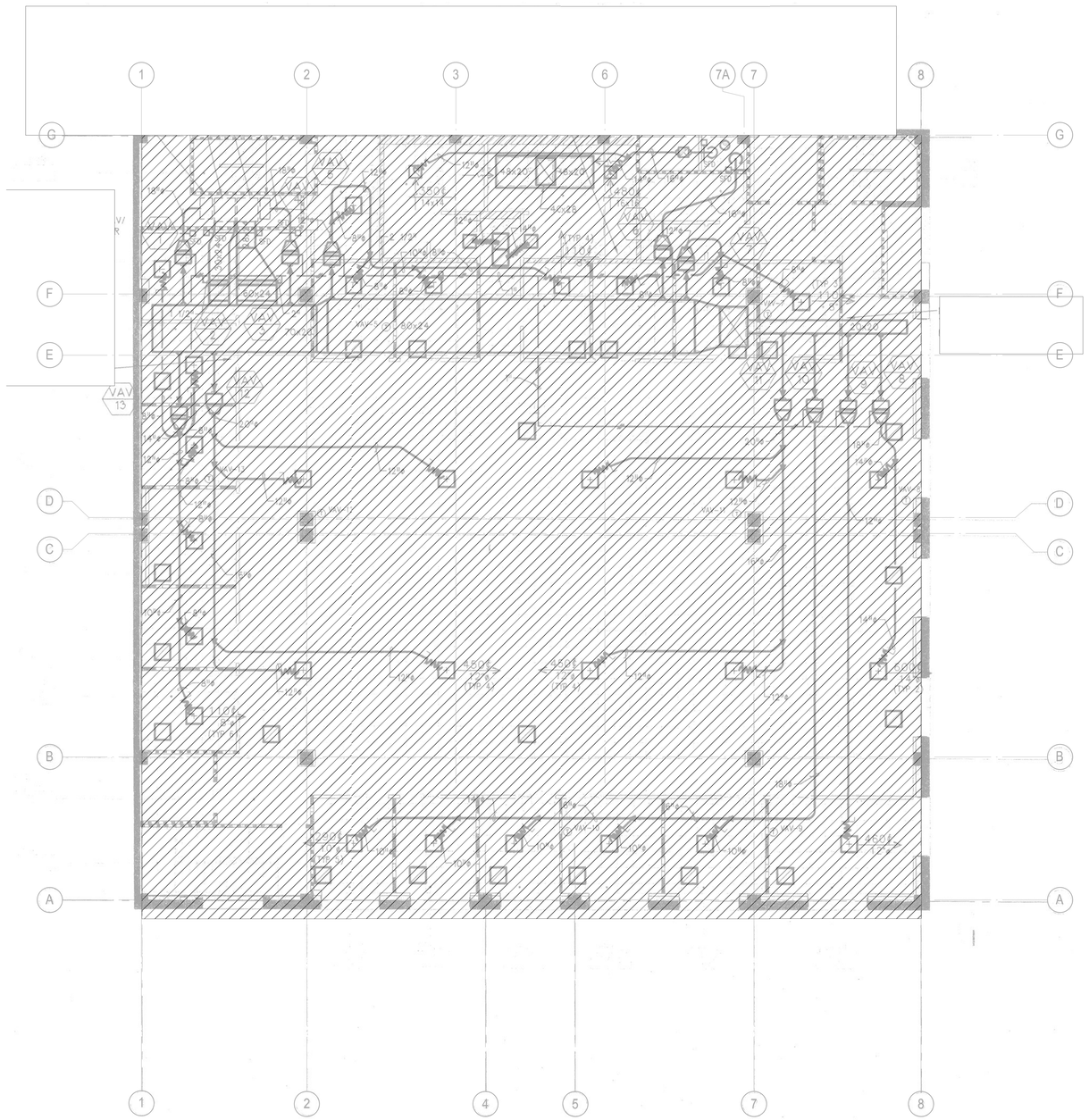

1 MECHANICAL SECOND FLOOR DEMO PLAN
1/8" = 1'-0"

GENERAL NOTES

1. EXISTING CONDITIONS SHOWN REPRESENTS BEST KNOWN INFORMATION COMPILED FROM PREVIOUS RECORD DOCUMENTS. HOWEVER IT HAS NOT BEEN POSSIBLE TO VERIFY ALL CONDITIONS. CONTRACTOR SHALL BE RESPONSIBLE FOR FIELD VERIFYING ALL CONDITIONS CRITICAL TO WORK PRIOR TO BEGINNING ANY DEMO OR NEW WORK.
2. ALL DUCTWORK, MECHANICAL PIPING, EQUIPMENT, SUPPORTS, CONTROLS, AND ASSOCIATED APPURTENANCES THAT OBSTRUCT OR CONFLICT WITH NEW WORK SHALL BE REMOVED AS NECESSARY TO ACCOMMODATE NEW WORK IN HATCHED AREA.
3. PATCH ALL OPENINGS AND PREPARE AREA FOR NEW WORK.
4. SEAL ALL ROOF PENETRATIONS FROM ALL DISPOSED MECHANICAL EQUIPMENT AND DUCTWORK.
5. SALVAGED ITEMS SHALL BE BOXED AND CRATED WITH LIKE ITEMS AND CONTENTS OF EACH LABELED. COORDINATE DELIVERY WITH OWNER.
6. DEMO ALL ABANDONED MECHANICAL PIPING, DUCTWORK, AND EQUIPMENT IN AREAS THAT ARE TO HAVE EXPOSED CEILINGS.

(##) SHEET NOTES

KOMOROUS-TOWEY ARCHITECTS
410 TWELFTH STREET, SUITE 300
OAKLAND, CA 94612
Ph: 510.446.2244 Fx: 510.446.2242
ktc@ktarch.com www.ktarch.com

INTEGRAL GROUP
427 13th Street
Oakland, CA 94612
510 663-2070
510 663-2080 fax
www.integralgroup.com

REGISTERED PROFESSIONAL ENGINEER
LONG P. McDONALD
No. M 30438
Exp. 12-31-17
MECHANICAL
STATE OF CALIFORNIA

MECHANICAL SECOND FLOOR DEMO PLAN

ITD HEADQUARTERS
393 13TH STREET
OAKLAND, CA 94612

BID SET

REVISIONS

No.	Desc	Date
1	65% CD Set	2016-08-01
2	95% CD Set	2016-10-31
3	Bid Set	2016-11-15

© COPYRIGHT 2016

DATE: 03/31/2017

DRAWN BY: JM, EC

PROJECT NO.: 1203.22

M24

1300X 13th Street
3/29/2017 11:56:25 AM
C:\Users\apazzoguin\Documents\IG - MEP - 13th Street - 16_apazzoguin.rvt

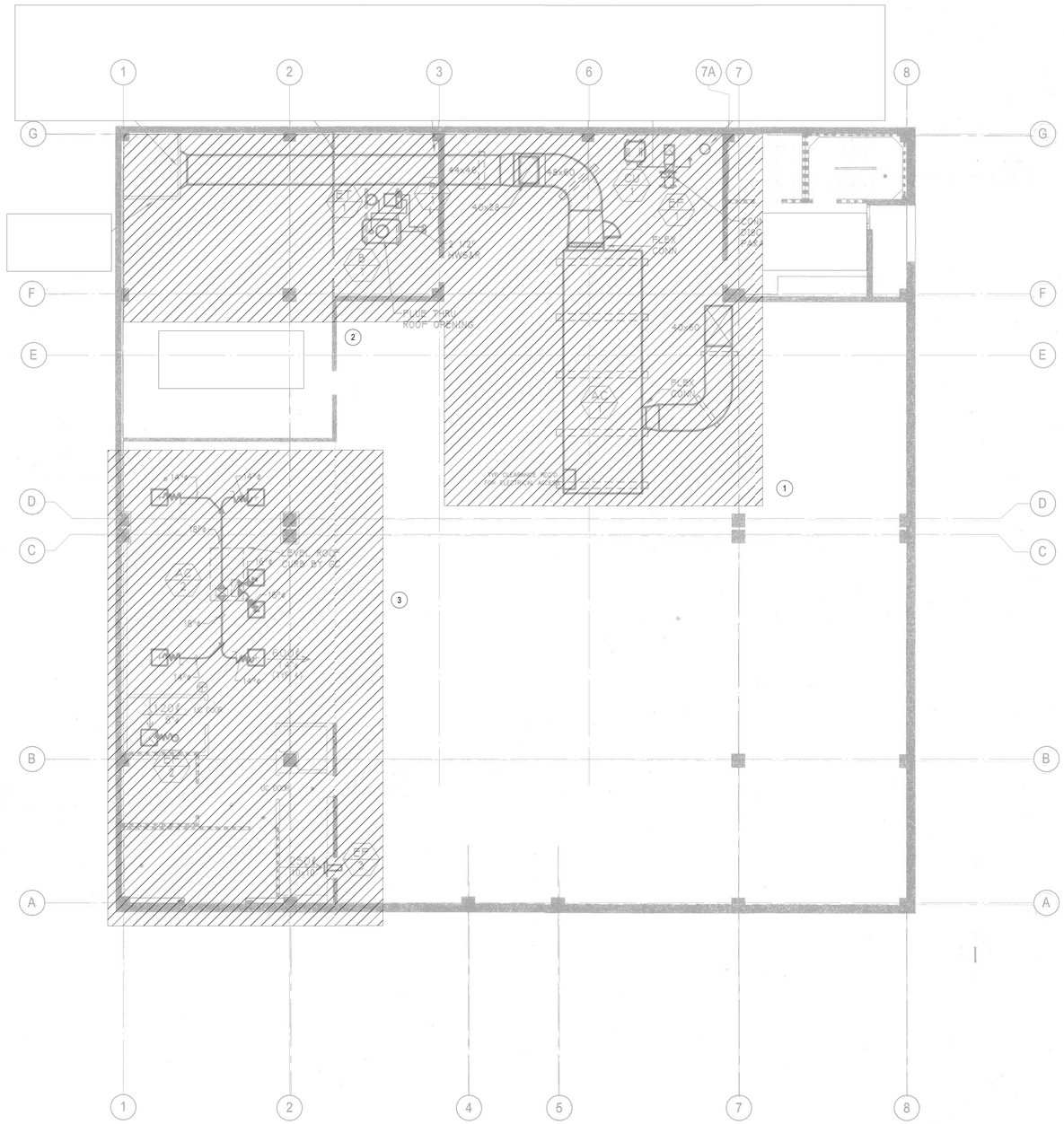

1 MECHANICAL THIRD FLOOR DEMO PLAN
1/8" = 1'-0"

GENERAL NOTES

1 EXISTING CONDITIONS SHOWN REPRESENTS BEST KNOWN INFORMATION COMPILED FROM PREVIOUS RECORD DOCUMENTS. HOWEVER IT HAS NOT BEEN POSSIBLE TO VERIFY ALL CONDITIONS. CONTRACTOR SHALL BE RESPONSIBLE FOR FIELD VERIFYING ALL CONDITIONS CRITICAL TO WORK PRIOR TO BEGINNING ANY DEMO OR NEW WORK.

2 ALL DUCTWORK, MECHANICAL PIPING, EQUIPMENT, SUPPORTS, CONTROLS, AND ASSOCIATED APPURTENANCES THAT OBSTRUCT OR CONFLICT WITH NEW WORK SHALL BE REMOVED AS NECESSARY TO ACCOMMODATE NEW WORK IN HATCHED AREA.

3 PATCH ALL OPENINGS AND PREPARE AREA FOR NEW WORK.

4 SEAL ALL ROOF PENETRATIONS FROM ALL DISPOSED MECHANICAL EQUIPMENT AND DUCTWORK.

5 SALVAGED ITEMS SHALL BE BOXED AND CRATED WITH LIKE ITEMS AND CONTENTS OF EACH LABELED. COORDINATE DELIVERY WITH OWNER.

6 DEMO ALL ABANDONED MECHANICAL PIPING, DUCTWORK, AND EQUIPMENT IN AREAS THAT ARE TO HAVE EXPOSED CEILINGS.

SHEET NOTES

1 MODIFY EXISTING ELEVATED PLATFORM AS NEEDED TO SUPPORT NEW AHU AND HP.

2 REMOVE AND DISPOSE OF (E) BOILER AND ITS ANCILLARY EQUIPMENT. SAFE OFF ELECTRICAL AND CONTROLS.

3 ABANDON IN PLACE ROOFTOP AC UNIT ON ROOF OF (E) LEVEL 3 BREAKROOM. SAFE OFF ELECTRICAL AND CONTROLS.

KOMOROUS-TOWEY ARCHITECTS
410 TWELFTH STREET, SUITE 300
OAKLAND, CA 94612
Ph: 510.446.2244 Fx: 510.446.2242
kta@ktarch.com www.ktarch.com

INTEGRAL GROUP
427 13th Street
Oakland, CA 94612
510 663-2070
510 663-2080 fax
www.integralgroup.com

REGISTERED PROFESSIONAL ENGINEER
JOHN P. McDONALD
No. M 30438
Exp. 12-31-17
MECHANICAL
STATE OF CALIFORNIA

MECHANICAL THIRD FLOOR DEMO PLAN

ITD HEADQUARTERS
393 13TH STREET
OAKLAND, CA 94612

BID SET

REVISIONS

No	Desc	Date
1	65% CD Set	2016-08-01
2	95% CD Set	2016-10-31
3	Bid Set	2016-11-15

© COPYRIGHT 2016

DATE: 03/31/2017

DRAWN BY: JM, EC

PROJECT NO.: 1203.22

M25

13XX 13th Street
3/29/2017 11:56:41 AM
C:\Users\apazcoguin\Documents\IG - MEP - 13th Street - 16_apazcoguin.rvt

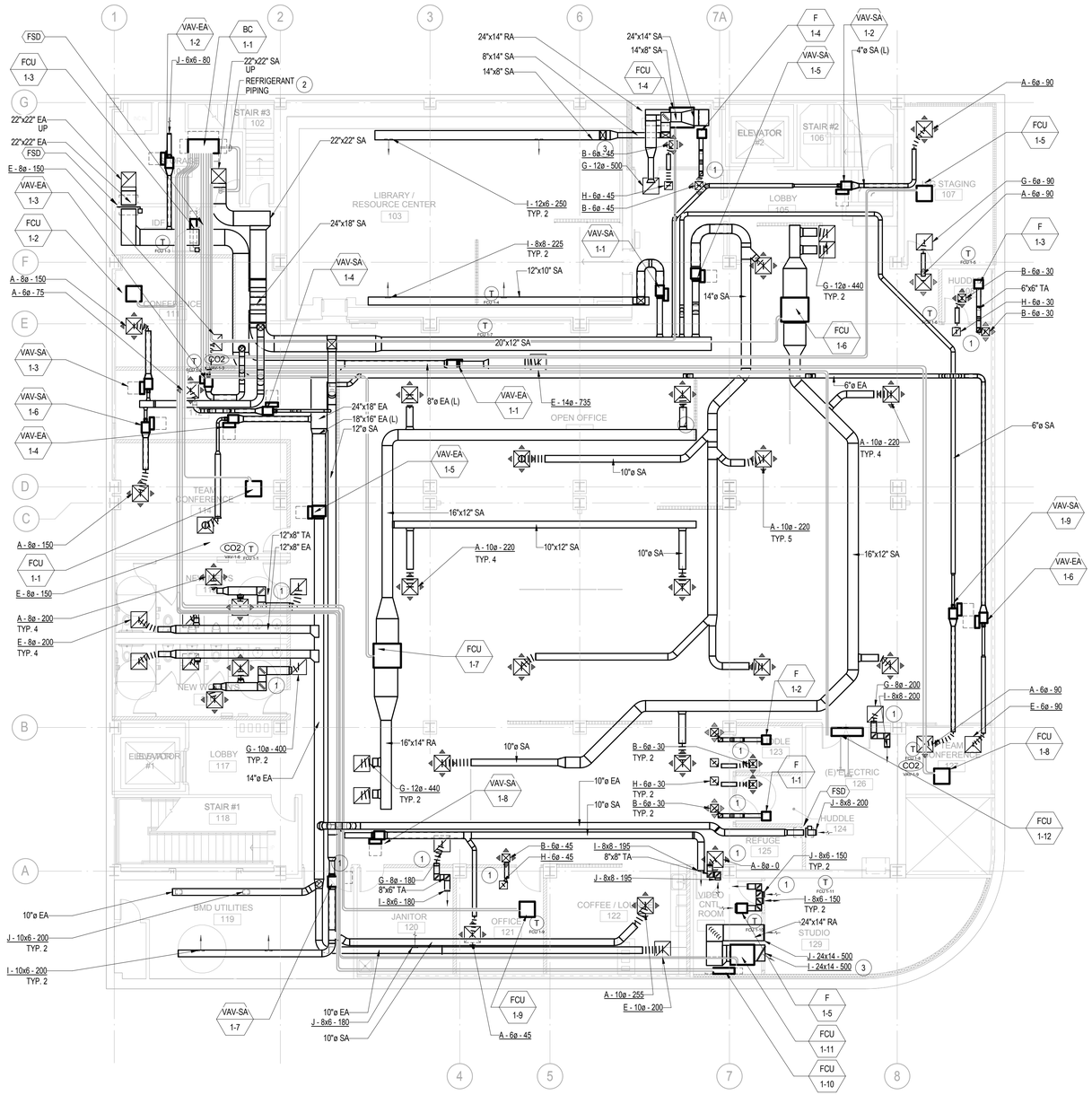

1 MECHANICAL LOWER LEVEL PLAN
1/8" = 1'-0"

GENERAL NOTES

1 DUCT DIMENSIONS ARE FOR INNER FREE AREA

SHEET NOTES

1 MINIMUM 3' OF ACOUSTICALLY LINED DUCT AND TWO ELBOWS BETWEEN INLET AND OUTLET.

2 REFRIGERANT LIQUID AND GAS PIPING ARE DIAGRAMMATIC ONLY. REFER TO M51 FOR PIPE SIZES.

3 SUPPLY GRILLE OF FAN COIL TO HAVAE DEFLECTOR BLADES AND SUPPLY GRILLE TO POINT 45 DEGREES TO NORTH WALL.

4 VAV BOX CONTROLLER TO FACE DOWN FOR ACCESS.

KOMOROUS-TOWEY ARCHITECTS
410 TWELFTH STREET, SUITE 300
OAKLAND, CA 94612
Ph: 510.446.2244 Fx: 510.446.2242
ktc@ktarch.com www.ktarch.com

INTEGRAL GROUP
427 13th Street
Oakland, CA 94612
510 663-2070
510 663-2080 fax
www.integralgroup.com

REGISTERED PROFESSIONAL ENGINEER
JOHN P. McDONALD
No. M 30438
Exp. 12-31-17
MECHANICAL
STATE OF CALIFORNIA

MECHANICAL LOWER LEVEL PLAN

ITD HEADQUARTERS

393 13TH STREET
OAKLAND, CA 94612

BID SET

REVISIONS

No	Desc	Date
1	65% CD Set	2016-08-01
2	95% CD Set	2016-10-31
3	Bid Set	2016-11-15

© COPYRIGHT 2016

DATE: 03/31/2017

DRAWN BY: JM, EC

PROJECT NO.: 1203.22

M31

1500X 13th Street
3/31/2017 4:48:04 PM
C:\Users\apazcoguin\Documents\IG - MEP - 13th Street - 16_apazcoguin.rvt

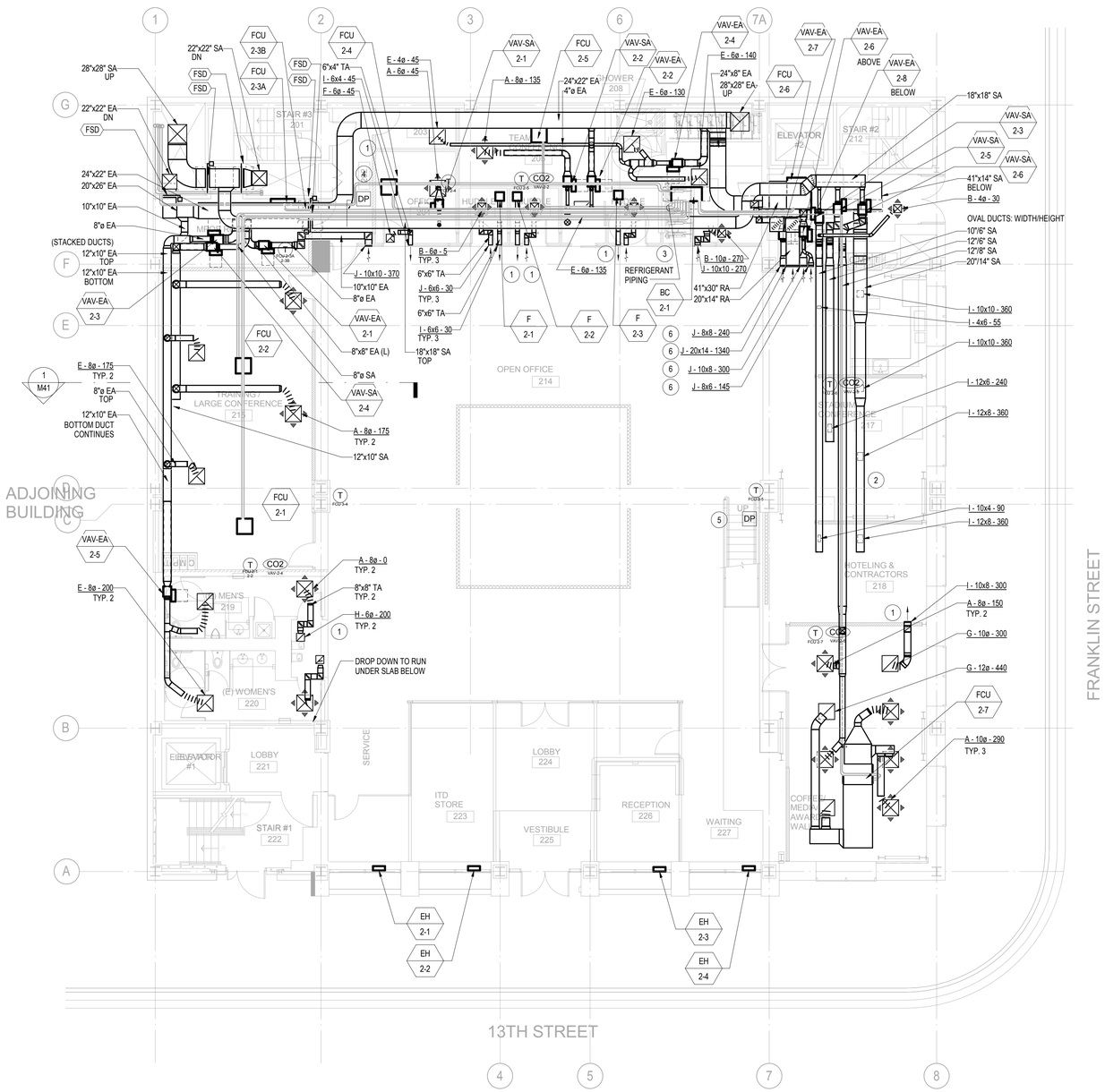

1 MECHANICAL FIRST FLOOR PLAN
1/8" = 1'-0"

GENERAL NOTES

1 DUCT DIMENSIONS ARE FOR INNER FREE AREA

(##) SHEET NOTES

1 MINIMUM 3' OF ACOUSTICALLY LINED DUCT AND TWO ELBOWS BETWEEN INLET AND OUTLET.

2 MOUNT DUCTS AS CLOSE AS POSSIBLE TO UNDERSIDE OF SLAB ABOVE.

3 REFRIGERANT LIQUID AND GAS PIPING ARE DIAGRAMMATIC ONLY. REFER TO M51 FOR PIPE SIZES.

4 DUCT PRESSURE SENSOR IN STRAIGHT RUN OF SUPPLY DUCT.

5 BUILDING PRESSURE SENSOR LOCATED UNDER STAIRS.

6 INDIVIDUAL SIZES AND CFM INDICATED FOR BALANCING PURPOSES. FOUR DUCTS SHALL BE COVERED BY SINGLE 50"X27" J GRILLE. REFER TO ARCHITECTURAL ELEVATIONS.

KOMOROUS-TOWEY ARCHITECTS
410 TWELFTH STREET, SUITE 300
OAKLAND, CA 94612
Ph: 510.446.2244 Fax: 510.446.2242
ktc@ktarch.com www.ktarch.com

INTEGRAL GROUP
427 13th Street
Oakland, CA 94612
510 663-2070 tel
510 663-2080 fax
www.integralgroup.com

REGISTERED PROFESSIONAL ENGINEER
LONG P. McDONALD
No. M 30438
Exp. 12-31-17
MECHANICAL
STATE OF CALIFORNIA

MECHANICAL FIRST FLOOR PLAN

ITD HEADQUARTERS

393 13TH STREET
OAKLAND, CA 94612

BID SET

REVISIONS

No	Desc	Date
1	65% CD Set	2016-08-01
2	95% CD Set	2016-10-31
3	Bid Set	2016-11-15

© COPYRIGHT 2016

DATE: 03/31/2017

DRAWN BY: JM, EC

PROJECT NO.: 1203.22

M32

1500 13th Street
3/28/2017 4:08:21 PM
C:\Users\spazcoguin\Documents\IG - MEP - 13th Street - 16_spazcoguin.rvt

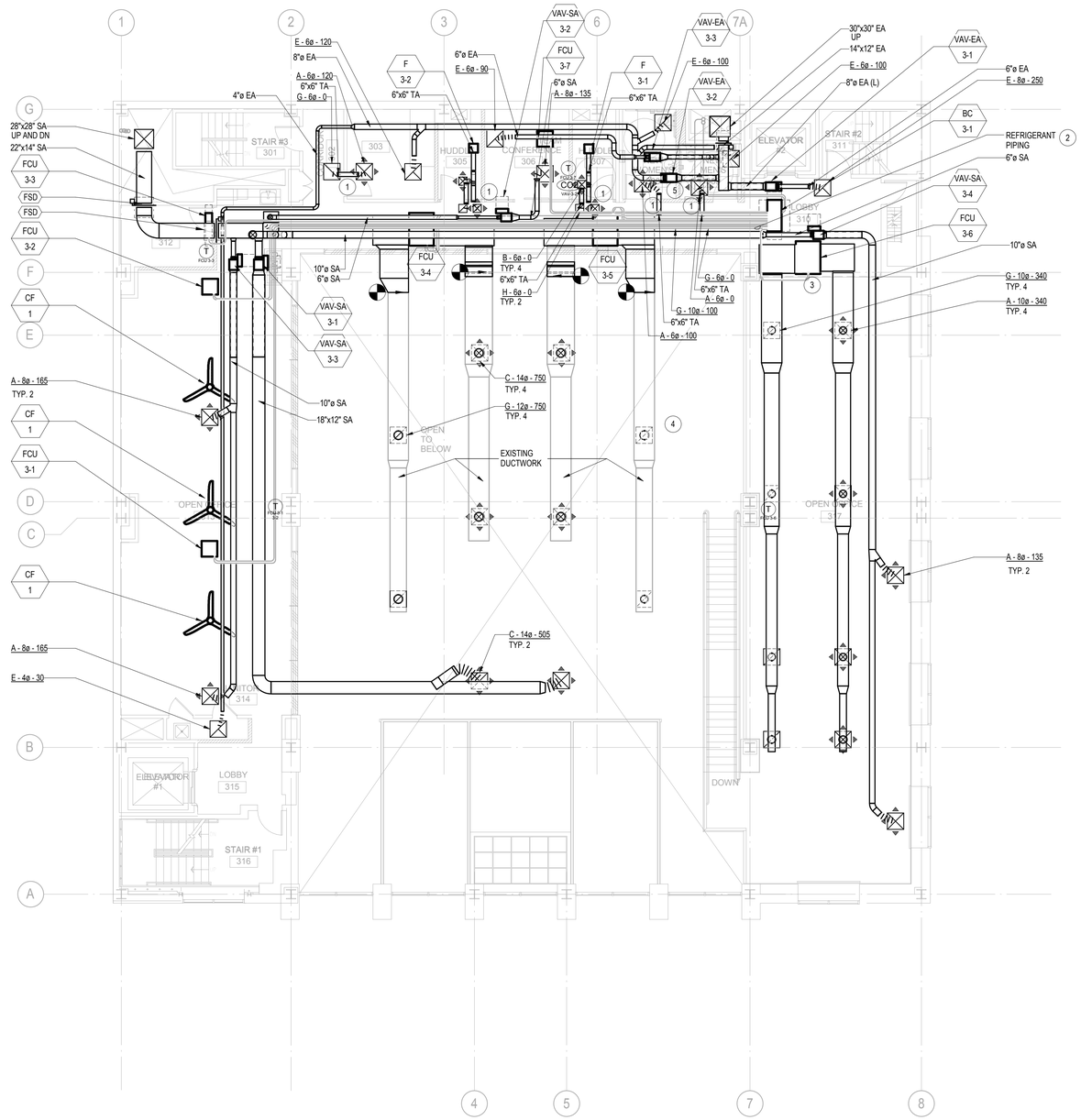

1 MECHANICAL MEZZANINE FLOOR PLAN
1/8" = 1'-0"

GENERAL NOTES

1 DUCT DIMENSIONS ARE FOR INNER FREE AREA

SHEET NOTES

1 MINIMUM 3' OF ACOUSTICALLY LINED DUCT AND TWO ELBOWS BETWEEN INLET AND OUTLET.

2 REFRIGERANT LIQUID AND GAS PIPING ARE DIAGRAMMATIC ONLY. REFER TO M51 FOR PIPE SIZES.

3 COORDINATE LOCATION AND SIZE OF NEW OPENINGS FOR MECHANICAL SUPPLY/RETURN WITH GENERAL CONTRACTOR.

4 INSULATE EXTERIOR OF (E) DUCT.

5 VAV BOX CONTROLLER TO FACE DOWN FOR ACCESS.

KOMOROUS-TOWEY ARCHITECTS
410 TWELFTH STREET, SUITE 300
OAKLAND, CA 94612
Ph: 510.446.2244 Fx: 510.446.2242
kta@kta-arch.com www.kta-arch.com

INTEGRAL GROUP
427 13th Street
Oakland, CA 94612
510 663-2070
510 663-2080 fax
www.integralgroup.com

REGISTERED PROFESSIONAL ENGINEER
JOHN P. McDONALD
No. M 30438
Exp. 12-31-17
MECHANICAL
STATE OF CALIFORNIA

MECHANICAL MEZZANINE FLOOR PLAN

ITD HEADQUARTERS

393 13TH STREET
OAKLAND, CA 94612

BID SET

REVISIONS

No	Desc	Date
1	65% CD Set	2016-08-01
2	95% CD Set	2016-10-31
3	Bid Set	2016-11-15

© COPYRIGHT 2016

DATE: 03/31/2017

DRAWN BY: JM, EC

PROJECT NO.: 1203.22

M33

1500X 13th Street
3/28/2017 4:08:25 PM
C:\Users\spazcoguin\Documents\IG - MEP - 13th Street - 16_spazcoguin.rvt

GENERAL NOTES

1 DUCT DIMENSIONS ARE FOR INNER FREE AREA

SHEET NOTES

1 MINIMUM 3' OF ACOUSTICALLY LINED DUCT AND TWO ELBOWS BETWEEN INLET AND OUTLET.

2 REFRIGERANT LIQUID AND GAS PIPING ARE DIAGRAMMATIC ONLY. REFER TO M51 FOR PIPE SIZES.

3 VAV BOX CONTROLLER TO FACE DOWN FOR ACCESS.

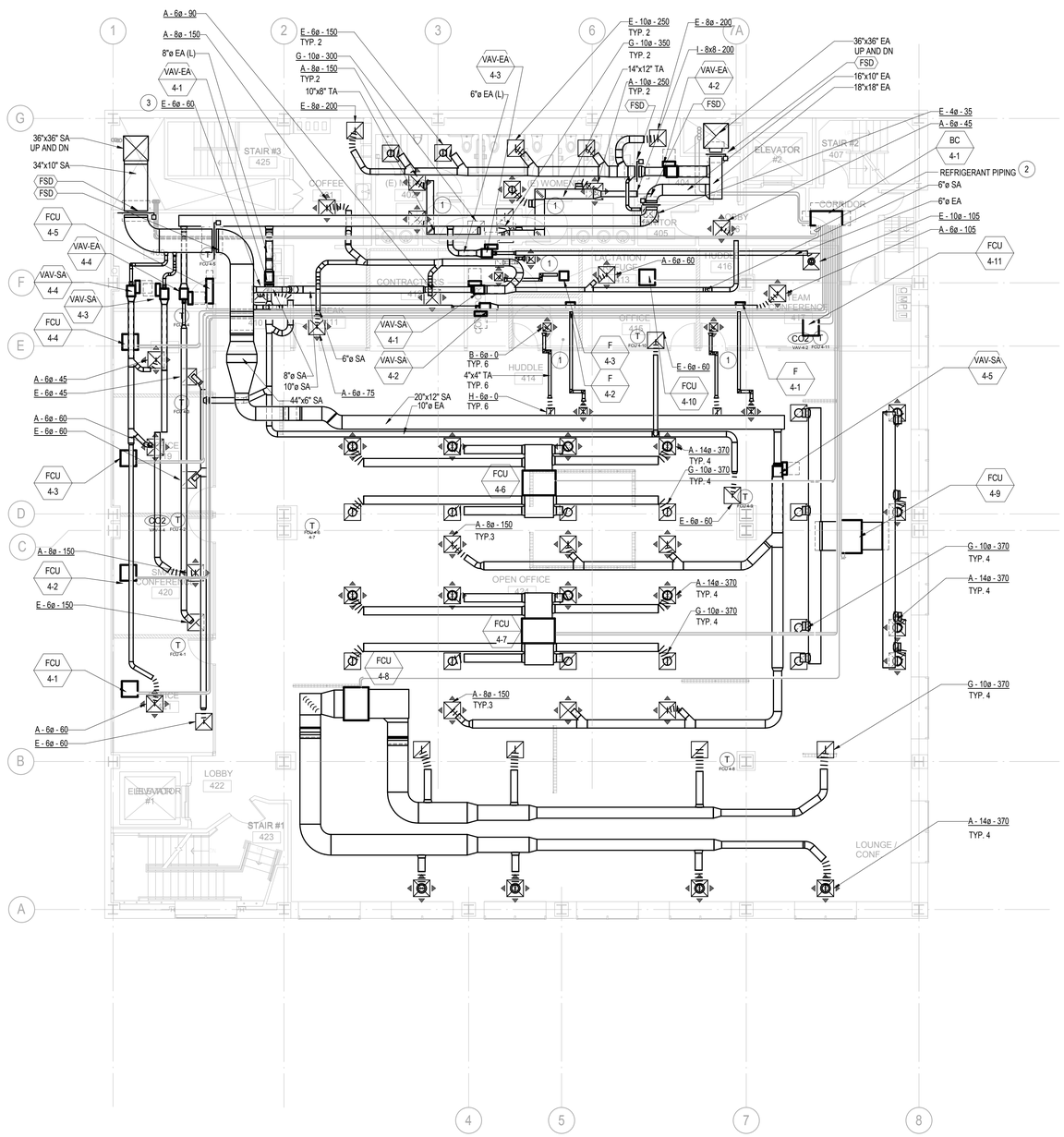

1 MECHANICAL SECOND FLOOR PLAN
1/8" = 1'-0"

KOMOROUS-TOWEY ARCHITECTS
410 TWELFTH STREET, SUITE 300
OAKLAND, CA 94612
Ph: 510.446.2244 Fx: 510.446.2242
ktc@ktarch.com www.ktarch.com

INTEGRAL GROUP
427 13th Street
Oakland, CA 94612
510 663-2070
510 663-2080 fax
www.integralgroup.com

REGISTERED PROFESSIONAL ENGINEER
JOHN P. McDONALD
No. M 30438
Exp. 12-31-17
MECHANICAL
STATE OF CALIFORNIA

MECHANICAL SECOND FLOOR PLAN

ITD HEADQUARTERS

393 13TH STREET
OAKLAND, CA 94612

BID SET

REVISIONS

No	Desc	Date
1	65% CD Set	2016-08-01
2	95% CD Set	2016-10-31
3	Bid Set	2016-11-15

© COPYRIGHT 2016

DATE: 03/31/2017

DRAWN BY: JM, EC

PROJECT NO.: 1203.22

M34

1500X 13th Street
3/28/2017 4:08:31 PM
C:\Users\apazcoguin\Documents\IG - MEP - 13th Street - 16_apazcoguin.rvt

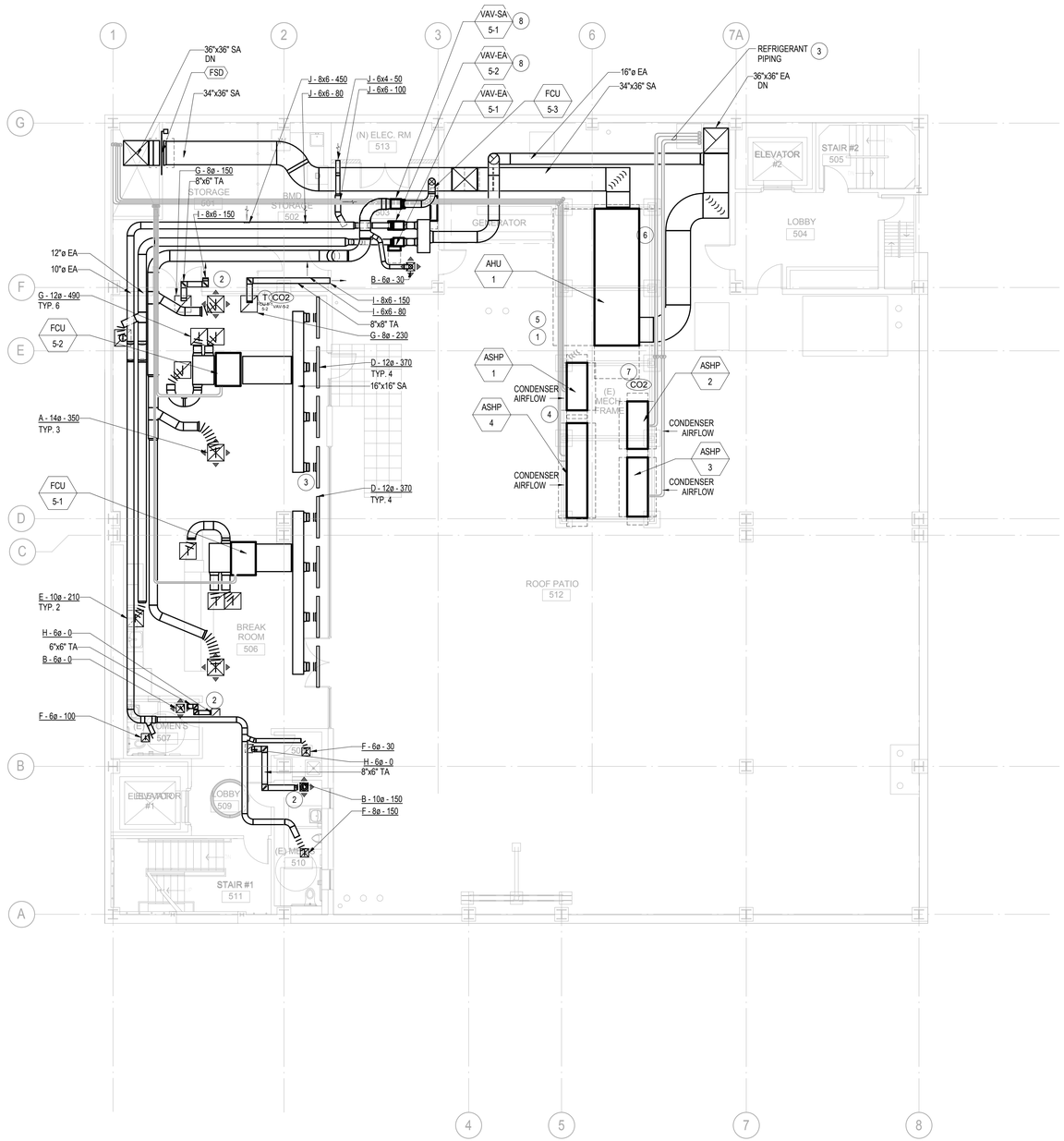

1 MECHANICAL THIRD FLOOR PLAN
1/8" = 1'-0"

GENERAL NOTES

1 DUCT DIMENSIONS ARE FOR INNER FREE AREA

SHEET NOTES

1 COORDINATE WITH STRUCTURAL TO MOUNT ONTO (E) ELEVATED PLATFORM AND ADD ADDITIONAL STEEL RAIL SUPPORTS AS NEEDED.

2 MINIMUM 3' OF ACOUSTICALLY LINED DUCT AND TWO ELBOWS BETWEEN INLET AND OUTLET.

3 REFRIGERANT LIQUID AND GAS PIPING ARE DIAGRAMMATIC ONLY. REFER TO M51 FOR PIPE SIZES.

4 ORIENT AIR SOURCE HEAT PUMPS SO OUTDOOR AIR INTAKES ARE FROM OUTSIDE THE PLATFORM AS INDICATED BY THE AIRFLOW ARROWS.

5 PROVIDE STAIRS AND RAILINGS TO ACCESS AND MAINTAIN EQUIPMENT PER OSHA 1910.23 AND 1910.24.

6 CONDENSER FANS OF AHU. LEAVE 6" CLEARANCE ACCESS. ROUTE REFRIGERANT PIPING BELOW ELEVATED PLATFORM TO MAINTAIN AHU ACCESS.

7 OUTDOOR AMBIENT CO2 SENSOR

8 VAV BOX CONTROLLER TO FACE DOWN FOR ACCESS.

KOMOROUS-TOWEY ARCHITECTS
410 TWELFTH STREET, SUITE 300
OAKLAND, CA 94612
Ph: 510.446.2244 Fx: 510.446.2242
ktc@ktarch.com www.ktarch.com

INTEGRAL GROUP
427 13th Street
Oakland, CA 94612
510 663-2070
510 663-2080 fax
www.integralgroup.com

REGISTERED PROFESSIONAL ENGINEER
JOHN P. McDONALD
No. M 30438
Exp. 12-31-17
MECHANICAL
STATE OF CALIFORNIA

MECHANICAL THIRD FLOOR PLAN

ITD HEADQUARTERS
393 13TH STREET
OAKLAND, CA 94612

BID SET

REVISIONS

No	Desc	Date
1	65% CD Set	2016-08-01
2	95% CD Set	2016-10-31
3	Bid Set	2016-11-15

© COPYRIGHT 2016

DATE: 03/31/2017

DRAWN BY: JM, EC

PROJECT NO.: 1203.22

M35

1500X 13th Street
3/28/2017 4:08:35 PM
C:\Users\spazzcoguin\Documents\IG - MEP - 13th Street - 16_spazzcoguin.rvt

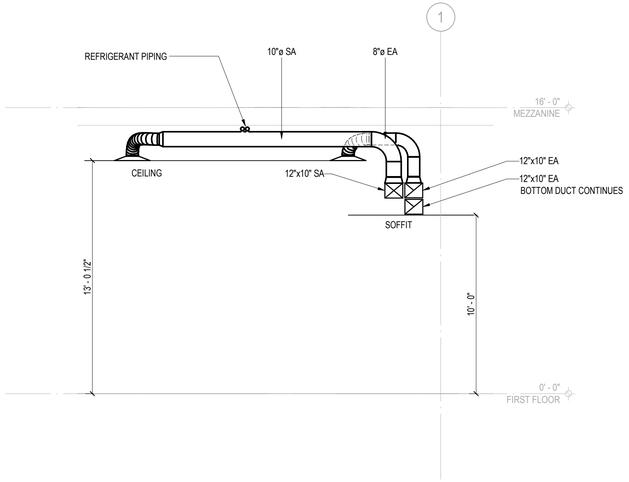

1 Section 211 Training
1/4" = 1'-0"

KOMOROUS-TOWEY
ARCHITECTS
410 TWELFTH STREET, SUITE 300
OAKLAND, CA 94612
Ph: 510.446.2244 Fx: 510.446.2242
ktg@ktarch.com www.ktarch.com

INTEGRAL GROUP
427 13th Street
Oakland CA 94612
510 663-2070
510 663-2080 fax
www.integralgroup.com

REGISTERED PROFESSIONAL ENGINEER
JOHN P. McDONALD
No. M 30438
Exp. 12-31-17
MECHANICAL
STATE OF CALIFORNIA

MECHANICAL SECTIONS

ITD HEADQUARTERS

393 13TH STREET
OAKLAND, CA 94612

BID SET

REVISIONS

No	Desc	Date
1	65% CD Set	2016-08-01
2	95% CD Set	2016-10-31
3	Bid Set	2016-11-15

© COPYRIGHT 2016

DATE: 03/31/2017

DRAWN BY: JM, EC

PROJECT NO.: 1203.22

M41

1300X 13th Street
3/28/2017 4:08:38 PM
C:\Users\spazzoguin\Documents\IG - MEP - 13th Street - 16_spazzoguin.rvt

ITD			
DIAGRAM SYMBOL LEGEND		CONT.No	PAGE
DISPLAY	DESCRIPTION		
///	POWER WIRE		
———	CONTROL WIRE		
— —	REF. PIPE		

CITY MULTI

SYSTEM SCHEMATIC DWG.

Additional refrigerant charge is needed depending on the size and length of extended piping. Please refer the amount of pre-charge and the formula of calculation which is mentioned on the data book.
1.25mm(16 AWG) : 1.25mm(16 AWG) or more. 0.75mm(20 AWG) : between 0.5mm(24 AWG) and 0.75mm(20 AWG).

PIPING LIST		
SYMBOL BRANCH PIPE MODEL NAME		
J1	Reducer	
SYMBOL LIQUID PIPE/GAS PIPE SIZE		
P1	1/4	/ 1/2
P2	3/8	/ 5/8
P3	7/8	/ 1-1/8
P4	3/4	/ 1-1/8
P5	1-1/8	/
P6		/ 1-5/8
P7	7/8	/
P8		/ 1-1/8

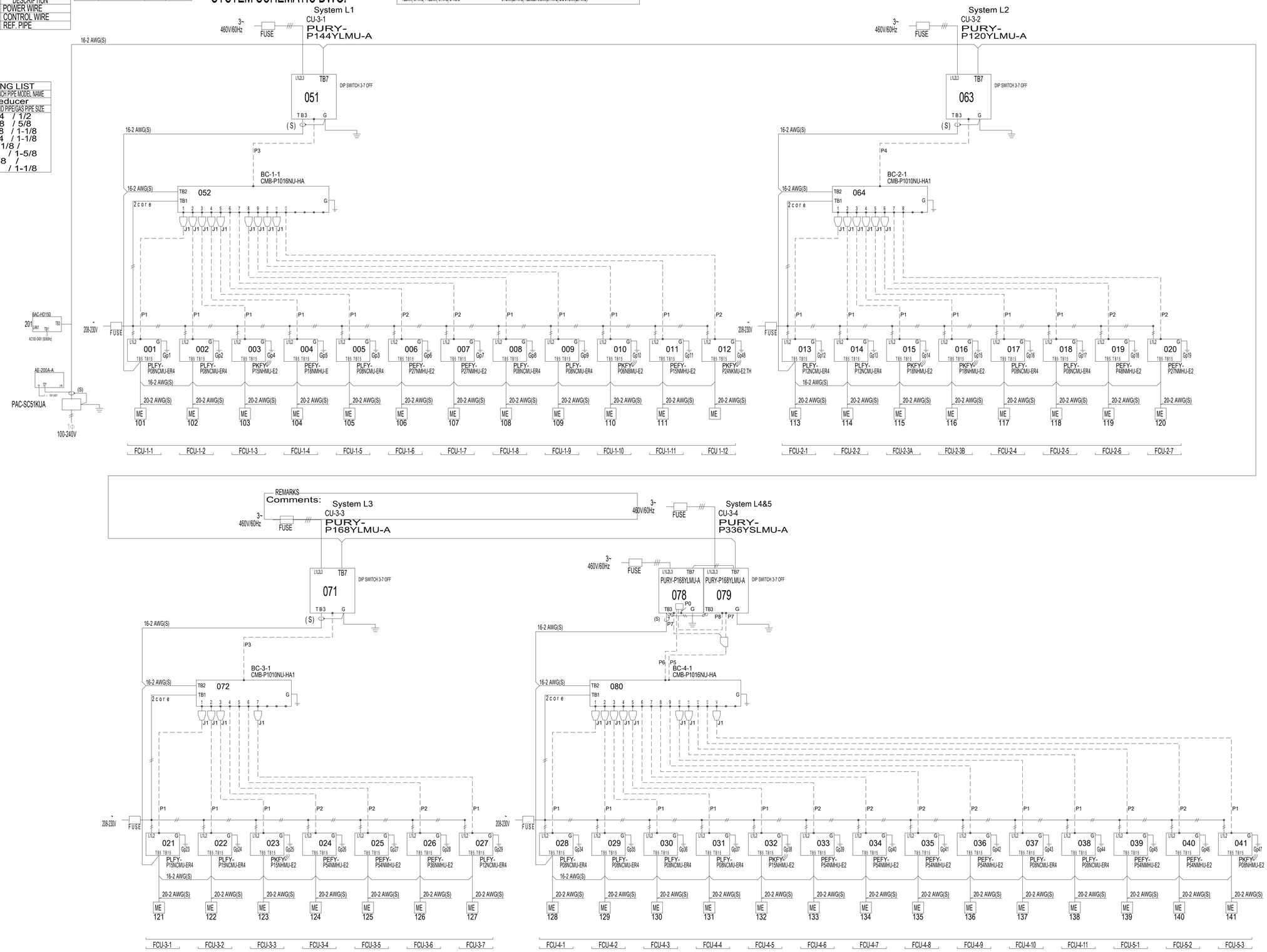

1 VRF DIAGRAM
N.T.S.

KOMOROUS-TOWEY ARCHITECTS
410 TWELFTH STREET, SUITE 300
OAKLAND, CA 94612
Ph: 510.446.2244 Fx: 510.446.2242
ktc@ktarch.com www.ktarch.com

INTEGRAL GROUP
427 13th Street
Oakland, CA 94612
510 663-2070
510 663-2080 fax
www.integralgroup.com

REGISTERED PROFESSIONAL ENGINEER
LONG P. MCDONALD
No. M 30438
Exp. 12-31-17
MECHANICAL
STATE OF CALIFORNIA

MECHANICAL DIAGRAMS AND SCHEMATICS

ITD HEADQUARTERS

393 13TH STREET
OAKLAND, CA 94612

BID SET

REVISIONS

No	Desc	Date
1	65% CD Set	2016-08-01
2	95% CD Set	2016-10-31
3	Bid Set	2016-11-15

© COPYRIGHT 2016

DATE: 03/31/2017
DRAWN BY: JM, EC
PROJECT NO.: 1203.22

M51

1500X 13th Street
3/28/2017 4:08:41 PM
C:\Users\apaccoguin\Documents\IG - MEP - 13th Street - 16_apaccoguin.rvt

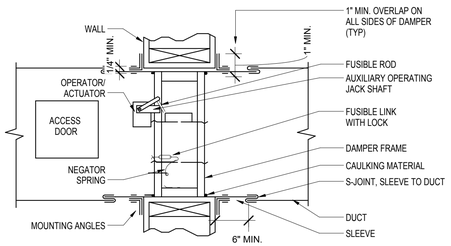

VERTICAL INSTALLATION

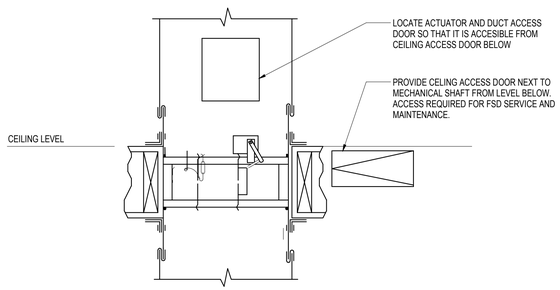

HORIZONTAL INSTALLATION

NOTES:

1. MOUNTING ANGLES SHALL BE 1 1/2" x 1 1/2" x 16 GAGE MIN. FASTENED WITH NO. 10 SCREWS 8" ON CENTER.
2. USE ONLY STATE OF CALIFORNIA FIRE MARSHALL LISTED FIRE DAMPERS & INSTALL IN ACCORDANCE WITH STATE FIRE MARSHALL LISTING NO. 3225-245:005 & U.L. STANDARD 555.
3. GENERAL CONTRACTOR SHALL COORDINATE CEILING ACCESS DOORS AS REQUIRED TO ACCESS DAMPER ACESS DOORS IN DUCT.
4. ACCESS DOOR SHALL BE PROVIDED IN DUCT AND SHALL BE OF ADEQUATE SIZE AND LOCATION TO PERMIT MAINTENANCE & RESETTING OF DAMPER.
5. DAMPER IS TO BE POWERED OPEN AND FAIL CLOSED.
6. DUCT SMOKE DETECTOR AT FSD SHALL SHUT DOWN THE FSD ON DETECTION OF SMOKE DUCT DETECTOR PROVIDED AND WIRED BY ELECTRICAL CONTRACTOR.
7. THE DUCT SMOKE DETECTORS FOR THE SMOKE DAMPERS LOCATED AT RATED WALL PENETRATIONS SHALL BE LOCATED WITHIN FOUR (4) FEET ON THE UPSTREAM SIDE OF THE RATED ASSEMBLY, BRANCHES AND REGISTERS OR ANY OTHER OPENING ARE NOT PERMITTED TO BE LOCATED IN THE DUCT BETWEEN THEM SMOKE DETECTOR AND THE RATED WALL.

7 FIRE/SMOKE DAMPER DETAIL
N.T.S.

NOTES:

1. PENETRATINO FIRESTOP FOR MAX. 12"Ø DUCT THROUGH A GYPSUM WALLBOARD ASSEMBLY

6 1 HR-RATED ROUND DUCT PENETRATION DETAIL
N.T.S.

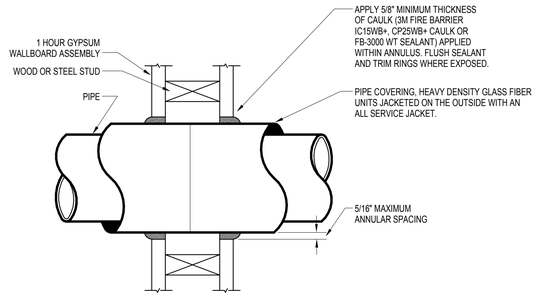

NOTES:

1. PENETRATION FIRESTOP FOR MAX. 12"Ø PIPE THOUGH A GYPSUM WALLBOARD ASSEMBLY.

5 1-HR OR 2-HR RATED WALL PIPE PENETRATION
N.T.S.

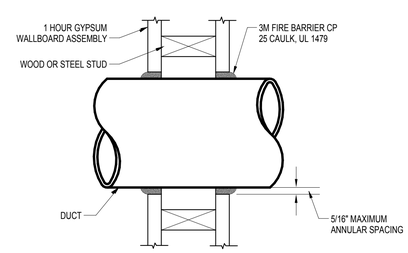

NOTES:

1. PENETRATION FIRE-STOP FOR MAX. 12" Ø DUCT THROUGH A GYPSUM WALLBOARD ASSEMBLY.
2. GALVANIZED STEEL DUCT PENETRATIONS TO BE INSTALLED CONCENTRICALLY OR ECCENTRICALLY WITHIN THE FIRESTOP SYSTEM. THE ANNULAR SPACE BETWEEN THE DUCT AND PERIPHERY OF OPENING SHALL BE 0", AND MAX 1-1/2". DUCT TO BE RIGIDLY SUPPORTED ON BOTH SIDES OF WALL ASSEMBLY.

4 DUCT PENETRATION THROUGH 1-HOUR RATED WALL
N.T.S.

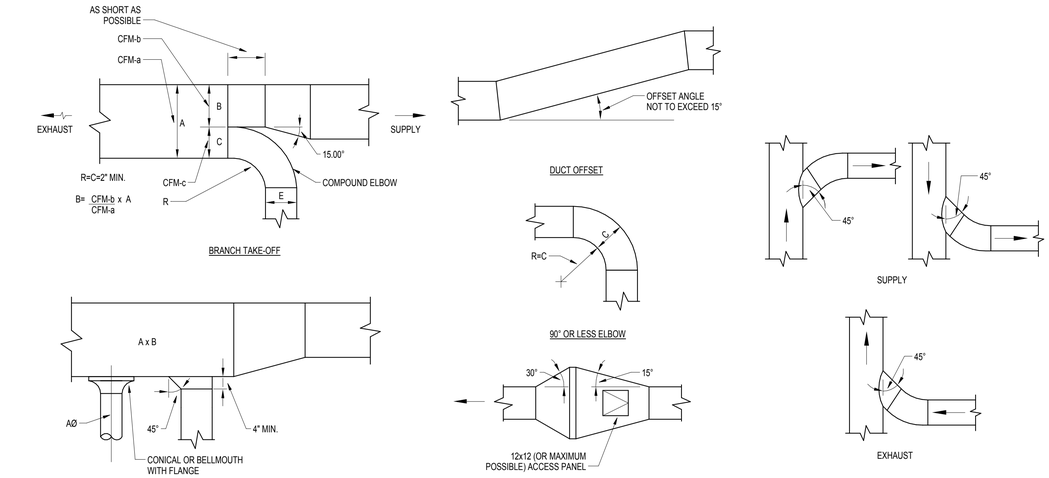

3 LOW PRESSURE DROP DUCT FITTINGS DETAIL
N.T.S.

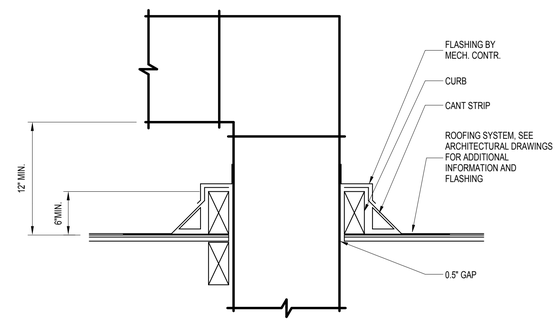

2 DUCT THROUGH ROOF
N.T.S.

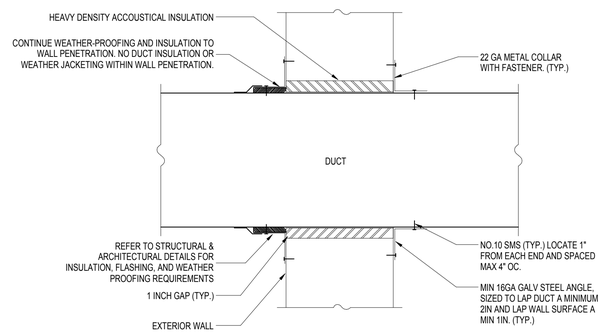

1 DUCT PENETRATION THROUGH EXTERIOR WALL DETAIL
N.T.S.

KOMOROUS-TOWEY ARCHITECTS
410 TWELFTH STREET, SUITE 300
OAKLAND, CA 94612
Ph: 510.446.2244 Fx: 510.446.2242
ktc@ktarch.com www.ktarch.com

INTEGRAL GROUP
427 13th Street
Oakland, CA 94612
510 663-2070
510 663-2080 fax
www.integralgroup.com

REGISTERED PROFESSIONAL ENGINEER
JOHN P. McDONALD
No. M 30438
Exp. 12-31-17
MECHANICAL
STATE OF CALIFORNIA

MECHANICAL DETAILS

ITD HEADQUARTERS
393 13TH STREET
OAKLAND, CA 94612

BID SET

REVISIONS

No	Desc	Date
1	65% CD Set	2016-08-01
2	95% CD Set	2016-10-31
3	Bid Set	2016-11-15

© COPYRIGHT 2016

DATE: 03/31/2017

DRAWN BY: JM, EC

PROJECT NO.: 1203.22

M61

1500 13th Street
3/28/2017 4:08:45 PM
C:\Users\apazcoguin\Documents\IG - MEP - 13th Street - 16_apazcoguin.rvt

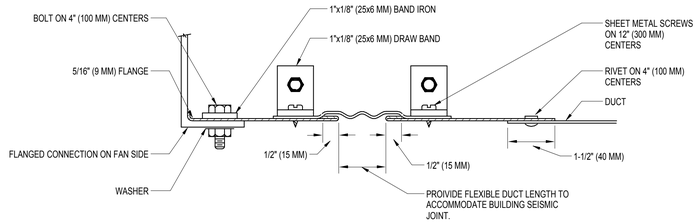

ROUND/OVAL FLEXIBLE CONNECTION

8 DUCT FLEXIBLE CONNECTION AT SEISMIC JOINT
N.T.S.

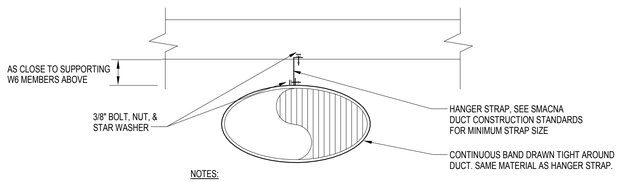

NOTES:

1. SEISMIC BRACING SHALL COMPLY WITH CBC CH. 16.
2. ALLOW FOR 3/4" DIFFERENTIAL MOVEMENT BETWEEN LOFT AND REST OF THE BUILDING. SEE 8/M62.

7 EXPOSED OVAL DUCTWORK SUPPORT BELOW LOFT
N.T.S.

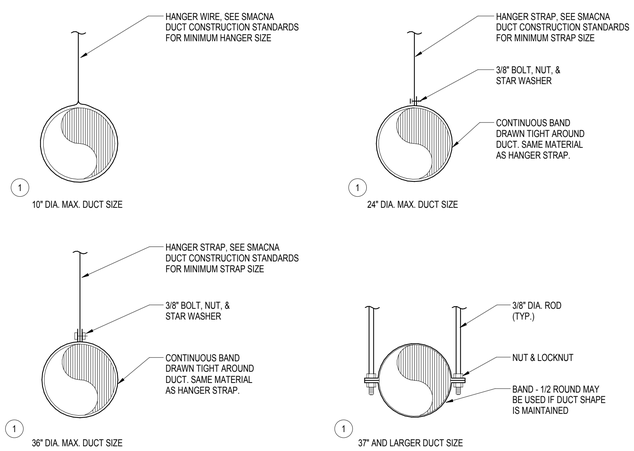

SHEET NOTES:

1. HANGERS MUST NOT DEFORM DUCT SHAPE
2. REFER TO 1/M62 FOR EXPOSED DUCT CONDITION

6 ROUND DUCT HANGING
N.T.S.

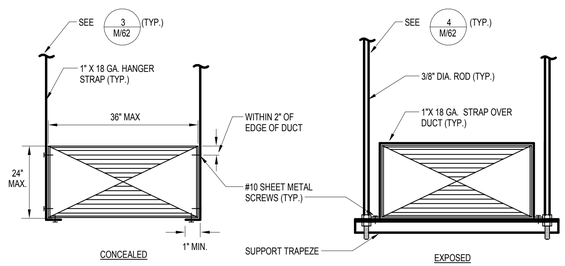

NOTES:

1. ALL INTERIOR DUCT CROSS SECTIONS ARE 6 SQ FT OR SMALLER

5 RECTANGULAR DUCT SUPPORT
N.T.S.

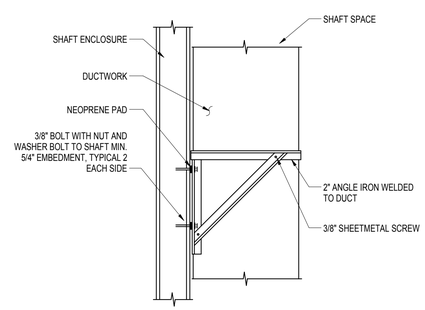

4 VERTICAL DUCT IN SHAFT SUPPORT DETAIL
N.T.S.

	WIRE	STRAP	ROD
CONCRETE OVER METAL DECK	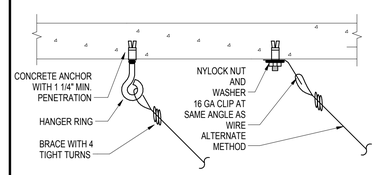	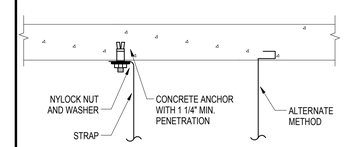	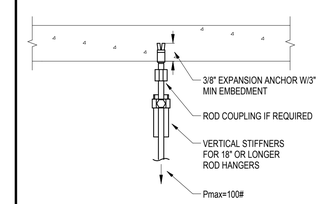

NOTES:

1. ANY OF THE OTHER ATTACHMENT METHODS DETAILED IN CHAPTER 1 OF THE SMACNA HVAC DUCT CONSTRUCTION STANDARDS MANUAL ARE ACCEPTABLE ATTACHMENT ALTERNATIVES TO ABOVE DETAILS
2. UNLESS OTHERWISE APPROVED, ALLOWABLE LOAD ON UPPER ATTACHMENT IS 1/4 OF FAILTURE LOAD.
3. PREVENT BENDING OF 90° BENDING STRAPS UNDER LOAD

3 ATTACHMENT DETAILS
N.T.S.

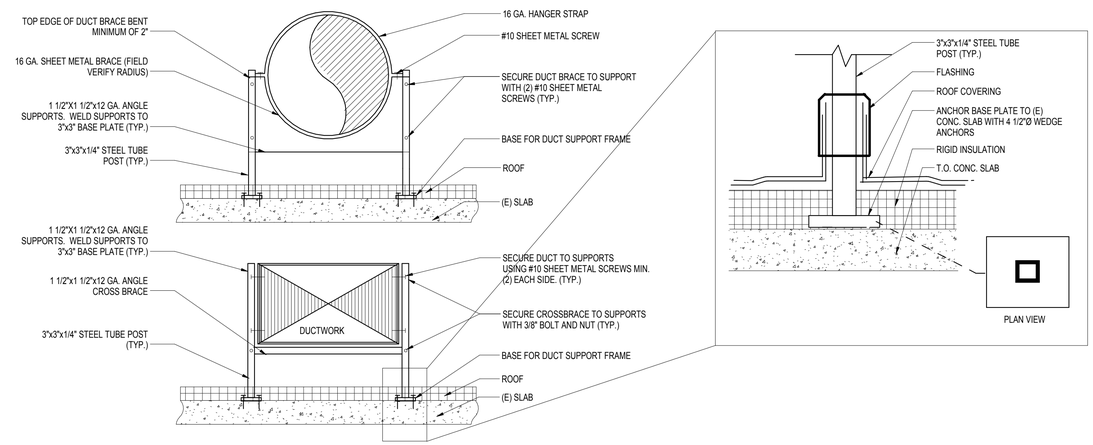

2 DUCT SUPPORT ON ROOF DETAIL
N.T.S.

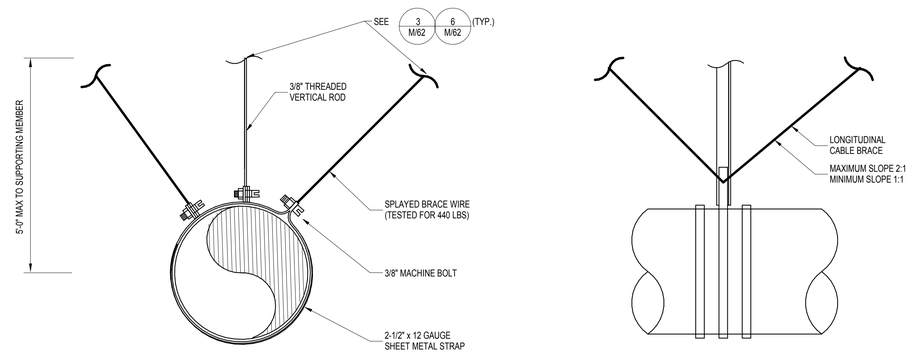

NOTES:

1. SEISMIC BRACING SHALL COMPLY WITH CBC CH. 16.

1 EXPOSED ROUND DUCTWORK SUPPORT
N.T.S.

KOMOROUS-TOWEY ARCHITECTS
410 TWELFTH STREET, SUITE 300
OAKLAND, CA 94612
Ph: 510.446.2244 Fx: 510.446.2242
ktc@ktarch.com www.ktarch.com

INTEGRAL GROUP
427 13th Street
Oakland, CA 94612
510 663-2070
510 663-2080 fax
www.integralgroup.com

REGISTERED PROFESSIONAL ENGINEER
JOHN P. McDONALD
No. M 30438
Exp. 12-31-17
MECHANICAL
STATE OF CALIFORNIA

MECHANICAL DETAILS

ITD HEADQUARTERS
393 13TH STREET
OAKLAND, CA 94612

BID SET

REVISIONS

No	Desc	Date
1	65% CD Set	2016-08-01
2	95% CD Set	2016-10-31
3	Bid Set	2016-11-15

© COPYRIGHT 2016

DATE: 03/31/2017

DRAWN BY: JM, EC

PROJECT NO.: 1203.22

M62

1500X 13th Street
3/28/2017 4:08:47 PM
C:\Users\apazcoguin\Documents\IG - MEP - 13th Street - 16_apazcoguin.rvt

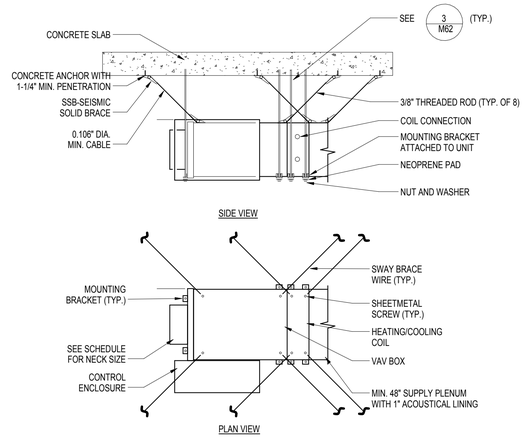

NOTE:
1. MOUNT WITH 1"x20 GA SHEETMETAL AND STRAP SECURE WITH SHEETMETAL SCREWS.

6 VAV BOX MOUNTING DETAIL
N.T.S.

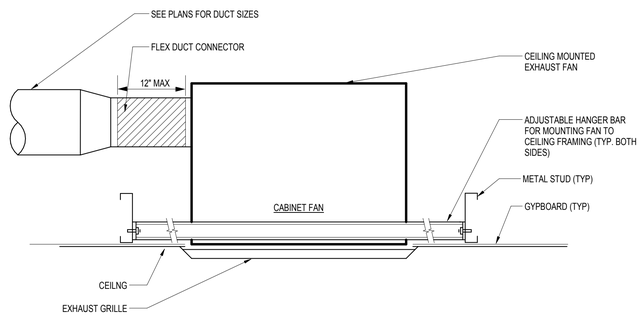

5 CEILING MOUNTED CABINET FAN DETAIL
N.T.S.

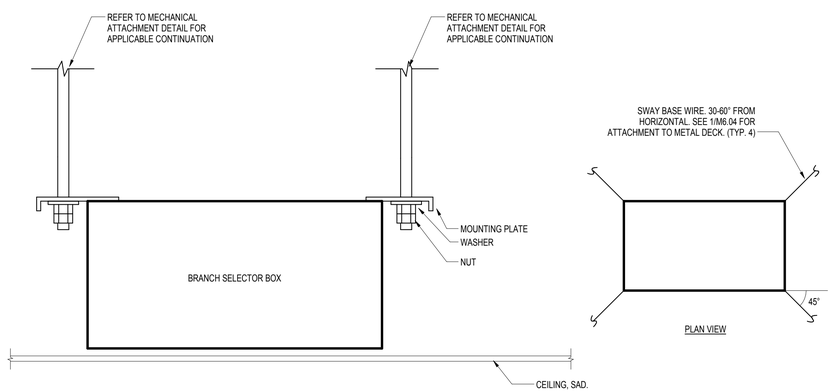

NOTES:
1. 20" SERVICING SPACE REQUIRED FOR 6 PORT UNIT

4 BRANCH SELECTOR BOX MOUNTING
N.T.S.

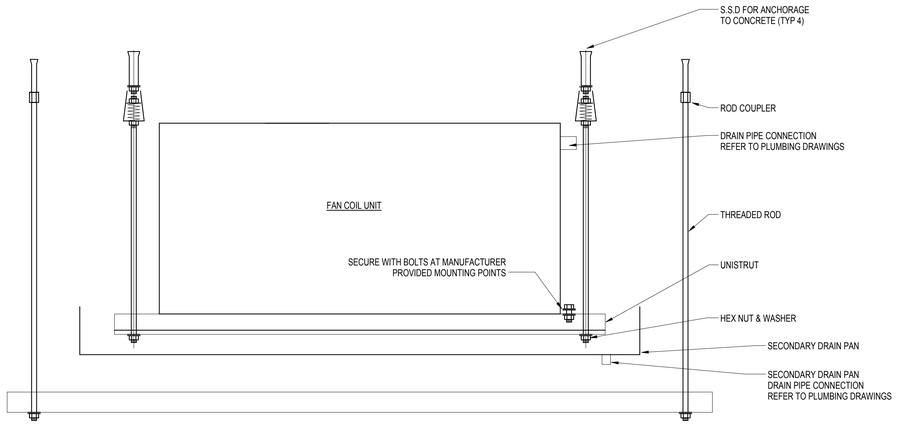

3 FAN COIL MOUNTING
N.T.S.

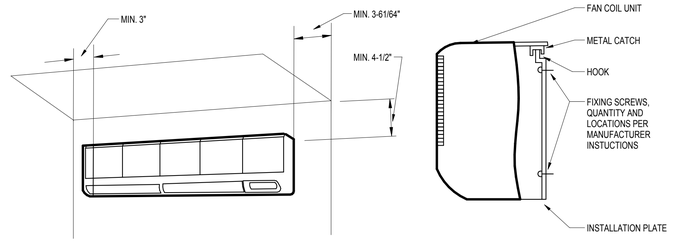

NOTES:

INSTALL ACCORDING TO MANUFACTURER INSTALLATION INSTRUCTIONS.

2 WALL-MOUNTED FAN COIL UNIT INSTALLATION
N.T.S.

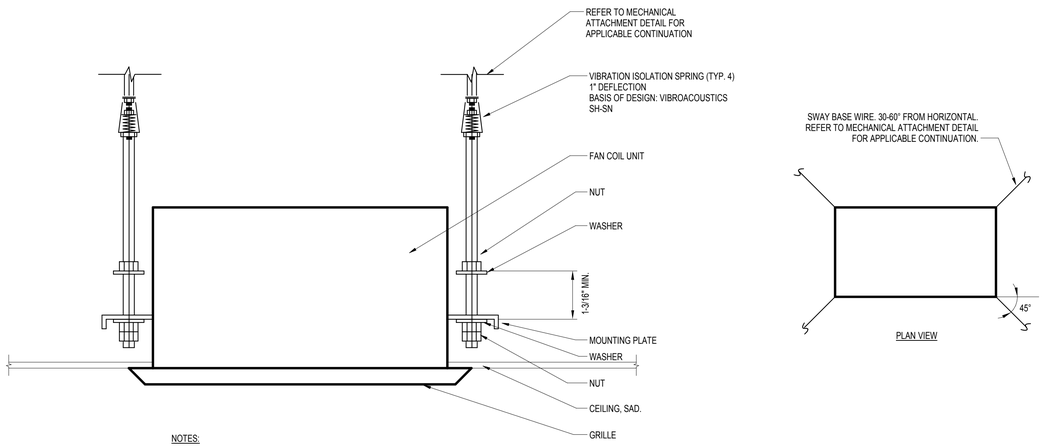

NOTES:
1. 60" OR MORE REQUIRED BELOW UNIT FOR MAINTENANCE.

1 CASSETTE-TYPE FAN COIL MOUNTING
N.T.S.

KOMOROUS-TOWEY ARCHITECTS
410 TWELFTH STREET, SUITE 300
OAKLAND, CA 94612
Ph: 510.446.2244 Fx: 510.446.2242
ktc@ktarch.com www.ktarch.com

INTEGRAL GROUP
427 13th Street
Oakland, CA 94612
510 663-2070
510 663-2080 fax
www.integralgroup.com

REGISTERED PROFESSIONAL ENGINEER
LONG P. McDONALD
No. M 30438
Exp. 12-31-17
MECHANICAL
STATE OF CALIFORNIA

MECHANICAL DETAILS

ITD HEADQUARTERS
393 13TH STREET
OAKLAND, CA 94612

BID SET

REVISIONS

No	Desc	Date
1	65% CD Set	2016-08-01
2	95% CD Set	2016-10-31
3	Bid Set	2016-11-15

© COPYRIGHT 2016

DATE: 03/31/2017
DRAWN BY: JM, EC
PROJECT NO.: 1203.22

M63

1500X 13th Street
3/28/2017 4:08:51 PM
C:\Users\spazzoguin\Documents\KG - MEP - 13th Street - 16_spazzoguin.rvt

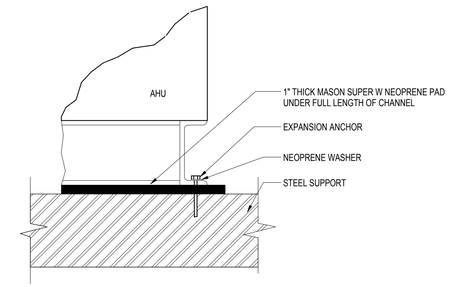

GENERAL NOTES:

1. AHU ANCHORAGE SHALL BE DESIGN/BUILD AND DEFERRED SUBMITTAL.

3 AHU MOUNTING
N.T.S.

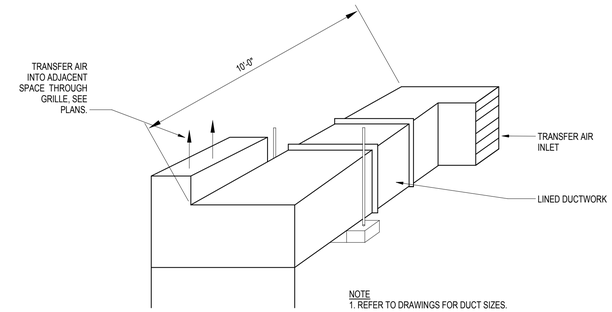

NOTE
1. REFER TO DRAWINGS FOR DUCT SIZES.

2 TRANSFER AIR ASSEMBLY
N.T.S.

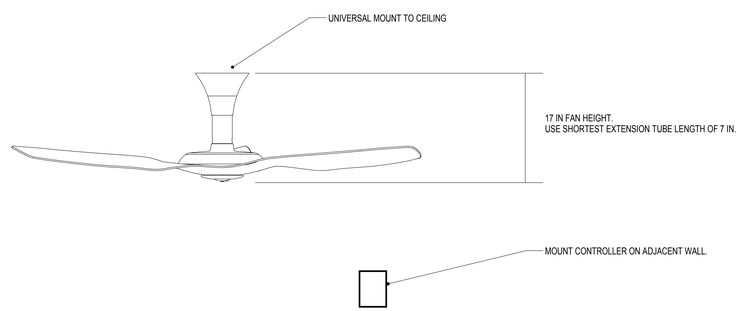

4 CEILING FAN INSTALLATION
N.T.S.

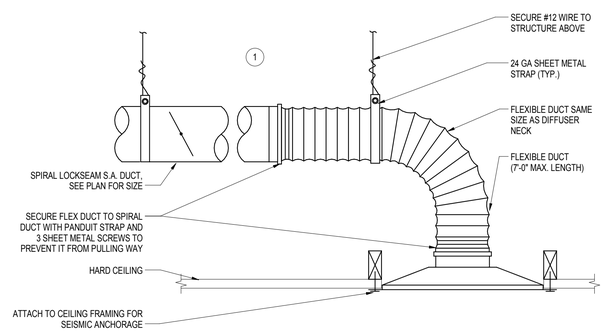

NOTES:

1. REFER TO SPECIFICATIONS FOR DUCTWORK INSULATION REQUIREMENTS.
2. IN LIEU OF THE SEISMIC ATTACHMENT CLIPS THE CONTRACTOR CAN PROVIDE CEILING DIFFUSERS WITH EARTHQUAKE TABS SECURE TO THE STRUCTURE WITH 12 GA WIRE.
3. IN LIEU OF SUPPORTING THE DUCT WITH 12 GAUGE WIRE THE CONTRACTOR CAN PROVIDE 2"-24 GA SHEETMETAL STRAP SECURED TO STRUCTURE.
4. PROVIDE MINIMUM RADIUS OF 1.5 DUCT DIAMETER FROM CENTER LINE OF DUCT.
5. NO OPPOSED BLADE BALANCING DAMPER UNLESS NOTED OTHERWISE.
6. PROVIDE FRAM FOR HARD CEILING AS REQUIRED.

SHEET NOTES

1. BALANCING DAMPER LOCATED AT BRANCH IN A ACCESSIBLE AREA OR MECHANICAL CHASE

1 SUPPLY AIR CEILING DIFFUSER DETAIL
N.T.S.

KOMOROUS-TOWEY ARCHITECTS
410 TWELFTH STREET, SUITE 300
OAKLAND, CA 94612
Ph: 510.446.2244 Fx: 510.446.2242
kta@ktarch.com www.ktarch.com

INTEGRAL GROUP
427 13th Street
Oakland, CA 94612
510 663-2070
510 663-2080 fax
www.integralgroup.com

REGISTERED PROFESSIONAL ENGINEER
JOHN P. McDONALD
No. M 30438
Exp. 12-31-17
MECHANICAL
STATE OF CALIFORNIA

MECHANICAL DETAILS

ITD HEADQUARTERS
393 13TH STREET
OAKLAND, CA 94612

BID SET

REVISIONS

No	Desc	Date
1	65% CD Set	2016-08-01
2	95% CD Set	2016-10-31
3	Bid Set	2016-11-15

© COPYRIGHT 2016

DATE: 03/31/2017

DRAWN BY: JM, EC

PROJECT NO.: 1203.22

M64

1300X 13th Street
3/28/2017 4:08:54 PM
C:\Users\apazzoguin\Documents\IG - MEP - 13th Street - 16_apazzoguin.rvt

AIR HANDLER CONTROL POINTS												
POINT DESCRIPTION	OUTSIDE AIR DAMPER END SWITCH	EXHAUST AIR DAMPER END SWITCH	HEAT WHEEL SUPPLY BYPASS DAMPER END SWITCH	HEAT WHEEL EXHAUST BYPASS DAMPER END SWITCH	HEAT WHEEL OUTSIDE AIR FILTER PRESSURE DROP	HEAT WHEEL EXHAUST AIR FILTER PRESSURE DROP	SUPPLY FILTER PRESSURE DROP	FORCED OCCUPIED MODE INPUT	FORCED HEATING MODE INPUT	FORCED COOLING MODE INPUT	FORCED DEHUMID-IFICATION MODE INPUT	SUPPLY AIR TEMPERATURE RESET SIGNAL
POINT TYPE	BI	BI	BI	BI	AI	AI	AI	BO	BO	BO	BO	AO
TRENDED POINT	X	X	X	X	X	X	X	X	X	X	X	X
TREND INTERVAL (1 MINUTE)	X	X	X	X	X	X	X	X	X	X	X	X
TREND STORAGE POINT (1 YEAR)	X	X	X	X	X	X	X	X	X	X	X	X
HARDWIRED(H)/CALCULATED(C)/NETWORKED(N)	H	H	H	H	H	H	H	H	H	H	H	H
EXPECTED RANGE					0" - 1.0"	0" - 1.0"	0" - 1.0"					

AIR HANDLER CONTROL POINTS (CONTINUED)														
POINT DESCRIPTION	OUTSIDE AIR TEMP	HEAT WHEEL LEAVING AIR TEMP (SUPPLY)	SUPPLY AIR TEMP	EXHAUST AIR TEMP	EXHAUST AIR HUMIDITY	HEAT WHEEL LEAVING AIR TEMP (EXHAUST)	SUPPLY FAN START/ STOP	SUPPLY FAN VFD FAULT	SUPPLY FAN SPEED COMMAND	EXHAUST FAN START/ STOP	EXHAUST FAN VFD FAULT	EXHAUST FAN SPEED COMMAND	DUCT STATIC PRESSURE	BUILDING STATIC PRESSURE
POINT TYPE	AI	AI	AI	AI	AI	AI	BO	BI	AO	BO	BI	AO	AI	AI
TRENDED POINT	X	X	X	X	X	X	X	X	X	X	X	X	X	X
TREND INTERVAL (1 MINUTE)	X	X	X	X	X	X	X	X	X	X	X	X	X	X
TREND STORAGE POINT (1 YEAR)	X	X	X	X	X	X	X	X	X	X	X	X	X	X
HARDWIRED(H)/CALCULATED(C)/NETWORKED(N)	H	H	H	H	H	H	H	H	H	H	H	H	H	H
EXPECTED RANGE														

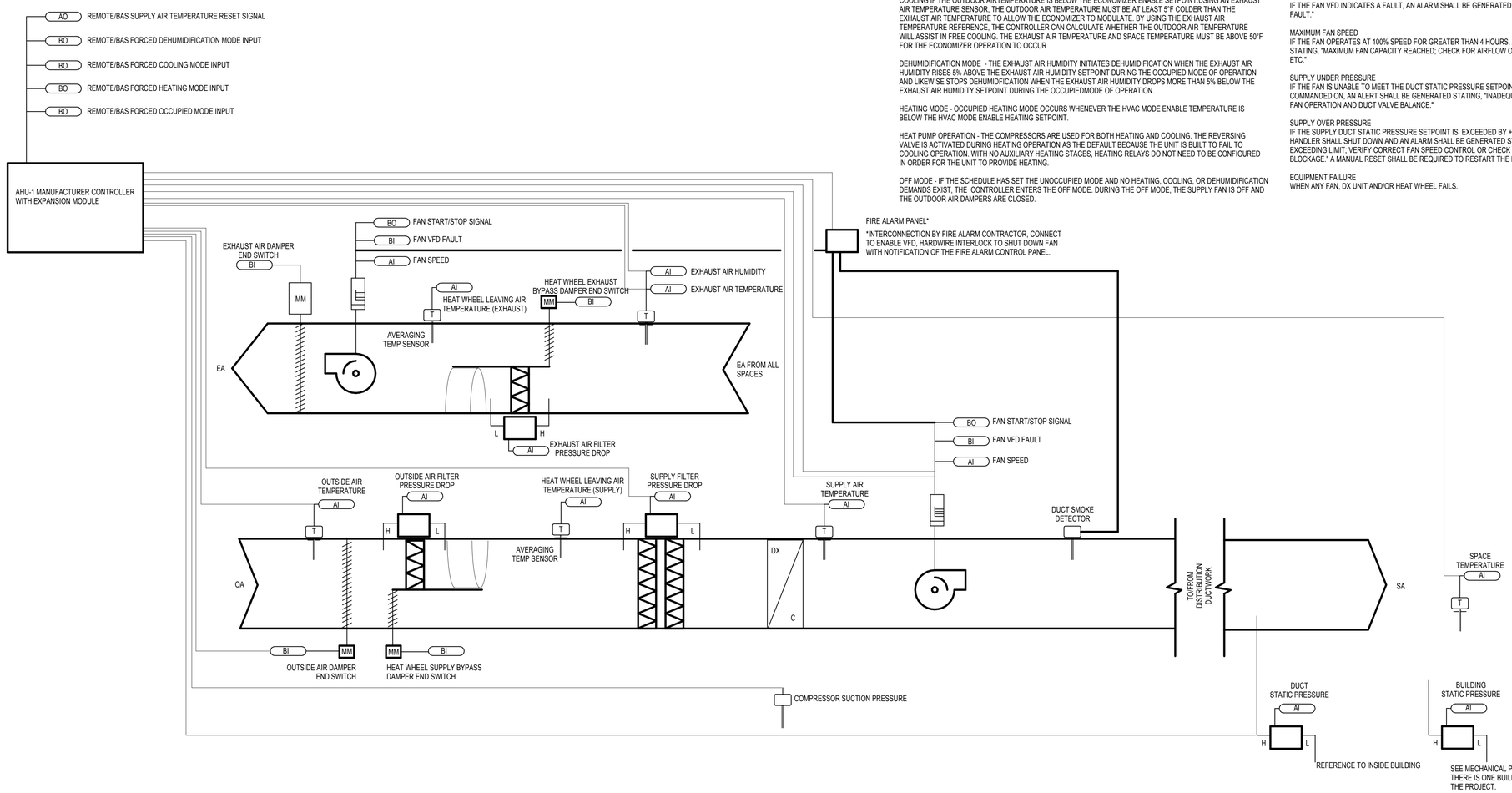

1 AIR HANDLER DOAS
1/2" = 1'-0"

SEQUENCE OF OPERATION: DEDICATED OUTSIDE AIR HANDLER (AHU-1)

ALL SUGGESTED SETPOINTS AND SETTINGS SHALL BE USER ADJUSTABLE IN BAS GRAPHICS.

1. GENERAL

THE AIR HANDLER PROVIDES TEMPERED OUTSIDE VENTILATION AIR TO THE ZONES SERVED, WITH HEATING AND COOLING CAPACITY TO MAINTAIN A NEUTRAL SUPPLY AIR TEMPERATURE AND TO PROVIDE DEWPOINT CONTROL. A HEAT RECOVERY WHEEL IN THE EXHAUST AIR STREAM PROVIDES BOTH PRE-HEAT AND PRE-COOLING OF THE OUTSIDE AIR SUPPLY AS WELL AS REHEAT DURING DEHUMIDIFICATION.

2. SCHEDULING

OCCUPIED HOURS SHALL BE DETERMINED BY A USER-ADJUSTABLE 24 HOUR, 365 DAY SCHEDULE LINKED TO THE BAS LIGHTING SCHEDULE. THE INITIAL SCHEDULE SHALL BE OCCUPIED EVERY WEEKDAY FROM 8 AM TO 6 PM AND UNOCCUPIED ON WEEKENDS AND HOLIDAYS. THE SCHEDULE IN THE BAS SHALL HAVE AN OVERRIDE FEATURE.

3. BUILDING AUTOMATION SYSTEM INTERFACE

THE BAS SHALL SEND THE AIR HANDLER CONTROLLER AN OCCUPIED OR UNOCCUPIED COMMAND BASED ON THE OCCUPIED HOURS SCHEDULE. IN ADDITION THE BAS SHALL BE ABLE TO SEND SENSOR INPUTS AND COMMANDS FOR SUPPLY AIR TEMPERATURE, VENT MODE OVERRIDE, COOLING MODE OVERRRIDE, HEATING MODE OVERRIDE, AND DEHUMIDIFICATION OVERRIDE.

THE BAS SHALL RECEIVE ALARM OUTPUT FROM THE AIR HANDLER CONTROLLER ALARM RELAY. IF COMMUNICATION IS LOST WITH THE BAS, THE AIR HANDLER CONTROLLER SHALL OPERATE IN OCCUPIED MODE USING DEFAULT OPERATION SETPOINTS AND AN ALARM SHALL BE GENERATED.

4. AIR HANDLER START/STOP

THE AIR HANDLER SHALL OPERATE STARTING 1 HOUR PRIOR TO SCHEDULED OCCUPANCY TO PROVIDE VENTILATION PURGE OF THE SPACE. THE AIR HANDLER SHALL STOP ONE HOUR AFTER SCHEDULED OCCUPANCY ENDS.

5. AIR HANDLER PACKAGE CONTROLLER MODES OF OPERATION

THE ONBOARD PACKAGE CONTROLLER OF THE AHU WILL CONTROL THE LOGIC FOR THE FOLLOWING MODES OF OPERATION.

VENT MODE - SUPPLY FAN RUNNING WITH NO HEATING, COOLING, OR DEHUMIDIFICATION DEMAND.

COOLING MODE - OCCUPIED COOLING MODE OCCURS WHENEVER THE HVAC MODE ENABLE TEMPERATURE IS ABOVE THE HVAC MODE ENABLE COOLING SETPOINT. THE ECONOMIZER IS USED AS THE FIRST STAGE OF COOLING IF THE OUTDOOR AIRTEMPERATURE IS BELOW THE ECONOMIZER ENABLE SETPOINT USING AN EXHAUST AIR TEMPERATURE SENSOR. THE OUTDOOR AIR TEMPERATURE MUST BE AT LEAST 5°F COLDER THAN THE EXHAUST AIR TEMPERATURE TO ALLOW THE ECONOMIZER TO MODULATE. BY USING THE EXHAUST AIR TEMPERATURE REFERENCE, THE CONTROLLER CAN CALCULATE WHETHER THE OUTDOOR AIR TEMPERATURE WILL ASSIST IN FREE COOLING. THE EXHAUST AIR TEMPERATURE AND SPACE TEMPERATURE MUST BE ABOVE 50°F FOR THE ECONOMIZER OPERATION TO OCCUR

DEHUMIDIFICATION MODE - THE EXHAUST AIR HUMIDITY INITIATES DEHUMIDIFICATION WHEN THE EXHAUST AIR HUMIDITY RISES 5% ABOVE THE EXHAUST AIR HUMIDITY SETPOINT DURING THE OCCUPIED MODE OF OPERATION AND LIKEWISE STOPS DEHUMIDIFICATION WHEN THE EXHAUST AIR HUMIDITY DROPS MORE THAN 5% BELOW THE EXHAUST AIR HUMIDITY SETPOINT DURING THE OCCUPIEDMODE OF OPERATION.

HEATING MODE - OCCUPIED HEATING MODE OCCURS WHENEVER THE HVAC MODE ENABLE TEMPERATURE IS BELOW THE HVAC MODE ENABLE HEATING SETPOINT.

HEAT PUMP OPERATION - THE COMPRESSORS ARE USED FOR BOTH HEATING AND COOLING. THE REVERSING VALVE IS ACTIVATED DURING HEATING OPERATION AS THE DEFAULT BECAUSE THE UNIT IS BUILT TO FAIL TO COOLING OPERATION. WITH NO AUXILIARY HEATING STAGES, HEATING RELAYS DO NOT NEED TO BE CONFIGURED IN ORDER FOR THE UNIT TO PROVIDE HEATING.

OFF MODE - IF THE SCHEDULE HAS SET THE UNOCCUPIED MODE AND NO HEATING, COOLING, OR DEHUMIDIFICATION DEMANDS EXIST, THE CONTROLLER ENTERS THE OFF MODE. DURING THE OFF MODE, THE SUPPLY FAN IS OFF AND THE OUTDOOR AIR DAMPERS ARE CLOSED.

6. AHU CONTROLLER SETPOINTS

HVAC MODE ENABLE SENSOR: SUPPLY AIR TEMPERATURE
SUPPLY AIR TEMPERATURE COOLING SETPOINT: 68°F
SUPPLY AIR TEMPERATURE HEATING SETPOINT: 72°F

DUCT STATIC PRESSURE SETPOINT: CONSTANT, AS DETERMINED BY THE BALANCE CONTRACTOR TO SUPPLY DESIGN AIRFLOW TO ALL TERMINALS. CONTROLS CONTRACTOR SHALL COORDINATE WITH BALANCER TO DETERMINE SETPOINT.

OUTDOOR AIR CFM: AS SCHEDULED

FAILURE CONDITION

7. FIRE ALARM

SHUT DOWN UNIT IN THE EVENT OF FIRE ALARM EVENT AT BUILDING OR AT AHU.

8. ALARMS

GENERAL
ALL ALARMS SHALL INCLUDE THE NAME OF THE AIR HANDLER GENERATING THE ALARM IN THE ALARM TEXT.

MAINTENANCE INTERVAL
WHEN FAN HAS OPERATED FOR MORE THAN 1500 HOURS. RESET INTERVAL COUNTER WHEN ALARM IS ACKNOWLEDGED.

HIGH SUPPLY AIR TEMPERATURE
WHEN SUPPLY AIR TEMPERATURE IS MORE THAN 5°F ABOVE SUPPLY AIR TEMPERATURE SETPOINT.

LOW SUPPLY AIR TEMPERATURE
WHEN SUPPLY AIR TEMPERATURE IS MORE THAN 5°F BELOW SUPPLY AIR TEMPERATURE SETPOINT.

MINIMUM OUTSIDE AIR
IF THE OA DAMPER DOES NOT PROVE OPEN AT ANY TIME WHEN IN OCCUPIED MODE, AN ALARM SHALL BE GENERATED STATING, "OA DAMPER DOES NOT PROVE OPEN."

FILTER MAINTENANCE
WHEN PRESSURE DROP ACROSS EITHER SET OF FILTERS RISES ABOVE 0.5" W.G., AN ALARM SHALL BE GENERATED STATING, "<NAME> CHANGE RECOMMENDED," WHERE <NAME> SHALL BE REPLACED WITH THE NAME OF FILTERS (PRE-FILTER OR FINAL FILTER) GENERATING THE ALARM.

FAN VFD FAULT
IF THE FAN VFD INDICATES A FAULT, AN ALARM SHALL BE GENERATED STATING, "SUPPLY FAN STATUS FAULT."

MAXIMUM FAN SPEED
IF THE FAN OPERATES AT 100% SPEED FOR GREATER THAN 4 HOURS, AN ALERT SHALL BE GENERATED STATING, "MAXIMUM FAN CAPACITY REACHED; CHECK FOR AIRFLOW OBSTRUCTION, EXCESSIVE LOAD, ETC."

SUPPLY UNDER PRESSURE
IF THE FAN IS UNABLE TO MEET THE DUCT STATIC PRESSURE SETPOINT FOR 2 HOURS WHILE COMMANDED ON, AN ALERT SHALL BE GENERATED STATING, "INADEQUATE SUPPLY AIR FLOW, VERIFY FAN OPERATION AND DUCT VALVE BALANCE."

SUPPLY OVER PRESSURE
IF THE SUPPLY DUCT STATIC PRESSURE SETPOINT IS EXCEEDED BY +1" W.G. AT ANY TIME, THE AIR HANDLER SHALL SHUT DOWN AND AN ALARM SHALL BE GENERATED STATING, "SUPPLY DUCT PRESSURE EXCEEDING LIMIT; VERIFY CORRECT FAN SPEED CONTROL OR CHECK FOR DOWNSTREAM AIR FLOW BLOCKAGE." A MANUAL RESET SHALL BE REQUIRED TO RESTART THE FAN.

EQUIPMENT FAILURE
WHEN ANY FAN, DX UNIT AND/OR HEAT WHEEL FAILS.

KOMOROUS-TOWEY ARCHITECTS
410 TWELFTH STREET, SUITE 300
OAKLAND, CA 94612
Ph: 510.446.2244 Fx: 510.446.2242
ktc@ktarch.com www.ktarch.com

INTEGRAL GROUP
427 13th Street
Oakland, CA 94612
510 663-2070
510 663-2080 fax
www.integralgroup.com

REGISTERED PROFESSIONAL ENGINEER
JOHN P. McDONALD
No. M 30438
Exp. 12-31-17
MECHANICAL
STATE OF CALIFORNIA

MECHANICAL CONTROLS

ITD HEADQUARTERS
393 13TH STREET
OAKLAND, CA 94612

BID SET

REVISIONS

No	Desc	Date
1	65% CD Set	2016-08-01
2	95% CD Set	2016-10-31
3	Bid Set	2016-11-15

© COPYRIGHT 2016

DATE: 03/31/2017

DRAWN BY: JM, EC

PROJECT NO.: 1203.22

M71

19XXX 12th Street
3/28/2017 4:08:57 PM
C:\Users\apazcoguin\Documents\IG - MEP - 13th Street - 16_apazcoguin.rvt

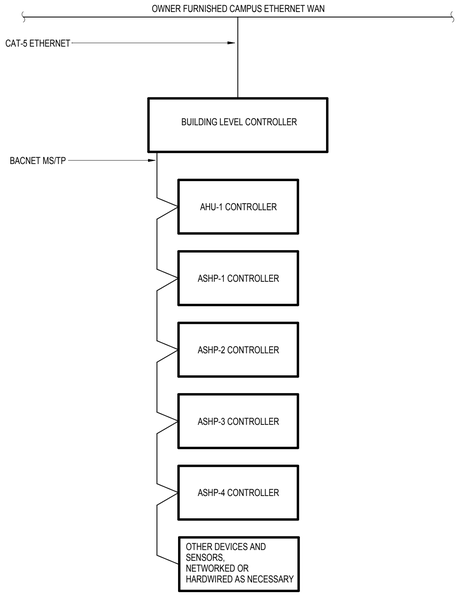

8 CONTROL SYSTEM ARCHITECTURE
N.T.S.

NON-HVAC MONITORING

1. COORDINATION
CONTROLS CONTRACTOR SHALL PROVIDE NECESSARY COMMUNICATION WIRING AND REQUIRED CONTROLS INFRATRUCTURE FOR ALL METERS THAT WILL BE INSTALLED AND SUPPLIED BY OTHER TRADES WITHIN THIS PROJECT.

2. UTILITY DEMAND RESPONSE
CONTRACTOR TO PROVIDE DRY CONTACT FOR FUTURE DEMAND RESPONSE SIGNAL INPUT FROM OTHERS. PROGRAMMING WITHIN THE BMS SHOULD BE DONE TO ALLOW FOR EASE OF MODIFICATION WHEN DEMAND RESPONSE IS INCOPORATED IN THE FUTURE.

NON-HVAC MONITORING POINTS	
POINT DESCRIPTION	DEMAND RESPONSE SIGNAL FROM UTILITIES
POINT TYPE	BI
TRENDED POINT	X
TREND INTERVAL (X = 5 MINUTE / C = CHANGE OF STATE)	C
TREND STORAGE POINT (1 YEAR)	X
HARDWIRED(H)/CALCULATED(C)/NETWORKED(N)	H

7 NON-HVAC MONITORING POINTS
N.T.S.

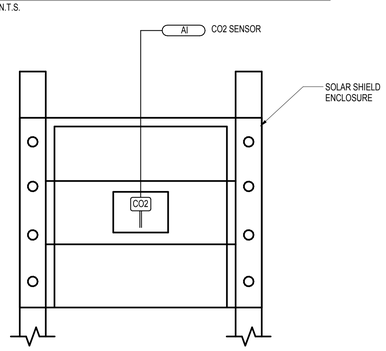

AMBIENT CO2 SENSOR MONITORING POINTS	
POINT DESCRIPTION	OUTDOOR AIR CO2 CONCENTRATION
POINT TYPE	AI
TRENDED POINT	X
TREND INTERVAL (X = 5 MINUTE / C = CHANGE OF STATE)	X
TREND STORAGE POINT (1 YEAR)	X
HARDWIRED(H)/CALCULATED(C)/NETWORKED(N)	H

6 OUTDOOR AMBIENT CO2 SENSOR DETAIL
N.T.S.

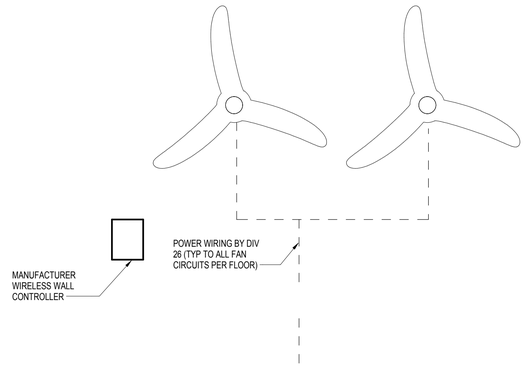

CEILING FAN CONTROL

1. VIA CEILING FAN LOCAL WALL CONTROLLERS PER DIVISION 26

5 CEILING FAN CONTROL
N.T.S.

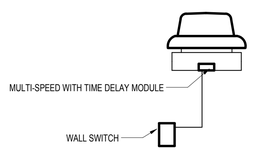

SEQUENCE OF OPERATION: EXHAUST FAN FOR HUDDLE/LACTATION ROOMS
(TYPICAL, SEE EQUIPMENT SCHEDULES)

1. FAN CONTROL

A. THE EXHAUST FAN SHALL BE LOCALLY CONTROLLED (NO BAS CONNECTION). WHILE UNOCCUPIED, THE MULTI-SPEED MODULE WILL RUN THE FAN AT A PRESET LOWER LEVEL. WHEN THE ROOM IS OCCUPIED, FLIPPING A WALL SWITCH WILL ELEVATE THE FAN SPEED TO A DESIGN LEVEL. A HIGH/LOW DELAY TIMER RETURNS THE FAN TO THE PRESET LOWER LEVEL AFTER A PERIOD OF TIME (USER CONFIGURABLE).

4 HUDDLE ROOM FAN
N.T.S.

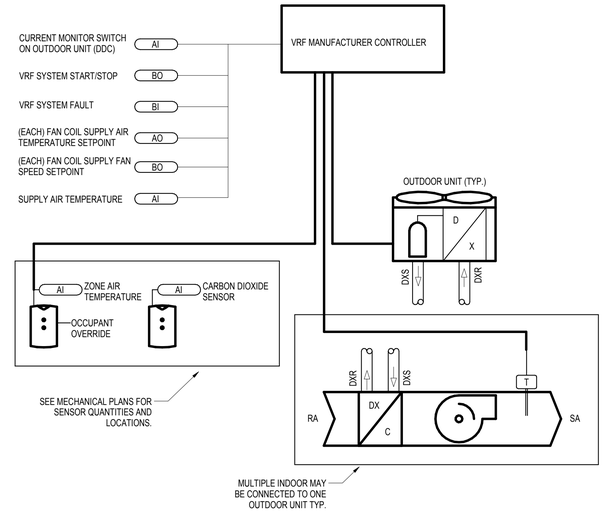

FAN COIL - VRF CONTROL POINTS								
POINT DESCRIPTION	CURRENT MONITOR SWITCH ON OUTDOOR UNIT (DDC)	VRF SYSTEM START/STOP	VRF SYSTEM FAULT	FAN COIL SUPPLY AIR TEMP SETPOINT	FAN COIL SUPPLY FAN SPEED SETPOINT	SUPPLY AIR TEMP	CARBON DIOXIDE SENSOR	ZONE AIR TEMP
POINT TYPE	AI	BO	BI	AO	BO	AI	AI	AI
TRENDED POINT	X	X	X	X	X	X	X	X
TREND INTERVAL (X = 1 MINUTE / C = CHANGE OF STATE)	X	C	C	X	X	X	X	X
TREND STORAGE POINT (1 YEAR)	X	X	X	X	X	X	X	X
HARDWIRED(H) / CALCULATED(C) / NETWORKED(N)	H	H	H	H	H	H	H	H
ALARMS: HIGH(H) / LOW(L) / STATUS(S)	S	H,L	S	H,L	H,L	H,L	H,L	H,L
EXPECTED RANGE				50-80°F		50-80°F		50-100°F

2 FAN COIL - VRF CONTROL
N.T.S.

SEQUENCE: FAN COIL - VRF (TYPICAL, SEE EQUIPMENT SCHEDULES)

ALL SUGGESTED SETPOINTS AND SETTINGS SHALL BE USER ADJUSTABLE IN BAS GRAPHICS.

1. GENERAL

A. VRF SYSTEM SHALL MAINTAIN ZONE TEMPERATURE SETPOINT. VRF SYSTEM SHALL BE ENABLED AND DISABLED BY BAS SCHEDULE. BAS SHALL MONITOR SPACE TEMPERATURES REPORTED BY VRF THERMOSTATS THROUGH VRF CONTROLLER.

2. SCHEDULING

A. OCCUPIED HOURS SHALL BE DETERMINED BY A USER ADJUSTABLE 24 HOUR, 365 DAY SCHEDULE FOR EACH FCU. IF THE SPACE IS SCHEDULED TO BE UNOCCUPIED AND THE SPACE IS OCCUPIED FOR MORE THAN 15 MINUTES ACCORDING TO OCCUPANT OVERRIDE INPUT (TYPICALLY A BUTTON ON THE TEMPERATURE SENSOR/THERMOSTAT PANEL), SET SPACE TO OCCUPIED FOR 2 HOURS.

B. ALL IDF/MDF ROOMS' FAN COILS SHALL BE INITIAL SCHEDULED TO HAVE 24/7 OPERATION.

3. FAN OPERATION

A. WHEN FAN COIL IS ENABLED AND ZONE AIR TEMPERATURE RISES ABOVE/BELOW THE ZONE AIR TEMPERATURE SETPOINT BY 1°F, FAN SHALL CYCLE ON. FAN SHALL OPERATE UNTIL ROOM IS COOLED/HEATED TO AN OFFSET OF 3°F BELOW/ABOVE THE ZONE AIR TEMPERATURE SETPOINT, THEN CYCLE OFF. OWNER SHALL HAVE THE ABILITY TO OVERRIDE FAN CYCLING AND SET IT TO CONTINUOUS OPERATION DURING SCHEDULED PERIODS VIA THE GRAPHICAL CONTROL INTERFACE.

4. FAN SPEED CONTROL

A. FAN COILS HAVE ELECTRICALLY COMMUTATED (EC) MOTORS, WHICH HAVE INHERENT VARIABLE SPEED CONTROL CAPABILITY WITHOUT NEED FOR A VFD. FAN SPEED SHALL BE SET AT BALANCE AT THE SPEED REQUIRED TO MAINTAIN DESIGN FAN COIL AIR FLOW. THIS SPEED SETTING SHALL BE SET AT THE BAS (REMOTE BALANCING) TO ALLOW REMOTE SPEED ADJUSTMENTS BY THE OPERATOR.

5. VRF CONTROL

A. UNLESS OTHERWISE NOTED ON DRAWINGS, THE VRF SYSTEM SHALL OPERATE VIA INTERNAL CONTROL SYSTEM TO MAINTAIN ZONE TEMPERATURE SET POINT.

6. TEMPERATURE SET POINT

A. ZONE COOLING TEMPERATURE SETPOINT FOR ALL IDF/MDF/ELECTRICAL ROOMS SHALL BE 80°F.

B. ZONE OCCUPIED (> 50 PPM + OA CO2 CONCENTRATION) COOLING TEMPERATURE SETPOINT FOR OTHER ZONES SHALL BE 75°F.

C. ZONE UNOCCUPIED (CO2 LEVELS EQUAL TO OA CO2 CONCENTRATION) COOLING TEMPERATURE SETPOINT FOR OTHER ZONES SHALL BE 80°F.

D. ZONE OCCUPIED (> 50 PPM + OA CO2 CONCENTRATION) HEATING TEMPERATURE SETPOINT FOR OTHER ZONES SHALL BE 70°F.

E. ZONE UNOCCUPIED (CO2 LEVELS EQUAL TO OA CO2 CONCENTRATION) HEATING TEMPERATURE SETPOINT FOR OTHER ZONES SHALL BE 60°F.

7. ALARMS

A. AN ALARM SHALL BE GENERATED ON ANY FAN COIL OR OUTDOOR UNIT FAILURE STATING, "<NAME OF UNIT> FAULT"

B. AN ALARM SHALL BE GENERATED UPON THE ZONE AIR TEMPERATURE DEVIATING FROM THE ZONE AIR TEMPERATURE SETPOINT BY +/-5°F FOR GREATER THAN 15 MINUTES.

C. IF ANY IDF/MDF ROOM IS ABOVE 80°F FOR 15 MINUTES, GENERATE AN ALARM.

D. IF ANY IDF/MDF ROOM IS ABOVE 90°F FOR 15 MINUTES, GENERATE AN LARM.

SEQUENCE: EXHAUST VALVE ZONE AIR CONTROL

ALL SUGGESTED SETPOINTS AND SETTINGS SHALL BE USER ADJUSTABLE IN BAS GRAPHICS.

1. GENERAL

A. UNDER TYPICAL OPERATION, ALL AIR FROM ALL SPACES IS EXHAUSTED FROM THE BUILDING TO AHU-1. THE EXHAUST VALVES MODULATE EXHAUST AIRFLOW TO BALANCE THE SUPPLIED VENTILATION AIRFLOWS.

IN DENSELY OCCUPIED SPACES (DEFINED BY SPACES WITH A CO2 SENSOR = CONFERENCE ROOMS), DEMAND CONTROL VENTILATION CONTROLS SHALL BE USED TO REDUCE VAV AIRFLOWS TO THE MINIMUM AIRFLOW SETPOINT (SHOWN IN SCHEDULES). THE EXHAUST VALVES SERVING THESE DENSELY OCCUPIED SPACES WILL ALSO REDUCE EXHAUST AIRFLOW TO THE MINIMUM AIRFLOW SETPOINT (SHOWN IN SCHEDULES) TO MATCH THE SUPPLY AIR FLOW TO ENSURE A BALANCED FLOW OF AIR IN THE ZONE.

2. DENSELY OCCUPIED SPACES - DEMAND CONTROL VENTILATION

A. WHEN A ZONE IS IN OCCUPIED MODE (> 50 PPM + OA CO2 CONCENTRATION, DETERMINED BY SUPPLY VENTILATION LOGIC), ITS ASSOCIATED EXHAUST VALVE IS SET TO MAINTAIN THE SCHEDULED VENTILATION DESIGN AIRFLOW SETPOINT.

B. WHEN A ZONE IS IN UNOCCUPIED MODE (CO2 LEVELS ARE EQUAL TO OA CO2 CONCENTRATION, DETERMINED BY SUPPLY VENTILATION LOGIC) CONTINUOUSLY FOR 15 MINUTES, THE EXHAUST VALVE SHALL MAINTAIN THE SCHEDULED MINIMUM AIRFLOW SETPOINT (AS SCHEDULED, WHICH IS 0.15 CFM/SF).

3. ALL OTHER SPACES

A. THE ZONE EXHAUST VALVE IS SET TO MAINTAIN THE SCHEDULED EXHAUST DESIGN AIRFLOW SETPOINT DURING SCHEDULED OCCUPIED HOURS.

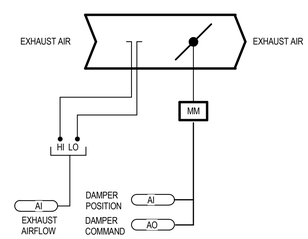

EXHAUST VALVE CONTROL POINTS			
POINT DESCRIPTION	EXHAUST AIRFLOW	EXHAUST VALVE DAMPER COMMAND	EXHAUST VALVE DAMPER POSITION
POINT TYPE	AI	AO	AI
TRENDED POINT	X	X	X
TREND INTERVAL (1 MINUTE)	X	X	X
TREND STORAGE POINT (1 YEAR)	X	X	X
HARDWIRED(H) / CALCULATED(C) / NETWORKED(N)	H	H	H
ALARMS: HIGH(H) / LOW(L) / STATUS(S)			L
EXPECTED RANGE	VARIES	0-100%	0-100%

3 EXHAUST VALVE CONTROL
N.T.S.

SEQUENCE: VAV ZONE AIR CONTROL (TYPICAL, SEE EQUIPMENT SCHEDULES)

ALL SUGGESTED SETPOINTS AND SETTINGS SHALL BE USER ADJUSTABLE IN BAS GRAPHICS.

1. GENERAL

A. THE VAV BOX DAMPER MODULATES AIR VOLUME TO PROVIDE VENTILATION. IN DENSELY OCCUPIED SPACES (DEFINED BY SPACES WITH A CO2 SENSOR = CONFERENCE ROOMS), DEMAND CONTROL VENTILATION CONTROLS SHALL BE USED TO REDUCE VAV AIRFLOWS TO THE MINIMUM AIRFLOW SETPOINT (SHOWN IN SCHEDULES AND DENOTED BY SPACES WITH CO2 SENSORS).

2. DENSELY OCCUPIED SPACES - DEMAND CONTROL VENTILATION

A. WHEN A ZONE IS IN OCCUPIED MODE (> 50 PPM + OA CO2 CONCENTRATION), ITS ASSOCIATED VAV BOX IS SET TO MAINTAIN THE SCHEDULED VENTILATION DESIGN AIRFLOW SETPOINT.

B. WHEN A ZONE IS IN UNOCCUPIED MODE (CO2 LEVELS ARE EQUAL TO OA CO2 CONCENTRATION) CONTINUOUSLY FOR 15 MINUTES, THE VAV BOX SHALL MAINTAIN THE VAV MINIMUM AIRFLOW SETPOINT (AS SCHEDULED, WHICH IS 0.15 CFM/SF).

3. ALL OTHER SPACES

A. THE ZONE VAV BOX IS SET TO MAINTAIN THE SCHEDULED VENTILATION DESIGN AIRFLOW SETPOINT DURING SCHEDULED OCCUPIED HOURS.

5. ALARMS

A. IF ANY ZONE WITH CO2 MONITORING AND CONTROL EXCEEDS 1000 PPM CO2 FOR 15 MINUTES, GENERATE AN ALARM STATING, "INADEQUATE VENTILATION AIR TO <ZONE>," WHERE <ZONE> SHALL BE REPLACED WITH THE NAME OF THE ZONE GENERATING THE ALARM.

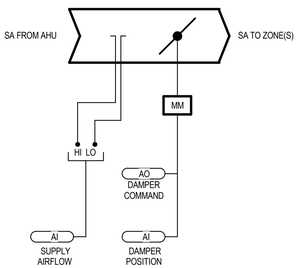

DENSELY-OCCUPIED ZONE CONTROL

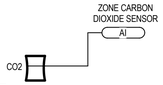

ZONE VENTILATION CONTROL POINTS				
POINT DESCRIPTION	SUPPLY AIRFLOW	DAMPER COMMAND	DAMPER POSITION	ZONE CARBON DIOXIDE SENSOR
POINT TYPE	AI	AO	AI	AI
TRENDED POINT	X	X	X	X
TREND INTERVAL (1 MINUTE)	X	X	X	X
TREND STORAGE POINT (1 YEAR)	X	X	X	X
HARDWIRED(H)/CALCULATED(C)/NETWORKED(N)	H	H	H	H
ALARMS: HIGH(H) / LOW(L) / STATUS(S)	L			H
EXPECTED RANGE	0-900 CFM	0-100%	0-100%	0-2000 PPM

1 VENTILATION ZONE VAV CONTROL
N.T.S.

KOMOROUS-TOWEY ARCHITECTS
410 TWELFTH STREET, SUITE 300
OAKLAND, CA 94612
Ph: 510.446.2244 Fx: 510.446.2242
ktc@ktarch.com www.ktarch.com

INTEGRAL GROUP
427 13th Street
Oakland, CA 94612
510 663-2070
510 663-2080 fax
www.integralgroup.com

REGISTERED PROFESSIONAL ENGINEER
JOHN P. McDONALD
No. M 30438
Exp. 12-31-17
MECHANICAL
STATE OF CALIFORNIA

MECHANICAL CONTROLS

ITD HEADQUARTERS
393 13TH STREET
OAKLAND, CA 94612

BID SET

REVISIONS

No	Desc	Date
1	65% CD Set	2016-08-01
2	95% CD Set	2016-10-31
3	Bid Set	2016-11-15

© COPYRIGHT 2016

DATE: 03/31/2017

DRAWN BY: JM, EC

PROJECT NO.: 1203.22

M72

1500X 13th Street
3/28/2017 4:09:01 PM
C:\Users\japazcoguin\Documents\IG - MEP - 13th Street - 16_apazcoguin.rvt

STATE OF CALIFORNIA
MECHANICAL SYSTEMS
CEC-NRCC-MCH-01-E (Revised 08/15) — CALIFORNIA ENERGY COMMISSION

CERTIFICATE OF COMPLIANCE	NRCC-MCH-01-E
Mechanical Systems	Page 1 of 4
Project Name: ITD Headquarters	Date Prepared: 10/31/2016

A. MECHANICAL COMPLIANCE FORMS & WORKSHEETS (check box if worksheet is included)

For detailed instructions on the use of this and all Energy Efficiency Standards compliance forms, refer to the 2013 Nonresidential Manual
Note: The Enforcement Agency may require all forms to be incorporated onto the building plans.

YES	NO	Form/Worksheet #	Title
☒	☐	NRCC-MCH-01-E (Part 1 of 3)	Certificate of Compliance, Declaration. Required on plans for all submittals.
☒	☐	NRCC-MCH-01-E (Part 2 of 3)	Certificate of Compliance, Required Acceptance Tests (MCH-02A to 11A). Required on plans for all submittals.
☒	☐	NRCC-MCH-01-E (Part 3 of 3)	Certificate of Compliance, Required Acceptance Tests (MCH-12A to 18A). Required on plans where applicable.
☒	☐	NRCC-MCH-02-E (Part 1 of 2)	Mechanical Dry Equipment Summary is required for all submittals with Central Air Systems. It is optional on plans.
☐	☒	NRCC-MCH-02-E (Part 2 of 2)	Mechanical Wet Equipment Summary is required for all submittals with chilled water, hot water or condenser water systems. It is optional on plans.
☒	☐	NRCC-MCH-03-E	Mechanical Ventilation and Reheat is required for all submittals with multiple zone heating and cooling systems. It is optional on plans.
☐	☒	NRCC-MCH-07-E (Part 1 of 2)	Power Consumption of Fans. Required on plans where applicable
☐	☒	NRCC-MCH-07-E (Part 2 of 2)	Power Consumption of Fans, Declaration. Required on plans where applicable

STATE OF CALIFORNIA
MECHANICAL SYSTEMS
CEC-NRCC-MCH-01-E (Revised 08/15) — CALIFORNIA ENERGY COMMISSION

CERTIFICATE OF COMPLIANCE	NRCC-MCH-01-E
Mechanical Systems	Page 2 of 4
Project Name: ITD Headquarters	Date Prepared: 11/15/2016

B. MECHANICAL HVAC ACCEPTANCE FORMS (check box for required forms)

Test Performed By:

Designer:
This form is to be used by the designer and attached to the plans. Listed below are all the acceptance tests for HVAC systems. The designer is required to check the applicable boxes for all acceptance tests that apply and list all equipment that requires an acceptance test. All equipment of the same type that requires a test, list the equipment description and the number of systems.

Installing Contractor:
The contractor who installed the equipment is responsible to either conduct the acceptance test them self or have a qualified entity run the test for them. If more than one person has responsibility for the acceptance testing, each person shall sign and submit the Certificate of Acceptance applicable to the portion of the construction or installation for which they are responsible.

Enforcement Agency:
Plancheck - The NRCC-MCH-01-E form is not considered a completed form and is not to be accepted by the building department unless the correct boxes are checked.
Inspector - Before occupancy permit is granted all newly installed process systems must be tested to ensure proper operations.

Test Description		MCH-02A	MCH-03A	MCH-04A	MCH-05A	MCH-06A	MCH-07A	MCH-08A	MCH-09A	MCH-10A	MCH-11A
Equipment Requiring Testing or Verification	# of Units	Outdoor Air	Single Zone Unitary	Air Distribution Ducts	Economizer Controls	Demand Controlled Ventilation (DCV)	Supply Fan VAV	Valve Leakage Test	Supply Water Temp. Reset	Hydronic System Variable Flow Control	Automatic Demand Shed Control
DOAS AHU	1	☒	☐	☐	☒	☒	☒	☐	☐	☐	☐
ASHP	3	☐	☐	☐	☐	☐	☐	☐	☐	☐	☐
		☐	☐	☐	☐	☐	☐	☐	☐	☐	☐
		☐	☐	☐	☐	☐	☐	☐	☐	☐	☐
		☐	☐	☐	☐	☐	☐	☐	☐	☐	☐
		☐	☐	☐	☐	☐	☐	☐	☐	☐	☐

Add Row — Remove Last

STATE OF CALIFORNIA
MECHANICAL SYSTEMS
CEC-NRCC-MCH-01-E (Revised 08/15) — CALIFORNIA ENERGY COMMISSION

CERTIFICATE OF COMPLIANCE	NRCC-MCH-01-E
Mechanical Systems	Page 3 of 4
Project Name: ITD Headquarters	Date Prepared: 11/15/2016

C. MECHANICAL HVAC ACCEPTANCE FORMS (check box for required forms)

Test Performed By:

Designer:
This form is to be used by the designer and attached to the plans. Listed below are all the acceptance tests for HVAC systems. The designer is required to check the applicable boxes for all acceptance tests that apply and list all equipment that requires an acceptance test. All equipment of the same type that requires a test, list the equipment description and the number of systems.

Installing Contractor:
The contractor who installed the equipment is responsible to either conduct the acceptance test them self or have a qualified entity run the test for them. If more than one person has responsibility for the acceptance testing, each person shall sign and submit the Certificate of Acceptance applicable to the portion of the construction or installation for which they are responsible.

Enforcement Agency:
Plancheck - The NRCC-MCH-01-E form is not considered a completed form and is not to be accepted by the building department unless the correct boxes are checked.
Inspector - Before occupancy permit is granted all newly installed process systems must be tested to ensure proper operations.

Test Description		MCH-12A	MCH-13A	MCH-14A	MCH-15A	MCH-16A	MCH-17A	MCH-18A
Equipment Requiring Testing or Verification	# of Units	Fault Detection & Diagnostics for DX Units	Automatic Fault Detection & Diagnostics for Air & Zone	Distributed Energy Storage DX AC Systems	Thermal Energy Storage (TES) Systems	Supply Air Temperature Reset Controls	Condenser Water Reset Controls	ECMS
DOAS AHU	1	☒	☐	☐	☐	☒	☐	☒
ASHP	3	☒	☐	☐	☐	☐	☐	☒
		☐	☐	☐	☐	☐	☐	☐
		☐	☐	☐	☐	☐	☐	☐
		☐	☐	☐	☐	☐	☐	☐
		☐	☐	☐	☐	☐	☐	☐

Add Row — Remove Last

STATE OF CALIFORNIA
HVAC SYSTEM REQUIREMENTS
CEC-NRCC-MCH-02-E (Revised 08/15) — CALIFORNIA ENERGY COMMISSION

CERTIFICATE OF COMPLIANCE	NRCC-MCH-02-E
HVAC Dry System Requirements	(Page 1 of 3)
Project Name: ITD Headquarters	Date Prepared: 11/15/2016

A. Equipment Tags and System Description[1]		AHU-1	ASHP-1	ASHP-2
MANDATORY MEASURES	*T-24 Sections*	*Reference to the Requirements in the Contract Documents[2]*		
Heating Equipment Efficiency[3]	110.1 or 110.2(a)	M02-M03	M02-M03	M02-M03
Cooling Equipment Efficiency[3]	110.1 or 110.2(a)	M02-M03	M02-M03	M02-M03
HVAC or Heat Pump Thermostats	110.2(b), 110.2(c)	M31-M35	M31-M35	M31-M35
Furnace Standby Loss Control	110.2(d)	NA	NA	NA
Low leakage AHUs	110.2(f)	Spec 237311	NA	NA
Ventilation[4]	120.1(b)	M02-M03	NA	NA
Demand Control Ventilation[5]	120.1(c)4	M02-M03 M31-M35	NA	NA
Occupant Sensor Ventilation Control[6]	120.1(c)5, 120.2(e)3	NA	NA	NA
Shutoff and Reset Controls[7]	120.2(e)	M71-M72	M71-M72	M71-M72
Outdoor Air and Exhaust Damper Control	120.2(f)	M71-M72	NA	NA
Isolation Zones	120.2(g)	M31-M35	M31-M35	M31-M35
Automatic Demand Shed Controls	120.2(h)	M71-M72	M71-M72	M71-M72
Economizer FDD	120.2(i)	M71-M72	M71-M72	M71-M72
Duct Insulation	120.4	Spec 230713	NA	NA
PRESCRIPTIVE MEASURES				
Equipment is sized in conformance with 140.4 (a & b)	140.4(a & b)	◉ Yes ○ No	◉ Yes ○ No	◉ Yes ○ No
Supply Fan Pressure Control	140.4(c)	M71-M72	NA	NA
Simultaneous Heat/Cool[8]	140.4(d)	M71-M72	M71-M72	M71-M72
Economizer	140.4(e)	M71-M72	NA	NA
Heat and Cool Air Supply Reset	140.4(f)	M71-M72	NA	NA
Electric Resistance Heating[9]	140.4(g)	NA	M71-M72	M71-M72
Duct Leakage Sealing and Testing.[10]	140.4(l)	Spec 230593 230[illegible]	NA	NA

Notes:
1. *Provide equipment tags (e.g. AHU 1 to 10) and system description (e.g. Single Duct VAV reheat) as appropriate. Multiple units with common requirements can be grouped together.*
2. *Provide references to plans (i.e. Drawing Sheet Numbers) and/or specifications (including Section name/number and relevant paragraphs) where each requirement is specified. Enter "N/A" if the requirement is not applicable to this system.*
3. *The referenced plans and specifications must include all of the following information: equipment tag, equipment nominal capacity, Title 24 minimum efficiency requirements, and actual rated equipment efficiencies. Where multiple efficiency requirements are applicable (e.g. full- and part-load) include all. Where appliance standards apply (110.1), identify where equipment is required to be listed per Title 20 1601 et seq.*
4. *Identify where the ventilation requirements are documented for each central HVAC system. Include references to both central unit schedules and sequences of operation. If one or more space is naturally ventilated identify where this is documented in the plans and specifications. Multiple zone central air systems must also provide a MCH-03-E form.*
5. *If one or more space has demand controlled ventilation identify where it is specified including the sensor specifications and the sequence of operation.*
6. *If one or more space has occupant sensor ventilation control identify where it is specified including the sensor specifications and the sequence of operation*
7. *If the system is DDC identify the sequences for the system start/stop, optimal start, setback (if required) and setup (if required). For all systems identify the specification for the thermostats and time clocks (if applicable).*
8. *Identify where the heating, cooling and deadband airflows are scheduled for this system. Include a reference to the specification of the zone controls. Provide a MCH-03-E form.*
9. *Enter N/A if there is no electric heating. If the system has electric heating indicate which exception to 140.4(g) applies.*
10. *If duct leakage sealing and testing is required, a MCH-04-A form must be submitted.*

STATE OF CALIFORNIA
HVAC SYSTEM REQUIREMENTS
CEC-NRCC-MCH-02-E (Revised 08/15) — CALIFORNIA ENERGY COMMISSION

CERTIFICATE OF COMPLIANCE	NRCC-MCH-02-E
HVAC Dry System Requirements	(Page 1 of 3)
Project Name: ITD Headquarters	Date Prepared: 11/15/2016

A. Equipment Tags and System Description[1]		ASHP-3	ASHP-4	
MANDATORY MEASURES	*T-24 Sections*	*Reference to the Requirements in the Contract Documents[2]*		
Heating Equipment Efficiency[3]	110.1 or 110.2(a)	M02-M03	M02-M03	
Cooling Equipment Efficiency[3]	110.1 or 110.2(a)	M02-M03	M02-M03	
HVAC or Heat Pump Thermostats	110.2(b), 110.2(c)	M31-M35	M31-M35	
Furnace Standby Loss Control	110.2(d)	NA	NA	
Low leakage AHUs	110.2(f)	NA	NA	
Ventilation[4]	120.1(b)	NA	NA	
Demand Control Ventilation[5]	120.1(c)4	NA	NA	
Occupant Sensor Ventilation Control[6]	120.1(c)5, 120.2(e)3	NA	NA	
Shutoff and Reset Controls[7]	120.2(e)	M71-M72	M71-M72	
Outdoor Air and Exhaust Damper Control	120.2(f)	NA	NA	
Isolation Zones	120.2(g)	M31-M35	M31-M35	
Automatic Demand Shed Controls	120.2(h)	M71-M72	M71-M72	
Economizer FDD	120.2(i)	M71-M72	M71-M72	
Duct Insulation	120.4	NA	NA	
PRESCRIPTIVE MEASURES				
Equipment is sized in conformance with 140.4 (a & b)	140.4(a & b)	◉ Yes ○ No	◉ Yes ○ No	○ Yes ○ No
Supply Fan Pressure Control	140.4(c)	NA	NA	
Simultaneous Heat/Cool[8]	140.4(d)	M71-M72	M71-M72	
Economizer	140.4(e)	NA	NA	
Heat and Cool Air Supply Reset	140.4(f)	NA	NA	
Electric Resistance Heating[9]	140.4(g)	M71-M72	M71-M72	
Duct Leakage Sealing and Testing.[10]	140.4(l)	NA	NA	

Notes:
1. *Provide equipment tags (e.g. AHU 1 to 10) and system description (e.g. Single Duct VAV reheat) as appropriate. Multiple units with common requirements can be grouped together.*
2. *Provide references to plans (i.e. Drawing Sheet Numbers) and/or specifications (including Section name/number and relevant paragraphs) where each requirement is specified. Enter "N/A" if the requirement is not applicable to this system.*
3. *The referenced plans and specifications must include all of the following information: equipment tag, equipment nominal capacity, Title 24 minimum efficiency requirements, and actual rated equipment efficiencies. Where multiple efficiency requirements are applicable (e.g. full- and part-load) include all. Where appliance standards apply (110.1), identify where equipment is required to be listed per Title 20 1601 et seq.*
4. *Identify where the ventilation requirements are documented for each central HVAC system. Include references to both central unit schedules and sequences of operation. If one or more space is naturally ventilated identify where this is documented in the plans and specifications. Multiple zone central air systems must also provide a MCH-03-E form.*
5. *If one or more space has demand controlled ventilation identify where it is specified including the sensor specifications and the sequence of operation.*
6. *If one or more space has occupant sensor ventilation control identify where it is specified including the sensor specifications and the sequence of operation*
7. *If the system is DDC identify the sequences for the system start/stop, optimal start, setback (if required) and setup (if required). For all systems identify the specification for the thermostats and time clocks (if applicable).*
8. *Identify where the heating, cooling and deadband airflows are scheduled for this system. Include a reference to the specification of the zone controls. Provide a MCH-03-E form.*
9. *Enter N/A if there is no electric heating. If the system has electric heating indicate which exception to 140.4(g) applies.*
10. *If duct leakage sealing and testing is required, a MCH-04-A form must be submitted.*

STATE OF CALIFORNIA
MECHANICAL SYSTEMS
CEC-NRCC-MCH-01-E (Revised 08/15) — CALIFORNIA ENERGY COMMISSION

CERTIFICATE OF COMPLIANCE	NRCC-MCH-01-E
Mechanical Systems	Page 4 of 4
Project Name: ITD Headquarters	Date Prepared: 11/15/2016

DOCUMENTATION AUTHOR'S DECLARATION STATEMENT
1. I certify that this Certificate of Compliance documentation is accurate and complete.

Documentation Author Name:	Eric Chang	Documentation Author Signature:	
Company:	Integral Group	Signature Date:	11/15/2016
Address:	427 13th St	CEA/ HERS Certification Identification (if applicable):	
City/State/Zip:	Oakland, CA 94612	Phone:	510 663 2070

RESPONSIBLE PERSON'S DECLARATION STATEMENT
I certify the following under penalty of perjury, under the laws of the State of California:
1. The information provided on this Certificate of Compliance is true and correct.
2. I am eligible under Division 3 of the Business and Professions Code to accept responsibility for the building design or system design identified on this Certificate of Compliance (responsible designer).
3. The energy features and performance specifications, materials, components, and manufactured devices for the building design or system design identified on this Certificate of Compliance conform to the requirements of Title 24, Part 1 and Part 6 of the California Code of Regulations.
4. The building design features or system design features identified on this Certificate of Compliance are consistent with the information provided on other applicable compliance documents, worksheets, calculations, plans and specifications submitted to the enforcement agency for approval with this building permit application.
5. I will ensure that a completed signed copy of this Certificate of Compliance shall be made available with the building permit(s) issued for the building, and made available to the enforcement agency for all applicable inspections. I understand that a completed signed copy of this Certificate of Compliance is required to be included with the documentation the builder provides to the building owner at occupancy.

Responsible Designer Name:	John McDonald	Responsible Designer Signature:	
Company :	Integral Group	Date Signed:	10/31/2016
Address:	427 13th St	License:	M30438
City/State/Zip:	Oakland, CA 94612	Phone:	510 663 2070

KOMOROUS-TOWEY ARCHITECTS
410 TWELFTH STREET, SUITE 300
OAKLAND, CA 94612
Ph: 510.446.2244 Fax: 510.446.2242
kta@ktarch.com www.ktarch.com

INTEGRAL GROUP
427 13th Street
Oakland, CA 94612
510 663-2070
510 663-2080 fax
www.integralgroup.com

REGISTERED PROFESSIONAL ENGINEER — JOHN P. McDONALD — No. M 30438 Exp. 12-31-17 — MECHANICAL — STATE OF CALIFORNIA

MECHANICAL T-24

ITD HEADQUARTERS
393 13TH STREET
OAKLAND, CA 94612

BID SET

REVISIONS

No	Desc	Date
1	65% CD Set	2016-08-01
2	95% CD Set	2016-10-31
3	Bid Set	2016-11-15

© COPYRIGHT 2016

DATE: 03/31/2017
DRAWN BY: JM, EC
PROJECT NO.: 1203.22

M81

1300X 13th Street
3/28/2017 4:09:04 PM
C:\Users\apazzoguin\Documents\IG - MEP - 13th Street - 16_apazzoguin.rvt

MECHANICAL VENTILATION AND REHEAT																			NRCC-MCH-03-E
PROJECT NAME	ITD HEADQUARTERS																DATE		11/15/2016
						MECHANICAL VENTILATION §121(b)2								REHEAT LIMITATION §144(d)			DEADBAND LIMITATION §144(d)		
ACTUAL DESIGN INFO (FROM EQUIPMENT SCHEDULES, ETC)						AREA BASIS			OCCUPANCY BASIS			MINIMUM		VAV Reheated Primary Air CFM			VAV Deadband Primary Air CFM		
A	B	C	D	E	F	G	H	I	J	K	L	M	N	O	P	Q	R	S	T
ZONE/SYSTEM VAV BOX TAG	DESIGN PRIMARY COOLING AIRFLOW (CFM)	DESIGN PRIMARY DEADBAND AIRFLOW (CFM)	DESIGN PRIMARY HEATING AIRFLOW (CFM)	CONTROL TYPE DDC (Y/N)	TRANSFER AIRFLOW (CFM)	CONDITIONED AREA (ft²)	MIN CFM PER AREA (CFM/ft²)	MIN CFM BY AREA (CFM)	NUM. OF PEOPLE	CFM PER PERSON	MIN CFM BY OCCUPANT (CFM)	REQ'D VENTILATION AIRFLOW (MAX OF I OR L) (CFM)	COMPLIES?	PERCENTAGE BASED DESIGN PRIMARY COOLING AIR (50% DDC,30% NON-DDC) (CFM)	MAXIMUM REHEAT CFM (MAX OF M OR O)	COMPLIES?	PERCENTAGE BASED DESIGN PRIMARY COOLING AIR (20% DDC, N/A NON-DDC) (CFM)	MAXIMUM DEADBAND AIRFLOW (larger of M or R, N/A for NON-DDC) (CFM)	COMPLIES?
VAV 1-1		425		DDC		881	0.15	132	18	15	264	264	Y	N/A	N/A	N/A	N/A	N/A	N/A
VAV 1-2		90		DDC		218	0.15	33	6	15	90	90	Y	N/A	N/A	N/A	N/A	N/A	N/A
VAV 1-3		150		DDC		195	0.15	29	10	15	150	150	Y	N/A	N/A	N/A	N/A	N/A	N/A
VAV 1-4		75		DDC		196	0.15	29	5	15	75	75	Y	N/A	N/A	N/A	N/A	N/A	N/A
VAV 1-5		1,095		DDC		6,418	0.15	963	73	15	1,095	1,095	Y	N/A	N/A	N/A	N/A	N/A	N/A
VAV 1-6		150		DDC		307	0.15	46	10	15	150	150	Y	N/A	N/A	N/A	N/A	N/A	N/A
VAV 1-7		435		DDC		597	0.15	90	17	15	255	255	Y	N/A	N/A	N/A	N/A	N/A	N/A
VAV 1-8		240		DDC		535	0.15	80	11	15	161.7	162	Y	N/A	N/A	N/A	N/A	N/A	N/A
VAV 1-9		90		DDC		94	0.15	14	6	15	90	90	Y	N/A	N/A	N/A	N/A	N/A	N/A
VAV 2-1		45		DDC		123	0.15	18	3	15	45	45	Y	N/A	N/A	N/A	N/A	N/A	N/A
VAV 2-2		135		DDC		214	0.15	32	9	15	135	135	Y	N/A	N/A	N/A	N/A	N/A	N/A
VAV 2-3		175		DDC		548	0.15	82	11	15	161.4	161	Y	N/A	N/A	N/A	N/A	N/A	N/A
VAV 2-4		345		DDC		716	0.15	107	23	15	345	345	Y	N/A	N/A	N/A	N/A	N/A	N/A
VAV 2-5		240		DDC		249	0.15	37	16	15	240	240	Y	N/A	N/A	N/A	N/A	N/A	N/A
VAV 2-6		300		DDC		506	0.15	76	20	15	300	300	Y	N/A	N/A	N/A	N/A	N/A	N/A
VAV 3-1		920		DDC		4,736	0.15	710	61	15	916.65	917	Y	N/A	N/A	N/A	N/A	N/A	N/A
VAV 3-2		90		DDC		120	0.15	18	6	15	90	90	Y	N/A	N/A	N/A	N/A	N/A	N/A
VAV 3-3		330		DDC		1,867	0.15	280	18	15	275.85	280	Y	N/A	N/A	N/A	N/A	N/A	N/A
VAV 3-4		270		DDC		1,644	0.15	247	18	15	270	270	Y	N/A	N/A	N/A	N/A	N/A	N/A
VAV 4-1		420		DDC		725	0.15	109	26	15	395.85	396	Y	N/A	N/A	N/A	N/A	N/A	N/A
VAV 4-2		105		DDC		122	0.15	18	7	15	105	105	Y	N/A	N/A	N/A	N/A	N/A	N/A
VAV 4-3		150		DDC		171	0.15	26	10	15	150	150	Y	N/A	N/A	N/A	N/A	N/A	N/A
VAV 4-4		165		DDC		459	0.15	69	11	15	165	165	Y	N/A	N/A	N/A	N/A	N/A	N/A
VAV 4-5		995		DDC		6,203	0.15	930	66	15	990	990	Y	N/A	N/A	N/A	N/A	N/A	N/A
VAV 5-1		1,080		DDC		1,612	0.15	242	72	15	1080	1,080	Y	N/A	N/A	N/A	N/A	N/A	N/A

Yellow shaded cells require user input. Remaining cells are protected and automatic.

- B The largest amount of primary air supplied by the terminal unit when it's operating in the cooling mode.
- C The smallest amount of primary air supplied by the terminal unit in the deadband mode.
- D The largest amount of primary air supplied by the terminal unit when it's operating in the heating mode.
- E A terminal unit can be controlled with DDC controls, or non-DDC controls. Each control category has different reheat limitations in code.
- F Transfer Air must be provided where Required Ventilation Airflow (Column M) is greater than the Design Primary Deadband Airflow (Column C).
- H Minimum ventilation rate per Section §120.1. Table 120.1-A.
- J Based on number of fixed seats where applicable or the greater of the expected number of occupants and 50% of the CBC occupant load for egress purposes for spaces without fixed seating.
- M Required Ventilation Airflow (Req'd Ventilation Airflow) is the larger of the ventilation rates calculated on an AREA BASIS or OCCUPANCY BASIS (Column I or L)
- N This column identifies whether or not the Design Primary Deadband Airflow complies or not. It compares the value in column M to the value in column C and column F.
- O Design Primary Cooling Airflow * 0.50 for DDC, Design Primary Cooling Airflow * 0.30 for Non-DDC. If the Design Primary Cooling Airflow is less than 300 cfm, then this is not applicable.
- P Maximum of Column M and Column O. If the Design Primary Cooling Airflow is 300 cfm or less, then this is not applicable.
- Q This column identifies whether or not the Design Primary Reheat Airflow at the zone level, complies or not. It compares the value in column P to the value in column D.
- R Design Primary Cooling Airflow * 0.20 for DDC. Not applicable for Non-DDC zones or zones where Design Primary Cooling Airflow is is 300 cfm or less.
- S Maximum of Column M and Column R. Not applicable if the Design Primary Cooling Airflow is 300 cfm or less.
- T This column identifies whether or not the Design Primary Deadband Airflow at the zone level, complies or not. It compares the value in column S to the value in column C.

STATE OF CALIFORNIA

HVAC SYSTEM REQUIREMENTS

CEC-NRCC-MCH-02-E (Revised 08/15) CALIFORNIA ENERGY COMMISSION

CERTIFICATE OF COMPLIANCE	NRCC-MCH-02-E
HVAC Wet System Requirements	(Page 3 of 3)
Project Name: ITD Headquarters	Date Prepared: 11/15/2016

DOCUMENTATION AUTHOR'S DECLARATION STATEMENT

1. I certify that this Certificate of Compliance documentation is accurate and complete.

Documentation Author Name: Eric CHang	Documentation Author Signature:
Company: Integral Group	Signature Date: 11/15/2016
Address: 427 13th St.	CEA/ HERS Certification Identification (if applicable):
City/State/Zip: Oakland, CA 94612	Phone: 510 663 2070

RESPONSIBLE PERSON'S DECLARATION STATEMENT

I certify the following under penalty of perjury, under the laws of the State of California:

1. The information provided on this Certificate of Compliance is true and correct.
2. I am eligible under Division 3 of the Business and Professions Code to accept responsibility for the building design or system design identified on this Certificate of Compliance (responsible designer).
3. The energy features and performance specifications, materials, components, and manufactured devices for the building design or system design identified on this Certificate of Compliance conform to the requirements of Title 24, Part 1 and Part 6 of the California Code of Regulations.
4. The building design features or system design features identified on this Certificate of Compliance are consistent with the information provided on other applicable compliance documents, worksheets, calculations, plans and specifications submitted to the enforcement agency for approval with this building permit application.
5. I will ensure that a completed signed copy of this Certificate of Compliance shall be made available with the building permit(s) issued for the building, and made available to the enforcement agency for all applicable inspections. I understand that a completed signed copy of this Certificate of Compliance is required to be included with the documentation the builder provides r at occupancy.

Responsible Designer Name: John McDonald	Responsible Designer Signature:
Company: Integral Group	Date Signed: 11/15/2016
Address: 427 13th St.	License: M30438
City/State/Zip: Oakland, CA 94612	Phone: 510 663 2070

STATE OF CALIFORNIA

MECHANICAL VENTILATION AND REHEAT

CEC-NRCC-MCH-03-E (Revised 05/15) CALIFORNIA ENERGY COMMISSION

CERTIFICATE OF COMPLIANCE	NRCC-MCH-03-E
Mechanical Ventilation & Reheat	(Page 2 of 2)
Project Name: ITD Headquarters	Date Prepared: 11/15/2016

DOCUMENTATION AUTHOR'S DECLARATION STATEMENT

1. I certify that this Certificate of Compliance documentation is accurate and complete.

Documentation Author Name: Eric Chang	Documentation Author Signature:
Company: Integral Group	Signature Date: 11/15/2016
Address: 427 13th St	CEA/ HERS Certification Identification (if applicable):
City/State/Zip: Oakland, CA 94612	Phone: 510 663 2070

RESPONSIBLE PERSON'S DECLARATION STATEMENT

I certify the following under penalty of perjury, under the laws of the State of California:

1. The information provided on this Certificate of Compliance is true and correct.
2. I am eligible under Division 3 of the Business and Professions Code to accept responsibility for the building design or system design identified on this Certificate of Compliance (responsible designer).
3. The energy features and performance specifications, materials, components, and manufactured devices for the building design or system design identified on this Certificate of Compliance conform to the requirements of Title 24, Part 1 and Part 6 of the California Code of Regulations.
4. The building design features or system design features identified on this Certificate of Compliance are consistent with the information provided on other applicable compliance documents, worksheets, calculations, plans and specifications submitted to the enforcement agency for approval with this building permit application.
5. I will ensure that a completed signed copy of this Certificate of Compliance shall be made available with the building permit(s) issued for the building, and made available to the enforcement agency for all applicable inspections. I understand that a completed signed copy of this Certificate of Compliance is required to be included with the documentation the builder provides to the building owner at occupancy.

Responsible Designer Name: John McDonald	Responsible Designer Signature:
Company: Integral Group	Date Signed: 11/15/2016
Address: 427 13th St	License: M30438
City/State/Zip: Oakland, CA 94612	Phone: 510 663 2070

STATE OF CALIFORNIA

WATER HEATING SYSTEM GENERAL INFORMATION

CEC-NRCC-PLB-01-E (Revised 08/15) CALIFORNIA ENERGY COMMISSION

CERTIFICATE OF COMPLIANCE	NRCC-PLB-01-E
Water Heating System General Information	(Page 1 of 2)
Project Name: ITD Headquarters	Date Prepared: 11/15/2016

A. GENERAL INFORMATION/SYSTEM INFORMATION		
01	Water Heater System Name:	Tankless Electric Water Heaters
02	Water Heater System Configuration:	Tankless Electric Water Heaters
03	Water Heater System Type:	Domestic Hot Water
04	Building Type:	Nonresidential
05	Total Number of Water Heaters in Systems:	7
06	Central DHW Distribution Type:	N/A
07	Dwelling Unit DHW Distribution Type:	N/A

B. WATER HEATER INFORMATION

Each water heater type requires a separate form.

01	Water Heater Type:	Tankless Electric Water Heater
02	Fuel Type:	Electricity
03	Manufacture Name:	Hubbell
04	Model Number:	TX
05	Number of Identical Water Heaters:	7
06	Installed Water Heater System Efficiency:	98%
07	Required Minimum Efficiency:	93%
08	Standby Loss Percent or Standby Loss Total:	< 3 Watts
09	Rated Input:	
10	Pilot Energy:	
11	Water Heater Tank Storage Volume:	
12	Exterior Insulation on Water Heater:	
13	Volume of Supplemental Storage:	
14	Internal Insulation on Supplemental Storage:	
15	Exterior Insulation on Supplemental Storage:	

C. PLUMBING COMPLIANCE FORMS & WORKSHEETS

(check box if worksheet is included)

For detailed instructions on the use of this and all Energy Efficiency Standards compliance forms, refer to the 2013 Nonresidential Manual

Note: The Enforcement Agency may require all forms to be incorporated onto the building plans.

YES	NO	Form/Worksheet #	Title
◉	○	NRCC-PLB-01-E	Certificate of Compliance, Declaration. Required on plans for all submittals.
○	○	NRCI-PLB-01-E	Certificate of Installation. Required on plans for all submittals.
○	○	NRCI-PLB-02-E	Certificate of Installation, required on central systems in high-rise residential, hotel/motel application.
○	○	NRCI-PLB-03-E	Certificate of Installation, required on single dwelling unit systems in high-rise residential, hotel/motel application.
○	○	NRCI-PLB-21-H	Certificate of Installation, required on HERS verified central systems in high-rise residential, hotel/motel application.
○	○	NRCI-PLB-22-H	Certificate of Installation, required on HERS verified single dwelling unit systems in high-rise residential, hotel/motel application.
○	○	NRCI-STH-01-E	Certificate of Installation, required on any solar water heating

STATE OF CALIFORNIA

WATER HEATING SYSTEM GENERAL INFORMATION

CEC-NRCC-PLB-01-E (Revised 08/15) CALIFORNIA ENERGY COMMISSION

CERTIFICATE OF COMPLIANCE	NRCC-PLB-01-E
Water Heating System General Information	(Page 2 of 2)
Project Name: ITD Headquarters	Date Prepared: 11/15/2016

DOCUMENTATION AUTHOR'S DECLARATION STATEMENT

1. I certify that this Certificate of Compliance documentation is accurate and complete.

Documentation Author Name: Eric Chang	Documentation Author Signature:
Company: Integral Group	Signature Date: 11/15/2016
Address: 427 13th St.	CEA/ HERS Certification Identification (if applicable):
City/State/Zip: Oakland, CA 94612	Phone: 510 663 2070

RESPONSIBLE PERSON'S DECLARATION STATEMENT

I certify the following under penalty of perjury, under the laws of the State of California:

1. The information provided on this Certificate of Compliance is true and correct.
2. I am eligible under Division 3 of the Business and Professions Code to accept responsibility for the building design or system design identified on this Certificate of Compliance (responsible designer).
3. The energy features and performance specifications, materials, components, and manufactured devices for the building design or system design identified on this Certificate of Compliance conform to the requirements of Title 24, Part 1 and Part 6 of the California Code of Regulations.
4. The building design features or system design features identified on this Certificate of Compliance are consistent with the information provided on other applicable compliance documents, worksheets, calculations, plans and specifications submitted to the enforcement agency for approval with this building permit application.
5. I will ensure that a completed signed copy of this Certificate of Compliance shall be made available with the building permit(s) issued for the building, and made available to the enforcement agency for all applicable inspections. I understand that a completed signed copy of this Certificate of Compliance is required to be included with the documentation the builder provides to the building owner at occupancy.

Responsible Designer Name: Jennifer Ma	Responsible Designer Signature:
Company: Integral Group	Date Signed: 11/15/2016
Address: 427 13th St.	License: M37560
City/State/Zip: Oakland, CA 94612	Phone: 510 663 2070

KOMOROUS-TOWEY ARCHITECTS
410 TWELFTH STREET, SUITE 300
OAKLAND, CA 94612
Ph: 510.446.2244 Fx: 510.446.2242
kta@ktarch.com www.ktarch.com

INTEGRAL GROUP
427 13th Street
Oakland, CA 94612
510 663-2070
510 663-2080 fax
www.integralgroup.com

REGISTERED PROFESSIONAL ENGINEER
JOHN P. McDONALD
No. M 30438
Exp. 12-31-17
MECHANICAL
STATE OF CALIFORNIA

MECHANICAL T-24

ITD HEADQUARTERS

393 13TH STREET
OAKLAND, CA 94612

BID SET

REVISIONS

No	Desc	Date
1	65% CD Set	2016-08-01
2	95% CD Set	2016-10-31
3	Bid Set	2016-11-15

© COPYRIGHT 2016

DATE: 03/31/2017

DRAWN BY: JM, EC

PROJECT NO.: 1203.22

M82

15XX 13th Street
3/28/2017 4:09:08 PM
C:\Users\apazcoguin\Documents\IG - MEP - 13th Street - 16_apazcoguin.rvt

SECTION A5.602
NONRESIDENTIAL OCCUPANCIES APPLICATION CHECKLISTS—continued[4]

APPLICATION CHECKLIST FOR BSC	MANDATORY	PLAN SHEET REFERENCE	VOLUNTARY[1] CALGreen Tier 1	VOLUNTARY[1] CALGreen Tier 2
Energy Efficient Steel Framing				
A5.213.1 Steel framing. Design for and employ techniques to avoid thermal bridging.			☐	☐
Water Efficiency and Conservation				
Indoor Water Use				
5.303.1 Meters. Separate meters shall be installed for the uses described in Sections 5.303.1.1 and 5.303.1.2.				
5.303.1.1 New buildings or additions in excess of 50,000 square feet. Separate submeters shall be installed as follows:	☒			
1. For each individual leased, rented or other tenant space within the building projected to consume more than 100 gal/day, including, but not limited to, spaces used for laundry or cleaners, restaurant or food service, medical or dental office, laboratory, or beauty salon or barber shop.	☒			
2. Where separate submeters for individual building tenants are unfeasible, for water supplied to the following subsystems:				
a. Makeup water for cooling towers where flow through is greater than 500 gpm (30 L/s)	☒			
b. Makeup water for evaporative coolers greater than 6 gpm (0.04 L/s)	☒			
c. Steam and hot-water boilers with energy input more than 500,000 Btu/h (147 kW)	☒			
5.303.1.2 Excess consumption. A separate submeter or metering device shall be provided for any tenant within a new building or an addition that is projected to consume more than 1,000 gal/day (3800 L/day).	☒	N/A		
A5.303.2.3.1 Tier 1 – 12-percent savings. A schedule of plumbing fixtures and fixture fittings that will reduce the overall use of potable water within the building by 12 percent shall be provided.			☒	
A5.303.2.3.2 Tier 2 – 20-percent savings. A schedule of plumbing fixtures and fixture fittings that will reduce the overall use of potable water within the building by 20 percent shall be provided.				☒
A5.303.2.3.3 25-percent savings. A schedule of plumbing fixtures and fixture fittings that will reduce the overall use of potable water within the building by 25 percent shall be provided. (Calculate savings by Water Use Worksheets)				☒
A5.303.2.3.4 Nonpotable water systems for indoor use. Utilizing nonpotable water systems (such as captured rainwater, treated graywater, and recycled water) intended to supply water closets, urinals, and other allowed uses, may be used in the calculations demonstrating the 12-, 20- or 25-percent reduction. The nonpotable water systems shall comply with the current edition of the *California Plumbing Code*.		N/A	☐	
5.303.3 Water conserving plumbing fixtures and fittings. Plumbing fixtures (water closets and urinals) and fittings (faucets and showerheads) shall comply with the following:	☒			
5.303.3.1 Water closets. The effective flush volume of all water closets shall not exceed 1.28 gallons per flush. Tank-type water closets shall be certified to the performance criteria of the U.S. EPA WaterSense Specification for Tank-Type Toilets.	☒			
Note: The effective flush volume of dual flush toilets is defined as the composite, average flush volume of two reduced flushes and one full flush.	☒	P02		
5.303.3.2 Urinals. The effective flush volume of urinals shall not exceed 0.5 gallons per flush.	☒	P02		
5.303.3.3 Showerheads.	☒	P02		
5.303.3.3.1 Single showerhead. Showerheads shall have a maximum flow rate of not more than 2.0 gallons per minute at 80 psi. Showerheads shall be certified to the performance criteria of the U.S. EPA WaterSense Specification for Showerheads.				
5.303.3.3.2 Multiple showerheads serving one shower. When a shower is served by more than one showerhead, the combined flow rate of all showerheads and/or other shower outlets controlled by a single valve shall not exceed 2.0 gallons per minute at 80 psi, or the shower shall be designed to allow only one shower outlet to be in operation at a time.	☒	N/A		
Note: A hand-held shower shall be considered a showerhead.				
A5.303.3 Appliances and fixture commercial application. Appliances and fixtures shall meet the following:				
1. Clothes washers shall have a maximum Water Factor (WF) that will reduce the use of water by 10 percent below the California Energy Commissions' WF standards for commercial clothes washers located in Title 20 of the *California Code of Regulations*.			☐	☐
2. Dishwashers shall meet the criteria in Section A5.303.3(2)(a) and (b).			☐	☐
3. Ice makers shall be air cooled.			☐	☐
4. Food steamers shall be connectionless or boilerless.			☐	☐
5. [BSC] The use and installation of water softeners that discharge to the community sewer system may be limited or prohibited by local agencies if certain conditions are met.			☐	☐
6. Combination ovens shall not consume more than 10 gph (38 L/h) in the full operational mode.			☐	☐
7. Commercial pre-rinse spray valves manufactured on or after January 1, 2006 shall function at equal to or less than 1.6 gpm (0.10 L/s) at 60 psi (414 kPa) and			☐	☐
a. Be capable of cleaning 60 plates in an average time of not more than 30 seconds per plate				
b. Be equipped with an integral automatic shutoff				
c. Operate at static pressure of at least 30 psi (207 kPa) when designed for a flow rate of 1.3 gpm (0.08 L/s) or less				

SECTION A5.602
NONRESIDENTIAL OCCUPANCIES APPLICATION CHECKLISTS—continued[4]

APPLICATION CHECKLIST FOR BSC	MANDATORY	PLAN SHEET REFERENCE	VOLUNTARY[1] CALGreen Tier 1	VOLUNTARY[1] CALGreen Tier 2
5.106.8 Light pollution reduction. [N] Outdoor lighting systems shall be designed and installed to comply with the following:	☒			
1. The minimum requirements in the *California Energy Code* for Lighting Zones 1–4 as defined in Chapter 10 of the *California Administrative Code*; and		E04		
2. Backlight, Uplight and Glare (BUG) ratings as defined in IESNA TM-15-11; and				
3. Allowable BUG ratings not exceeding those shown in Table 5.106.8, or	or			
Comply with a local ordinance lawfully enacted pursuant to Section 101.7, whichever is more stringent.	☒			
Exceptions: [N]				
1. Luminaires that qualify as exceptions in Section 140.7 of the *California Energy Code*				
2. Emergency lighting				
Note: [N] See also *California Building Code*, Chapter 12, Section 1205.6 for college campus lighting requirements for parking facilities and walkways.				
5.106.10 Grading and paving. Construction plans shall indicate how site grading or a drainage system will manage all surface water flows to keep water from entering buildings. Examples of methods to manage surface water include those shown in Items 1–5. Sec exception for additions or alterations.	☒			
A5.106.11 Heat island effect. Reduce nonroof heat islands and roof heat islands as follows:				
A5.106.11.1 Hardscape alternatives. Use one or a combination of strategies 1 through 2 for 50 percent of site hardscape or put 50 percent of parking underground.			☐	☐
1. Use light colored materials with an initial solar reflectance value of at least .30 as determined in accordance with ASTM Standards E 1918 or C 1549.			☐	☐
2. Use open-grid pavement system or pervious or permeable pavement system.			☐	☐
A5.106.11.2 Cool roof for reduction of heat island effect. Use roofing materials having a minimum aged solar reflectance, thermal emittance complying with Sections A5.106.11.2.2 and A5.106.11.2.3 or a minimum aged or Solar Reflectance Index (SRI)3 equal to or greater than the values shown in:				
Table A5.106.11.2.2 – Tier 1 or			☐	
Table A5.106.11.2.3 – Tier 2				☐
Exceptions:				
1. Roof constructions that have a thermal mass over the roof membrane, including areas of vegetated (green) roofs, weighing at least 25 lb/sf.				
2. Roof area covered by building integrated solar photovoltaic and building integrated solar thermal panels.				

SECTION A5.602
NONRESIDENTIAL OCCUPANCIES APPLICATION CHECKLISTS[4]
July 1, 2015 SUPPLEMENT
Effective July 1, 2015

APPLICATION CHECKLIST FOR BSC	MANDATORY	VOLUNTARY[1] CALGreen Tier 1	VOLUNTARY[1] CALGreen Tier 2
Requirements			
Project meets all of the requirements of Divisions 5.1 through 5.5.	☒	☐	☐
Planning and Design			
Site Selection			
A5.103.1 Community connectivity. Locate project on a previously developed site within a ½-mile radius of at least ten basic services, listed in Section A5.103.1.		☒	☐
A5.103.2 Brownfield or greyfield site redevelopment or infill area development. Select for development a brownfield in accordance with Section A5.103.2.1 or on a greyfield or infill site as defined in Section A5.106.3.2		☐	☐
A5.103.2.1 Brownfield redevelopment. Develop a site documented as contaminated and fully remediated or on a site defined as a brownfield.			
Site Preservation			
A5.104.1.1 Local zoning requirement in place. Exceed the zoning's open space requirement for vegetated open space on the site by 25 percent.		☐	☐
A5.104.1.2 No local zoning requirement in place. Provide vegetated open space area adjacent to the building equal to the building footprint area.		☐	☐
A5.104.1.3 No open space required in zoning ordinance. Provide vegetated open space equal to 20 percent of the total project site area.		☐	☐
Deconstruction and Reuse of Existing Structures			
A5.105.1.1 Existing building structure. Maintain at least 75 percent of existing building structure (including structural floor and roof decking) and envelope (exterior skin and framing) based on surface area.		☒	☐
Exceptions:			
1. Window assemblies and nonstructural roofing material.			
2. Hazardous materials that are remediated as a part of the project.			
3. A project with an addition of more than two times the square footage of the existing building.			
A5.105.1.2 Existing nonstructural elements. Reuse existing interior nonstructural elements (interior walls, doors, floor coverings and ceiling systems) in at least 50 percent of the area of the completed building (including additions).		☐	☐
Exception: A project with an addition of more than two times the square footage of the existing building.			
A5.105.1.3 Salvage. Salvage additional items in good condition such as light fixtures, plumbing fixtures and doors for reuse on this project in an onsite storage area or for salvage in dedicated collection bins. Document the weight or number of the items salvaged.		☐	☐
Site Development			
5.106.1 Storm water pollution prevention. Newly constructed projects and additions which disturb less than one acre of land shall prevent the pollution of stormwater runoff from the construction activities through local ordinance in Section 5.106.1.1	☒		
or	OR		
Best management practices (BMP) in Section 5.106.1.2.	☒		
A5.106.2 Storm water design. Design storm water runoff rate and quantity in conformance with Section A5.106.2.1 and storm water runoff quality by Section A5.106.2.2 or by local requirements, whichever are stricter.		☐	☐
A5.106.2.1 Storm water runoff rate and quantity. Implement a storm water management plan resulting in no net increase in rate and quantity of storm water runoff from existing to developed conditions.		☐	☐
Exception: If the site is already greater than 50 percent impervious, implement a storm water management plan resulting in a 25-percent decrease in rate and quantity.			
A5.106.2.2 Storm water runoff quality. Use post construction treatment control best management practices (BMPs) to mitigate (infiltrate, filter or treat) storm water runoff from the 85th percentile 24-hour runoff event (for volume-based BMPs) or the runoff produced by a rain event equal to two times the 85th percentile hourly intensity (for flow-based BMPs).		☐	☐
A5.106.3 Low impact development (LID). Reduce peak runoff in compliance with Section 5.106.1. Employ at least two of the following methods or other best management practices to allow rainwater to soak into the ground, evaporate into the air or collect in storage receptacles for irrigation or other beneficial uses. LID strategies include, but are not limited to those listed in Section A5.106.3.		☐	☐

SECTION A5.602
NONRESIDENTIAL OCCUPANCIES APPLICATION CHECKLISTS—continued[4]

APPLICATION CHECKLIST FOR BSC	MANDATORY	PLAN SHEET REFERENCE	VOLUNTARY[1] CALGreen Tier 1	VOLUNTARY[1] CALGreen Tier 2
5.303.3.4 Faucets and Fountains				
5.303.3.4.1 Nonresidential Lavatory faucets. Lavatory faucets shall have a maximum flow rate of not more than 0.5 gallons per minute at 60 psi.	☒	P02		
5.303.3.4.2 Kitchen faucets. Kitchen faucets shall have a maximum flow rate of not more than 1.8 gallons per minute at 60 psi. Kitchen faucets may temporarily increase the flow above the maximum rate, but not to exceed 2.2 gallons per minute at 60 psi, and must default to a maximum flow rate of 1.8 gallons per minute at 60 psi.	☒	P02		
5.303.3.4.3 Wash fountains. Wash fountains shall have a maximum flow rate of not more than 1.8 gallons per minute/20 [rim space (inches) at 60 psi].	☒	N/A		
5.303.3.4.4 Metering faucets. Metering faucets shall not deliver more than 0.20 gallons per cycle.	☒	N/A		
5.303.3.4.5 Metering faucets for wash fountains. Metering faucets for wash fountains shall have a maximum flow rate of not more than 0.20 gallons per minute/20 [rim space (inches) at 60 psi].	☒	N/A		
Note: Where complying faucets are unavailable, aerators or other means may be used to achieve reduction.				
5.303.4 Areas of additions or alteration. For those occupancies within the authority of the California Building Standards Commission as specified in Section 103, the provisions of Section 5.303.3 shall apply to new fixtures in additions or areas of alterations to the building.	☒			
A5.303.5 Dual plumbing. New buildings and facilities shall be dual plumbed for potable and recycled water systems for toilet flushing when recycled water is available as determined by the enforcement authority.		N/A	☐	☐
5.303.6 Standards for plumbing fixtures and fittings. Plumbing fixtures and fittings shall be installed in accordance with the *California Plumbing Code*, and shall meet the applicable standards referenced in Table 1401.1 of the *California Plumbing Code* and in Chapter 6 of this code.	As applicable ☒	P01		
Outdoor Water Use				
5.304.1 Water budget. A water budget shall be developed for landscape irrigation use.[1] Applies to additions or alterations.	☒			
5.304.2 Outdoor potable water use. For new water service, separate meters or submeters shall be installed for indoor and outdoor potable water use for landscaped areas of at least 1,000 square feet but not more than 5,000 square feet, separate submeters shall be installed for outdoor potable water use. Applies to additions or alterations.	☒			
A5.304.2.1 Outdoor potable water use. For new water service not subject to the provisions of *Water Code* Section 535, separate meters or submeters shall be installed for outdoor potable water use for landscaped areas of at least 500 square feet but not more than 1,000 square feet (the level at which Section 5.304.2 applies).			☐	☐
5.304.3 Irrigation design. In new nonresidential projects with at least 1,000 square feet but not more than 2,500 square feet of landscaped area (the level at which the MLO applies), install irrigation controllers and sensors which include the following criteria and meet manufacturer's recommendations. Applies to additions or alterations.	☒			
5.304.3.1 Irrigation controllers. Automatic irrigation system controllers installed at the time of final inspection shall comply with the following:				
1. Controllers shall be weather- or soil moisture-based controllers that automatically adjust irrigation in response to changes in plants' needs as weather conditions change.	As applicable ☒			
2. Weather-based controllers without integral rain sensors or communication systems that account for local rainfall shall have a separate wired or wireless rain sensor which connects or communicates with the controller(s). Soil moisture-based controllers are not required to have rain sensor input.				
A5.304.4 Potable water reduction. Provide water-efficient landscape irrigation design that reduces the use of potable water beyond the initial requirements for plant installation and establishment in accordance with Section A5.304.4.1 or A5.304.4.2. Calculations for the reduction shall be based on the water budget developed pursuant to Section 5.304.1.				
A5.304.4.1 Tier 1 – Reduce the use of potable water to a quantity that does not exceed 60 percent of ETo times the landscape area.			☒	
A5.304.4.2 Tier 2 –Reduce the use of potable water to a quantity that does not exceed 55 percent of ETo times the landscape area.				☒
Note: Methods used to accomplish the requirements of this section shall include, but not be limited to, the items listed in A5.304.4.				
A5.304.4.3 Verification of compliance. A calculation demonstrating the applicable potable water use reduction required by this section shall be provided.			☒	☒
A5.304.5 Potable water elimination. Provide a water efficient landscape irrigation design that eliminates the use of potable water beyond the initial requirements for plant installation and establishment. Methods used to accomplish the requirements of this section shall include, but not be limited to, the items listed in Section A5.304.5.			☐	☐

SECTION A5.602
NONRESIDENTIAL OCCUPANCIES APPLICATION CHECKLISTS—continued[4]

APPLICATION CHECKLIST FOR BSC	MANDATORY	PLAN SHEET REFERENCE	VOLUNTARY[1] CALGreen Tier 1	VOLUNTARY[1] CALGreen Tier 2
Energy Efficiency				
Performance Requirements				
5.201.1 Scope. Building meets or exceeds the requirements of the California Building Energy Efficiency Standards.3	☒	M02, M03, M81, M82	☒ [2]	☒ [2]
A5.203.1 Energy efficiency. Nonresidential, high-rise residential and hotel/motel buildings that include lighting and/or mechanical systems shall comply with Sections A5.203.1.1 and either A5.203.1.2.1 or A5.203.1.2.2. Newly constructed buildings, as well as additions and alterations, are included in the scope of these sections. Buildings permitted without lighting or mechanical systems shall comply with Section A5.203.1.1 but are not required to comply with Sections A5.203.1.1.2 or A5.203.1.2.		M02, M03, M81, M82	☐	☐
A5.203.1.1.1 Outdoor lighting. Newly installed outdoor lighting power is no greater than 90 percent of the Title 24, Part 6 calculated value of allowed outdoor lighting power.		E03	☒ [2]	☒ [2]
A5.203.1.1.2 Service water heating in restaurants. Newly constructed restaurants 8,000 square feet or greater and with service water heaters rated 75,000 Btu/h or greater installed a solar water-heating system with a minimum solar savings fraction of 0.15 or meet one of the exceptions.		N/A	☒ [2]	☒ [2]
A5.203.1.1.3 Functional areas where compliance with residential lighting standards is required. For newly constructed high-rise residential dwelling units and hotel and motel guest rooms, indoor lighting complies with the applicable requirements in Appendix A4 Residential Voluntary Measures, Division A4.2 – Energy Efficiency, Section A4.203.1.1.3. For additions and alterations to high-rise residential dwelling units and hotel and motel guest rooms, indoor lighting complies with the applicable requirements in Appendix A4 Residential Voluntary Measures, Division A4.2 – Energy Efficiency, Section A4.204.1.1.1.			☒ [2]	☒ [2]
A5.203.1.2.1 Tier 1. For building projects that include indoor lighting or mechanical systems, but not both, the Energy Budget is no greater than 95 percent of the Title 24, Part 6, Energy Budget for the Proposed Design Building. For building projects that include indoor lighting and mechanical systems, the Energy Budget is no greater than 90 percent of the Title 24, Part 6, Energy Budget for the Proposed Design Building.		N/A	☒ [2]	
A5.203.1.2.2 Tier 2. For building projects that include indoor lighting or mechanical systems, but not both, the Energy Budget is no greater than 90 percent of the Title 24, Part 6, Energy Budget for the Proposed Design Building. For building projects that include indoor lighting and mechanical systems, the Energy Budget is no greater than 85 percent of the Title 24, Part 6, Energy Budget for the Proposed Design Building.		N/A		☒ [2]
A5.211.3 Green power. Participate in the local utility's renewable energy portfolio program that provides a minimum of 50-percent electrical power from renewable sources. Maintain documentation through utility billings.				
Renewable Energy				
A5.211.1 On-site renewable energy. Use on-site renewable energy for at least 1 percent of the electrical service overcurrent protection device rating calculated in accordance with the 2013 *California Electrical Code* or **1KW**, whichever is greater, in addition to the electrical demand required to meet 1 percent of natural gas and propane use calculated in accordance with the 2013 *California Plumbing Code*.			☐	☐
A5.211.1.1 Documentation. Calculate renewable on-site system to meet the requirements of Section A5.211.1. Factor in net-metering, if offered by local utility, on an annual basis.			☐	☐
Elevators, Escalators and Other Equipment				
A5.212.1 Elevators and escalators. In buildings with more than one elevator or two escalators, provide systems and controls to reduce the energy demand of elevators and escalators as follows. Document systems operation and controls in the project specifications and commissioning plan.			☐	☐
A5.212.1.1 Elevators. Traction elevators shall have a regenerative drive system that feeds electrical power back into the building grid when the elevator is in motion.			☒	☐
A5.212.1.1.1 Car lights and fan. A parked elevator shall turn off its car lights and fan automatically until the elevator is called for use.			☐	☐
A5.212.1.2 Escalators. An escalator shall have a variable voltage variable frequency (VVVF) motor drive system that is fully regenerative when the escalator is in motion.			☐	☐
A5.212.1.4 Controls. Controls that reduce energy demand shall meet requirements of CCR, Title 8, Chapter 4, Subchapter 6 and shall not interrupt emergency operations for elevators required in CCR, Title 24, Part 2, *California Building Code*.				

SECTION A5.602
NONRESIDENTIAL OCCUPANCIES APPLICATION CHECKLISTS—continued[4]

APPLICATION CHECKLIST FOR BSC	MANDATORY	PLAN SHEET REFERENCE	VOLUNTARY[1] CALGreen Tier 1	VOLUNTARY[1] CALGreen Tier 2
5.106.4 Bicycle parking. For buildings within the authority of California Building Standards Commission as specified in Section 103, comply with Section 5.106.4.1. For buildings within the authority of the Division of the State Architect pursuant to Section 105, comply with Section 5.106.4.2.	☒	A2.2		
5.106.4.1 Bicycle parking. [BSC] Comply with Sections 5.106.4.1.1 and 5.106.4.1.2; or meet the applicable local ordinance, whichever is stricter.				
5.106.4.1.1 Short-term bicycle parking. [BSC] If the new project or addition or alteration is anticipated to generate visitor traffic, provide permanently anchored bicycle racks within 200 feet of the visitors' entrance, readily visible to passers-by, for 5 percent of new visitor motorized vehicle parking spaces being added, with a minimum of one two-bike capacity rack.	☒			
Exception: Additions or alterations which add nine or fewer visitor vehicular parking spaces.				
5.106.4.1.2 Long-term bicycle parking. For buildings with over 10 tenant-occupants or for additions or alterations that add 10 or more tenant vehicular parking spaces, provide secure bicycle parking for 5 percent of tenant-occupied motorized vehicle parking spaces being added, with a minimum of one space. Acceptable parking facilities shall be convenient from the street and shall meet one of the following:	☒			
1. Covered, lockable enclosures with permanently anchored racks for bicycles;				
2. Lockable bicycle rooms with permanently anchored racks; or				
3. Lockable, permanently anchored bicycle lockers.				
Note: Additional information on recommended bicycle accommodations may be obtained from Sacramento Area Bicycle Advocates.				
A5.106.4.3 Changing rooms. For buildings with over 10 tenant-occupants, provide changing/shower facilities in accordance with Table A5.106.4.3 or document arrangements with nearby changing/shower facilities.		A2.2	☒	☐
A5.106.5.1 Designated parking for fuel-efficient vehicles. Provide designated parking for any combination of low-emitting, fuel-efficient and carpool/van pool vehicles as shown in:		N/A		
A5.106.5.1.1. Tier 1 10% of total spaces per Table A5.106.5.1.1.			☐	
A5.106.5.1.2. Tier 2 12% of total spaces per Table A5.106.5.1.2.				☐
5.106.5.2 Designated parking. In new projects or additions or alterations that add 10 or more vehicular parking spaces, provide designated parking for any combination of low-emitting, fuel-efficient and carpool/van pool vehicles as shown in Table 5.106.5.2.	☒			
5.106.5.2.1 Parking stall marking. Paint, in the paint used for stall striping, the following characters such that the lower edge of the last word aligns with the end of the stall striping and is visible beneath a parked vehicle:	☒			
CLEAN AIR/ VANPOOL/EV				
Note: Vehicles bearing Clean Air Vehicle stickers from expired HOV lane programs may be considered eligible for designated parking spaces.				
5.106.5.3 Electric vehicle (EV) charging. [N] Construction shall comply with Section 5.106.5.3.1 or Section 5.106.5.3.2 to facilitate future installation of electric vehicle supply equipment (EVSE).	☒	N/A		
5.106.5.3.1 Single charging space requirements. [N]				
5.106.5.3.2 Multiple charging spaces requirements. [N]	☒			
5.106.5.3.3 EV charging space calculation. [N] per Table 5.106.5.3.3 (approx. 3%)	☒			
5.106.5.3.4 [N] Identification.	☒			
5.106.5.3.5 [N] EV spaces count as designated parking.	☒			
A5.106.5.3.1 Tier 1. per Table A5.106.5.3.1 (approx. 4%)			☐	
A5.106.5.3.2 Tier 2. per Table A5.106.5.3.2 (approx. 6%)				☐
A5.106.6 Parking capacity. Design parking capacity to meet but not exceed minimum local zoning requirements.				
A5.106.6.1 Reduce parking capacity. With the approval of the enforcement authority, employ strategies to reduce on-site parking area by				
1. Use of on street parking or compact spaces, illustrated on the site plan or			☐	☐
2. Implementation and documentation of programs that encourage occupants to carpool, ride share or use alternate transportation.			☐	☐
A5.106.7 Exterior walls. Meet requirements in the current edition of the *California Energy Code* and comply with either Section A5.106.7.1 or A5.106.7.2 for wall surfaces:			☐	☐
A5.106.7.1 Fenestration. Provide vegetative or man-made shading devices for all fenestration on east-, south- and west-facing walls.			☐	☐
A5.106.7.1.1 East and west walls. Shading devices shall have 30% coverage to a height of 20 feet or to the top of the exterior wall, whichever is less.			☐	☐
A5.106.7.1.2 South walls. Shading devices shall have 60% coverage to a height of 20 feet or to the top of the exterior wall, whichever is less.			☐	☐
A5.106.7.2 Opaque wall areas. Use wall surfacing with SRI 25 (aged), for 75% of opaque wall areas.			☐	☐

KOMOROUS-TOWEY ARCHITECTS
410 TWELFTH STREET, SUITE 300
OAKLAND, CA 94612
Ph: 510.446.2244 Fx: 510.446.2242
ktc@ktarch.com www.ktarch.com

INTEGRAL GROUP
427 13th Street
Oakland, CA 94612
510 663-2070
510 663-2080 fax
www.integralgroup.com

REGISTERED PROFESSIONAL ENGINEER
JOHN P. McDONALD
No. M 30438
Exp. 12-31-17
MECHANICAL
STATE OF CALIFORNIA

CALGREEN CHECKLIST

ITD HEADQUARTERS

393 13TH STREET
OAKLAND, CA 94612

BID SET

REVISIONS

No	Desc	Date

© COPYRIGHT 2016

DATE: 03/31/2017

DRAWN BY: JM, EC

PROJECT NO.: 1203.22

M83

1500 13th Street
3/28/2017 4:08:11 PM
C:\Users\spazzoguin\Documents\IG - MEP - 13th Street - r16_spazzoguin.rvt

SECTION A5.602
NONRESIDENTIAL OCCUPANCIES APPLICATION CHECKLISTS—continued[4]

APPLICATION CHECKLIST FOR BSC	MANDATORY	PLAN SHEET REFERENCE	VOLUNTARY[1] CALGreen Tier 1	VOLUNTARY[1] CALGreen Tier 2
5.504.4 Finish material pollutant control. Finish materials shall comply with Sections 5.504.4.1 through 5.504.4.6.				
5.504.4.1 Adhesives, sealants, caulks. Adhesives and sealants used on the project shall meet the requirements of the following standards.				
1. Adhesives, adhesive bonding primers, adhesive primers, sealants, sealant primers and caulks shall comply with local or regional air pollution control or air quality management district rules where applicable or SCAQMD Rule 1168 VOC limits, as shown in Tables 5.504.4.1 and 5.504.4.2.	☒			
2. Aerosol adhesives and smaller unit sizes of adhesives and sealant or caulking compounds (in units of product, less packaging, which do not weigh more than one pound and do not consist of more than 16 fluid ounces) shall comply with statewide VOC standards and other requirements, including prohibitions on use of certain toxic compounds, of *California Code of Regulations*, Title 17, commencing with Section 94507.	☒			
5.504.4.3 Paints and coatings. Architectural paints and coatings shall comply with Table 5.504.4.3 unless more stringent local limits apply.	☒			
5.504.4.3.1 Aerosol paints and coatings. Aerosol paints and coatings shall meet the Product- Weighted MIR Limits for ROC in Section 94522(a)(3) and other requirements, including prohibitions on use of certain toxic compounds and ozone depleting substances (CCR, Title 17, Section 94520, et seq.).	☒			
5.504.4.3.2 Verification. Verification of compliance with this section shall be provided at the request of the enforcing agency.	☒			
5.504.4.4 Carpet systems. All carpet installed in the building interior shall meet the testing and product requirements of one of the standards listed in Section 5.504.4.4.	☒			
5.504.4.4.1 Carpet cushion. All carpet cushion installed in the building interior shall meet the requirements of the Carpet and Rug Institute's Green Label program.	☒			
5.504.4.4.2 Carpet adhesive. All carpet adhesive shall meet the requirements of Table 5.504.4.1.	☒			
5.504.4.5 Composite wood products. Hardwood plywood, particleboard and medium density fiberboard composite wood products used on the interior or exterior of the building shall meet the requirements for formaldehyde as specified in Table 5.504.4.5.	☒			
A5.504.4.5.1 No added formaldehyde, Tier 1. Use composite wood products approved by the ARB as no-added formaldehyde (NAF) based resins or ultra-low emitting formaldehyde (ULEF) resins.			☒	
5.504.4.5.3 Documentation. Verification of compliance with this section shall be provided as requested by the enforcing agency. Documentation shall include at least one of the following:	☒			
1. Product certifications and specifications.	☒			
2. Chain of custody certifications.	As applicable			
3. Product labeled and invoiced as meeting the Composite Wood Products regulation (see CCR, Title 17, Section 93120, et seq.).	☒			
4. Exterior grade products marked as meeting the PS-1 or PS-2 standards of the Engineered Wood Association, the Australian AS/NZS 2269 or European 636 3S standards.	☒			
5. Other methods acceptable to the enforcing agency.	☒			
5.504.4.6 Resilient flooring systems. For 80 percent of floor area receiving resilient flooring, install resilient flooring which meets one of the following:	☒			
1. Certified under the Resilient Floor Covering Institute (RFCI) FloorScore program;				
2. Compliant with the VOC-emission limits and testing requirements specified in the California Department of Public Health's 2010 Standard Method for the Testing and Evaluation Chambers, Version 1.1, February 2010;				
3. Compliant with the Collaborative for High Performance Schools California (CA-CHPS) Criteria Interpretation for EQ 7.0 and 7.1 (formerly EQ. 2.2) dated July 2012 and listed in the CHPS High Performance Product Database; or				
4. Products certified under UL GREENGUARD Gold (formerly the Greenguard Children's & Schools Program).				
A5.504.4.6.1 Verification of compliance. Documentation shall be provided verifying that resilient flooring materials meet the pollutant emission limits.	☒			
5.504.4.7 Resilient flooring systems, Tier 1 [BSC]. For 90 percent of floor area receiving resilient flooring, install resilient flooring shall meet at least one of the following:			☒	
1. Certified under the Resilient Floor Covering Institute (RFCI) FloorScore program;				
2. Compliant with the VOC-emission limits and testing requirements specified in the California Department of Public Health's 2010 Standard Method for the Testing and Evaluation Chambers, Version 1.1, February 2010;				
3. Compliant with the Collaborative for High Performance Schools California (CA-CHPS) Criteria Interpretation for EQ 7.0 and 7.1 (formerly EQ. 2.2) dated July 2012 and listed in the CHPS High Performance Product Database; or				
4. Products certified under UL GREENGUARD Gold (formerly the Greenguard Children's & Schools Program).				

SECTION A5.602
NONRESIDENTIAL OCCUPANCIES APPLICATION CHECKLISTS—continued[4]

APPLICATION CHECKLIST FOR BSC	MANDATORY	PLAN SHEET REFERENCE	VOLUNTARY[1] CALGreen Tier 1	VOLUNTARY[1] CALGreen Tier 2
A5.408.3.1 Enhanced construction waste reduction–Tier 1 [BSC]. Divert to recycle or salvage at least 65% of nonhazardous construction and demolition waste generated at the site.			☒	
A5.408.3.1.1 Enhanced construction waste reduction–Tier 2 [BSC]. Divert to recycle or salvage at least 80% of nonhazardous construction waste generated at the site.				☐
A5.408.3.1.2 Verification of compliance. A copy of the completed waste management report or documentation of certification of the waste management company utilized shall be provided.			☒	☐
Exceptions:				
1. Excavated soil and land-clearing debris				
2. Alternate waste reduction methods developed by working with local agencies if diversion or recycle facilities capable of compliance with this item do not exist				
3. Demolition waste meeting local ordinance or calculated in consideration of local recycling facilities and markets.				
Life Cycle Assessment				
A5.409.1 General. Life cycle assessment shall be ISO 14044 compliant. The service life of the building and materials and systems shall not be less than 60 years.			☐	☐
A5.409.2 Whole building life cycle assessment. Conduct a whole building life assessment, including operating energy, showing that the building project achieves at least a 10-percent improvement for at least three of the impacts listed in Section A5.409.2.2, one of which shall be climate change, compared to a reference building.			☐	☐
A5.409.3 Materials and system assemblies. If whole building analysis of the project is not elected, select a minimum of 50% of materials or assemblies based on life cycle assessment of at least three for the impacts listed in Section A5.409.2.2, one of which shall be climate change.			☐	☐
A5.409.4 Substitution for prescriptive standards. Performance of a life cycle assessment completed in accordance with Section A5.409.2 may be substituted for other prescriptive provisions of Division A5.4, including those made mandatory through local adoption of Tier 1 or Tier 2 in Division A5.6.			☐	☐
A5.409.5 Verification of compliance. Documentation of compliance shall be provided as follows:				
1. The assessment is performed in accordance with ISO 14044.			☐	☐
2. The project meets the requirements of either parts of Title 24.			☐	☐
3. A copy of the analysis shall be made available to the enforcement authority.			☐	☐
4. A copy of the analysis and any maintenance or training recommendations shall be included in the operation and maintenance manual.			☐	☐
See notes for available tools.				
Building Maintenance and Operation				
5.410.1 Recycling by occupants. Provide readily accessible areas that serve the entire building and are identified for the depositing, storage and collection of nonhazardous materials for recycling.[3]				
5.410.1.1 Additions. [A] All additions conducted within a 12-month period under single or multiple permits, resulting in an increase of 30 percent or more in floor area, shall provide recycling areas on site.	☒			
Exception: Additions within a tenant space resulting in less than a 30-percent increase in the tenant space floor area.				
5.410.2 Commissioning. [N] For new buildings 10,000 square feet and over, building commissioning for all building systems covered by Title 24, Part 6, process systems and renewable energy systems shall be included in the design and construction processes of the building project. Commissioning requirements shall include items listed in Section 5.410.2.	☒			
Exceptions:				
1. Unconditioned warehouses of any size				
2. Areas less than 10,000 square feet used for offices or other conditioned accessory spaces within unconditioned warehouses		Spec 230800		
3. Tenant improvements less than 10,000 square feet as described in Section 303.1.1.				
4. Commissioning requirements for energy systems covered by the *California Energy Code*.				
5. Open parking garages of any size, or open parking garage areas of any size, within a structure.				
5.410.2.1 Owner's Project Requirements (OPR). [N] Documented before the design phase of the project begins the OPR shall include items listed in Section 5.410.2.1.	☒			
5.410.2.2 Basis of Design (BOD). [N] A written explanation of how the design of the building systems meets the OPR shall be completed at the design phase of the building project to cover the systems listed in Section 5.410.2.2.	☒	Spec 230800		
5.410.2.3 Commissioning plan. [N] A commissioning plan describing how the project will be commissioned shall include items listed in Section 5.410.2.3.	☒			
5.410.2.4 [N] Functional performance testing shall demonstrate the correct installation and operation of each component, system and system-to-system interface in accordance with the approved plans and specifications.	☒			
5.410.2.5 Documentation and training. [N] A Systems manual and systems operations training are required.				
5.410.2.5.1 Systems manual. [N] The systems manual shall be delivered to the building owner or representative and facilities operator and shall include the items listed in Section 5.410.2.5.1.	☒			
5.410.2.5.2 Systems operations training. [N] A program for training of the appropriate maintenance staff for each equipment type and/or system shall be developed and shall include items listed in Section 5.410.2.5.2.	☒			
5.410.2.6 Commissioning report. [N] A report of commissioning process activities undertaken through the design and construction phases of the building project shall be completed and provided to the owner or representative.	☒			

SECTION A5.602
NONRESIDENTIAL OCCUPANCIES APPLICATION CHECKLISTS—continued[4]

APPLICATION CHECKLIST FOR BSC	MANDATORY	PLAN SHEET REFERENCE	VOLUNTARY[1] CALGreen Tier 1	VOLUNTARY[1] CALGreen Tier 2
A5.304.6 Restoration of areas disturbed by construction. Restore all areas disturbed during construction by planting with local native and/or noninvasive vegetation.			☐	☐
A5.304.7 Previously developed sites. On previously developed or graded sites, restore or protect at least 50 percent of the site area with native and/or noninvasive vegetation.			☐	☐
A5.304.8 Graywater irrigation system. Install graywater collection system for onsite subsurface irrigation using graywater collected from bathtubs, showers, bathroom wash basins and laundry water. See *California Plumbing Code*.			☐	☐
Water Reuse				
A5.305.1 Nonpotable water systems. Nonpotable water systems for indoor and outdoor use shall comply with the current edition of the *California Plumbing Code*.		N/A	☐	☐
A5.305.2 Irrigation systems. Irrigation systems regulated by a local water efficient landscape ordinance or by the California Department of Water Resources Model Water Efficient Landscape Ordinance (MWELO) shall use recycled water.		N/A	☐	☐
Material Conservation and Resource Efficiency				
Efficient Framing Systems				
A5.404.1 Wood framing. Employ advanced wood framing techniques or OVE, as permitted by the enforcing agency.			☐	☐
Material Sources				
A5.405.1 Regional materials. Select building materials or products for permanent installation on the project that have been harvested or manufactured in California or within 500 miles of the project site, meeting the criteria listed in Section A5.405.1.			☐	☐
A5.405.2 Bio-based materials. Select bio-based building materials per Section A5.405.2.1 or A5.405.2.2.				
A5.405.2.1 Certified wood products. Certified wood is an important component of green building strategies and the California Building Standards Commission will continue to develop a standard through the next code cycle.			☒	☐
A5.405.2.2 Rapidly renewable materials. Use materials made from plants harvested within a ten-year cycle for at least 2.5 percent of total materials value, based on estimated cost.			☒	☐
A5.405.3 Reused materials. Use salvaged, refurbished, refinished or reused materials for at least 5 percent of the total value, based on estimated cost of materials on the project.			☐	☐
A5.405.4 Recycled content. Use materials, equivalent in performance to virgin materials, with a total (combined) recycled content value (RCV) of:				
Tier 1. The RCV shall not be less than 10 percent of the total material cost of the project.			☒	☐
Tier 2. The RCV shall not be less than 15 percent of the total material cost of the project.				
Note: Use the equations in the subsections for calculating total materials cost, recycled content, RCV of materials and assemblies, and total RCV.			☒	☐
A5.405.5 Cement and concrete. Use cement and concrete made with recycled products and complying with the following sections:				
A5.405.5.1 Cement. Cement shall comply with one of the following standards:			☐	☐
1. Portland cement shall meet ASTM C 150.				
2. Blended hydraulic cement shall meet ASTM C 595.				
3. Other Hydraulic Cements shall meet ASTM C 1157.				
A5.405.5.2 Concrete. Unless otherwise directed by the Engineer of Record, use concrete manufactured with cementitious materials in accordance with Sections A5.405.5.2.1 and A5.405.5.2.1.1, as approved by the enforcing agency.			☐	☐
A5.405.5.2.1 Supplementary cementitious materials (SCMs). Use concrete made with one or more of the SCMs listed in Section A5.405.5.2.1.			☐	☐
A5.405.5.2.1.1 Mix design equation. Use any combination of one or more SCMs, satisfying Equation A4.5-14.			☐	☐
Exception: Minimums in mix designs approved by the Engineer of Record may be lower where high early strength is needed.				
A5.405.5.3 Additional means of compliance. Any of the following measures shall be permitted to be employed for the production of cement or concrete, depending on their availability and suitability, in conjunction with Section A5.405.5.2.			☐	☐
A5.405.5.3.1 Cement. The following measures may be used in the manufacture of cement.				
A5.405.5.3.1.1 Alternative fuels. Where permitted by state or local air quality standards.			☐	☐
A5.405.5.3.1.2 Alternative power. Alternate electric power generated at the cement plant and/or green power purchased from the utility meeting the requirements of Section A5.211.			☐	☐

SECTION A5.602
NONRESIDENTIAL OCCUPANCIES APPLICATION CHECKLISTS—continued[4]

APPLICATION CHECKLIST FOR BSC	MANDATORY	PLAN SHEET REFERENCE	VOLUNTARY[1] CALGreen Tier 1	VOLUNTARY[1] CALGreen Tier 2
A5.405.5.3.2 Concrete. The following measures may be used in the manufacture of concrete.				
A5.405.5.3.2.1 Alternative energy. Renewable or alternative energy meeting the requirements of Section A5.211.			☐	☐
A5.405.5.3.2.2 Recycled aggregates. Concrete made with one or more of the materials listed in Section A5.405.5.3.2.2.			☐	☐
A5.405.5.3.2.3 Mixing water. Water recycled by the local water purveyor or water reclaimed from manufacturing processes and conforming to ASTM C 1602.			☐	☐
A5.405.5.3.2.4 High strength concrete. Concrete elements designed to reduce their total size compared to standard 3,000 psi concrete, as approved by the Engineer of Record.			☐	☐
Enhanced Durability and Reduced Maintenance				
A5.406.1.1 Service life. Select materials for longevity and minimal deterioration under conditions of use.			☐	☐
A5.406.1.2 Reduced maintenance. Select materials that require little, if any, finishing.			☐	☐
A5.406.1.3 Recyclability. Select materials that can be re-used or recycled at the end of their service life.			☐	☐
Weather Resistance and Moisture Management				
5.407.1 Weather protection. Provide a weather-resistant exterior wall and foundation envelope as required by *California Building Code*, Section 1403.2 and *California Energy Code*, Section 150, manufacturer's installation instructions or local ordinance, whichever is more stringent.[3]	☒			
5.407.2 Moisture control. Employ moisture control measures by the following methods;				
5.407.2.1 Sprinklers. Design and maintain landscape irrigation systems to prevent irrigation spray on structures.	☒			
5.407.2.2 Entries and openings. Design exterior entries and openings to prevent water intrusion into buildings as follows.	☒			
5.407.2.2.1 Exterior door protection. Primary exterior entries shall be covered to prevent water intrusion by using nonabsorbent floor and wall finishes within at least 2 feet around and perpendicular to such openings plus at least one of the following:				
1. An installed awning at least 4 feet in depth.				
2. The door is protected by a roof overhang at least 4 feet in depth.				
3. The door is recessed at least 4 feet.				
4. Other methods which provide equivalent protection.				
5.407.2.2.2 Flashing. Install flashings integrated with a drainage plane.	☒			
Construction Waste Reduction, Disposal and Recycling				
5.408.1 Construction waste management. Recycle and/or salvage for reuse a minimum of 50% of the non- hazardous construction waste in accordance with Section 5.408.1.1, 5.408.1.2 or 5.408.1.3; or meet a local construction and demolition waste management ordinance, whichever is more stringent.	☒ or			
5.408.1.1 Construction waste management plan. Where a local jurisdiction does not have a construction and demolition waste management ordinance that is more stringent, submit a construction waste management plan that complies with Items 1 through 4 of this section.	☒			
5.408.1.2 Waste management company. Utilize a waste management company that can provide verifiable documentation that the percentage of construction waste material diverted from the landfill complies with this section.	☒			
Exceptions to Sections 5.408.1.1 and 5.408.1.2:				
1. Excavated soil and land-clearing debris				
2. Alternate waste reduction methods developed by working with local agencies if diversion or recycle facilities capable of compliance with this item do not exist.				
3. Demolition waste meeting local ordinance or calculated in consideration of local recycling facilities and markets				
5.408.1.4 Documentation. Provide documentation of the waste management plan that meets the requirements listed in Sections 5.408.1.1 through 5.408.1.3, and the plan is accessible to the enforcement authority.	☒			
5.408.1.5 Waste stream reduction alternative. The combined weight of new construction disposal that does not exceed two pounds per square foot of building area may be deemed to meet the 50 percent minimum requirement as approved by the enforcing agency.	☒			
5.408.3 Excavated soil and land clearing debris. 100 percent of trees, stumps, rocks and associated vegetation and soils resulting primarily from land clearing shall be reused or recycled. **Exception:** Reuse, either on-or off-site, of vegetation or soil contaminated by disease or pest infestation.	☒			

SECTION A5.602
NONRESIDENTIAL OCCUPANCIES APPLICATION CHECKLISTS—continued[4]

APPLICATION CHECKLIST FOR BSC	MANDATORY	PLAN SHEET REFERENCE	VOLUNTARY[1] CALGreen Tier 1	VOLUNTARY[1] CALGreen Tier 2
A5.504.4.7.1 Resilient flooring systems, Tier 2 [BSC]. For 100 percent of floor area receiving resilient flooring, install resilient flooring that meets at least one of the following:				☐
1. Certified under the Resilient Floor Covering Institute (RFCI) FloorScore program;				
2. Compliant with the VOC-emission limits and testing requirements specified in the California Department of Public Health's 2010 Standard Method for the Testing and Evaluation Chambers, Version 1.1, February 2010;				
3. Compliant with the Collaborative for High Performance Schools California (CA-CHPS) Criteria Interpretation for EQ 7.0 and 7.1 (formerly EQ. 2.2) dated July 2012 and listed in the CHPS High Performance Product Database; or				
4. Products certified under UL GREENGUARD Gold (formerly the Greenguard Children's & Schools Program).				
A5.504.4.7.2 Verification of compliance. Documentation shall be provided verifying that resilient flooring materials meet the pollutant emission limits.			☒	☐
A5.504.4.8 Thermal insulation, Tier 1 [BSC]. Comply with the standards listed in Items 1 through 3.		☒	☐	
A5.504.4.8.1 Thermal insulation, Tier 2 [BSC] Thermal insulation, No-added Formaldehyde. Install thermal insulation which complies with Tier 1 plus does not contain any added formaldehyde.				☒
A5.504.4.8.2 Verification of compliance. Documentation shall be provided verifying that thermal insulation materials meet the pollutant emission limits.		☒	☒	☐
A5.504.4.9 Acoustical ceilings and wall panels. Comply with Chapter 8 in Title 24, Part 2 and with the VOC-emission limits defined in the 2009 CHPS criteria and listed on its High Performance Products Database.			☐	☐
A5.504.4.9.1 Verification of compliance. Documentation shall be provided verifying that acoustical finish materials meet the pollutant emission limits.			☐	☐
Note: Products compliant with CHPS criteria certified under the Greenguard Children & Schools program may also be used.				
A5.504.5 Hazardous particulates and chemical pollutants. Minimize and control pollutant entry into buildings and cross-contamination of regularly occupied areas.			☒	☐
A5.504.5.1 Entryway systems. Install permanent entryway systems measuring at least six feet in the primary direction of travel to capture dirt and particulates at entryways directly connected to the outdoors as listed in Items 1 through 3 in Section A5.504.5.1.		A2.2	☒	☐
A5.504.5.2 Isolation of pollutant sources. In rooms where activities produce hazardous fumes or chemicals, exhaust them and isolate them from their adjacent rooms as listed in Items 1 through 3 in Section A5.504.5.2.			☒	☐
5.504.5.3 Filters. In mechanically ventilated buildings, provide regularly occupied areas of the building with air filtration media for outside and return air that provides at least a MERV of 8. MERV 8 filters shall be installed prior to occupancy, and recommendations for maintenance with filters of the same value shall be included in the operation and maintenance manual.	☒	M02		
Exceptions:				
1. An ASHRAE 10-percent to 15-percent efficiency filter shall be permitted for an HVAC unit meeting the 2013 *California Energy Code* having 60,000 Btu/h or less capacity per fan coil, if the energy use of the air delivery system is 0.4 W/cfm or less at design air flow.				
2. Existing mechanical equipment.				
5.504.5.3.1 Labeling. Installed filters shall be clearly labeled by the manufacturer indicating the MERV rating.	☒			
A5.504.5.3.1 Filters, Tier 1. In mechanically ventilated buildings, provide regularly occupied areas of the building with air infiltration media for outside and return air prior to occupancy that provides at least a MERV of 11.			☒	
A5.504.5.3.1.1 Filters, Tier 2. In mechanically ventilated buildings, provide regularly occupied areas of the building with air filtration media for outside and return air prior to occupancy that provides at least a Minimum Efficiency Reporting Value (MERV) of 13.				☒
5.504.7 Environmental tobacco smoke (ETS) control. Prohibit smoking within 25 feet of building entries, outdoor air intakes and operable windows where outdoor areas are provided for smoking and within the building as already prohibited by other laws or regulations; or as enforced by ordinances, regulations or policies of any city, county, city and county, California Community College, campus of the California State University or campus of the University of California, whichever are more stringent.	☒			
Indoor Moisture and Radon Control				
5.505.1 Indoor moisture control. Buildings shall meet or exceed the provisions of *California Building Code*, CCR, Title 24, Part 2, Sections 1203 and Chapter 14.1.[3]	☒			
Air Quality and Exhaust				
5.506.1 Outside air delivery. For mechanically or naturally ventilated spaces in buildings, meet the minimum requirements of Section 120.1 of the *California Energy Code* and Chapter 4 of CCR, Title 8 or the applicable local code, whichever is more stringent.[3]	☒			
5.506.2 Carbon dioxide (CO_2) monitoring. For buildings or additions equipped with demand control ventilation, CO_2 sensors and ventilation controls shall be specified and installed in accordance with the requirements of the *California Energy Code*, CCR, Section 120(c)(4).[3]	☒			

SECTION A5.602
NONRESIDENTIAL OCCUPANCIES APPLICATION CHECKLISTS—continued[4]

APPLICATION CHECKLIST FOR BSC	MANDATORY	PLAN SHEET REFERENCE	VOLUNTARY[1] CALGreen Tier 1	VOLUNTARY[1] CALGreen Tier 2
5.410.4 Testing and adjusting. Testing and adjusting of systems shall be required for buildings less than 10,000 square feet. Applies to new systems serving additions or alterations.	☒	Spec 230593		
5.410.4.2 Systems. Develop a written plan of procedures for testing and adjusting systems. Systems to be included for testing and adjusting shall include, as applicable to the project, the systems listed in Section 5.410.4.2.	☒			
5.410.4.3 Procedures. Perform testing and adjusting procedures in accordance with applicable standards on each system as determined by the enforcing agency.	☒			
5.410.4.3.1 HVAC balancing. Before a new space-conditioning system serving a building or space is operated for normal use, balance in accordance with the procedures defined by national standards listed in Section 5.410.4.3.1 or as approved by the enforcing agency.	☒			
5.410.4.4 Reporting. After completion of testing, adjusting and balancing, provide a final report of testing signed by the individual responsible for performing these services.	☒			
5.410.4.5 Operation and maintenance manual. Provide the building owner with detailed operating and maintenance instructions and copies of guaranties/warranties for each system prior to final inspection.	☒			
5.410.4.5.1 Inspections and reports. Include a copy of all inspection verifications and reports required by the enforcing agency.	☒			
Environmental Quality				
Fireplaces				
5.503.1 Install only a direct-vent sealed-combustion gas or sealed wood-burning fireplace or a sealed woodstove and refer to residential requirements in the *California Energy Code*, Title 24, Part 6, Subchapter 7, Section 150.	☒ As applicable			
5.503.1.1 Woodstoves. Woodstoves shall comply with US EPA Phase II emission limits, where applicable.	☒			
Pollutant Control				
A5.504.1 Indoor air quality (IAQ) during construction. Maintain IAQ as provided in Sections A5.504.1.1 and A5.504.1.2.				
A5.504.1.1 Temporary ventilation. Provide temporary ventilation during construction in accordance with Section 121 of the *California Energy Code*, CCR, Title 24, Part 6 and Chapter 4 of CCR, Title 8 and as listed in Items 1 and 2 in Section A5.504.1.1.			☐	☐
A5.504.1.2 Additional IAQ measures. Employ additional measures as listed in Items 1 through 5 in Section A5.504.1.2.			☐	☐
5.504.1.3 Temporary ventilation. If the HVAC system is used during construction, use return air filters with a MERV of 8, based on ASHRAE 52.2-1999, or an average efficiency of 30% based on ASHRAE 52.1-1992. Replace all filters immediately prior to occupancy. Applies to additions or alterations.	☒			
A5.504.2 IAQ postconstruction. Flush out the building per Section A5.504.2 prior to occupancy or if the building is occupied.			☐	☐
A5.504.2.1 IAQ Testing. A testing alternative may be employed after all interior finishes have been installed, using testing protocols recognized by the United State Environmental Protection Agency (U.S. EPA) and in accordance with Section A5.504.2.1.2. Retest as required in Section A5.504.2.1.3.			☐	☐
A5.504.2.1.1 Maximum levels of contaminants. Allowable levels of contaminant concentrations measured by testing shall not exceed the following:			As applicable	As applicable
1. Carbon Monoxide (CO): 9 parts per million, not to exceed outdoor levels by 2 parts per million;			☐	☐
2. Formaldehyde: 27 parts per billion;			☐	☐
3. Particulates (PM10): 50 micrograms per cubic meter;			☐	☐
4. 4-Phenylcyclohexene (4-PCH): 6.5 micrograms per cubic meter; and			☐	☐
5. Total Volatile Organic Compounds (TVOC): 300 micrograms per cubic meter.			☐	☐
A5.504.2.1.2 Test protocols. Testing of indoor air quality should include the elements listed in Items 1 through 4.			☐	☐
A5.504.2.1.3 Noncomplying building areas. For each sampling area of the building exceeding the maximum concentrations specified in Section A5.504.2.1.1, flush out with outside air and retest samples taken from the same area. Repeat the procedures until testing demonstrates compliance.			☐	☐
5.504.3 Covering of duct openings and protection of mechanical equipment during construction. At the time of rough installation and during storage on the construction site and until final startup of the heating, cooling and ventilating equipment, all duct and other related air distribution component openings shall be covered with tape, plastic, sheetmetal or other methods acceptable to the enforcing agency to reduce the amount of dust, water and debris which may enter the system.	☒			

15000 13th Street
3/28/2017 4:09:16 PM
C:\Users\spazzoguin\Documents\IG - MEP - 13th Street - 16_spazzoguin.rvt

KOMOROUS-TOWEY ARCHITECTS
410 TWELFTH STREET, SUITE 300
OAKLAND, CA 94612
Ph: 510.446.2244 Fx: 510.446.2242
ktc@kitarch.com www.kitarch.com

INTEGRAL GROUP
427 13th Street
Oakland, CA 94612
510 663-2070 fax
510 663-2080 fax
www.integralgroup.com

REGISTERED PROFESSIONAL ENGINEER
JOHN P. McDONALD
No. M 30438
Exp. 12-31-17
MECHANICAL
STATE OF CALIFORNIA

CALGREEN CHECKLIST

ITD HEADQUARTERS

393 13TH STREET
OAKLAND, CA 94612

BID SET

REVISIONS

No	Desc	Date

© COPYRIGHT 2016

DATE: 03/31/2017

DRAWN BY: JM, EC

PROJECT NO.: 1203.22

M84

SECTION A5.602
NONRESIDENTIAL OCCUPANCIES APPLICATION CHECKLISTS—continued[4]

APPLICATION CHECKLIST FOR BSC	MANDATORY	PLAN SHEET REFERENCE	VOLUNTARY[1] CALGreen Tier 1	VOLUNTARY[1] CALGreen Tier 2
Environmental Comfort				
A5.507.1 Lighting and thermal comfort controls. Provide controls in the workplace as described in Sections A5.507.1.1 and A5.507.1.2.				
A5.507.1.1 Single-occupant spaces. Provide individual controls that meet energy use requirements in the *California Energy Code* by Sections A5.507.1.1.1 and A5.507.1.1.2.			☐	☐
A5.507.1.1.1 Lighting. Provide individual task lighting and/or daylighting controls for at least 90 percent of the building occupants.		M31 to M35	☒	☐
A5.507.1.1.2 Thermal comfort. Provide individual thermal comfort controls for at least 50 percent of the building occupants by Items 1 and 2 in Section A5.507.1.1.2.			☒	☐
A5.507.1.2 Multi-occupant spaces. Provide lighting and thermal comfort system controls for all shared multi-occupant spaces.			☒	☐
A5.507.2 Daylight. Provide daylit spaces as required for toplighting and sidelighting in the *California Energy Code*. In constructing a design, consider Items 1 through 4 in Section A5.507.3.			☐	☐
A5.507.3 Views. Achieve direct line of sight to the outdoor environment via vision glazing between 26" and 76" above finish floor for building occupants in 90 percent of all regularly occupied areas.			☐	☐
A5.507.3.1 Interior office spaces. Entire areas of interior office spaces may be included in the calculation if at least 75 percent of each area has direct line of sight to perimeter vision glazing.			☐	☐
A5.507.3.2 Multi-occupant spaces. Include in the calculation the square footage with direct line of sight to perimeter vision glazing.			☐	☐
5.507.4 Acoustical control. Employ building assemblies and components with STC values determined in accordance with ASTM E 90 and ASTM E 413 or OITC determined in accordance with ASTM E 1332, using either the prescriptive or performance method in Section 5.507.4.1 or 5.507.4.2.	☒			
5.507.4.1 Exterior noise transmission, prescriptive method. Wall and floor-ceiling assemblies exposed to the noise source making up the building envelope shall have exterior wall and roof ceiling assemblies meeting a composite STC rating of at least 50 or a composite OITC rating of no less than 40 with exterior windows of a minimum STC of 40 or OITC of 30 in the locations described in Items 1 and 2. Also applies to addition envelope or altered envelope.	☒			
5.507.4.1.1 Noise exposure where noise contours are not readily available. Buildings exposed to a noise level of 65 dB L_{eq}-1Hr during any hour of operation shall have exterior wall and roof-ceiling assemblies exposed to the noise source meeting a composite STC rating of at least 45 (or OITC 35), with exterior windows of a minimum STC of 40 (or OITC 30). Also applies to addition or alteration exterior wall.	☒ or			
5.507.4.2 Performance method. For buildings located as defined in Sections A5.507.4.1 or A5.507.4.1.1, wall and roof-ceiling assemblies making up the building envelope shall be constructed to provide an interior noise environment attributable to exterior sources that does not exceed an hourly equivalent noise level (L_{eq}-1Hr) of 50 dBA in occupied areas during any hour of operation. Also applies to addition envelope or altered envelope.	☒			
5.507.4.2.1 Site features. Exterior features such as sound walls or earth berms may be utilized as appropriate to the project to mitigate sound migration to the interior. Also applies to addition envelope or altered envelope.	☒			
5.507.4.2.1 Documentation of compliance. An acoustical analysis documenting complying interior sound levels shall be prepared by personnel approved by the architect or engineer of record.	☒			
5.507.4.3 Interior sound transmission. Wall and floor-ceiling assemblies separating tenant spaces and tenant spaces and public places shall have an STC of at least 40.	☒			
Outdoor Air Quality				
5.508.1 Ozone depletion and global warming reductions. Installations of HVAC, refrigeration and fire suppression equipment shall comply with Sections 5.508.1.1 and 5.508.1.2.	☒ As applicable			
5.508.1.1 CFCs. Install HVAC and refrigeration equipment that does not contain CFCs.[3]	☒			
5.508.1.2 Halons. Install fire suppression equipment that does not contain Halons.[3]	☒	M03		
A5.508.1.3 Hydrochlorofluorocarbons (HCFCs). Install HVAC and refrigeration equipment that does not contain HCFCs.			☐	☐
A5.508.1.4 Hydrofluorocarbons (HFCs). Install HVAC complying with either of the following:				
1. Install HVAC, refrigeration and fire suppression equipment that do not contain HFCs or that do not contain HFCs with a global warming potential greater than 150.			☐	☐
2. Install HVAC and refrigeration equipment that limit the use of HFC refrigerant through the use of a secondary heat transfer fluid with a global warming potential no greater than 1.			☐	☐
5.508.2 Supermarket refrigerant leak reduction. New commercial refrigeration systems shall comply with the provisions of this section when installed in retail food stores 8,000 square feet or more conditioned area, and that utilize either refrigerated display cases, or walk-in coolers or freezers connected to remote compressor units or condensing units. The leak reduction measures apply to refrigeration systems containing high-global- warming potential (high-GWP) refrigerants with a GWP of 150 or greater. New refrigeration systems include both new facilities and the replacement of existing refrigeration systems in existing facilities. **Exception:** Refrigeration systems containing low-global warming potential (low-GWP) refrigerant with a GWP value less than 150 are not subject to this section. Low-GWP refrigerants are nonozone-depleting refrigerants that include ammonia, carbon dioxide (CO_2), and potentially other refrigerants.	☒ As applicable	N/A		

SECTION A5.602
NONRESIDENTIAL OCCUPANCIES APPLICATION CHECKLISTS—continued[4]

APPLICATION CHECKLIST FOR BSC	MANDATORY	PLAN SHEET REFERENCE	VOLUNTARY[1] CALGreen Tier 1	VOLUNTARY[1] CALGreen Tier 2
5.508.2.1 Refrigerant piping. Piping compliant with the *California Mechanical Code* shall be installed to be accessible for leak protection and repairs. Piping runs using threaded pipe, copper tubing with an outside diameter (OD) less than $^1/_4$ inch, flared tubing connections and short radius elbows shall not be used in refrigerant systems except as noted below.	☒ As applicable Continued	Spec 230553 and 238129		
5.508.2.1.1 Threaded pipe. Threaded connections are permitted at the compressor rack.				
5.508.2.1.2 Copper pipe. Copper tubing with an OD less than $^1/_4$ inch may be used in systems with a refrigerant charge of 5 pounds or less.				
5.508.2.1.2.1 Anchorage. $^1/_4$ inch OD tubing shall be securely clamped to a rigid base to keep vibration levels below 8 mils.				
5.508.2.1.3 Flared tubing connections. Double-flared tubing connections may be used for pressure controls, valve pilot lines and oil.				
Exception: Single-flared tubing connections may be used with a multiring seal coated with industrial sealant suitable for use with refrigerants and tightened in accordance with manufacturer's recommendations.				
5.508.2.1.4 Elbows. Short radius elbows are only permitted where space limitations prohibit use of long radius elbows.				
5.508.2.2 Valves. Valves and fittings shall comply with the *California Mechanical Code* and as follows.				
5.508.2.2.1 Pressure relief valves. For vessels containing high-GWP refrigerant, a rupture disc shall be installed between the outlet of the vessel and the inlet of the pressure relief valve.				
5.508.2.2.1.1 Pressure detection. A pressure gauge, pressure transducer or other device shall be installed in the space between the rupture disc and the relief valve inlet to indicate a disc rupture or discharge of the relief valve.				
5.508.2.2.2 Access valves. Only Schrader access valves with a brass or steel body are permitted for use.				
5.508.2.2.2.1 Valve caps. For systems with a refrigerant charge of 5 pounds or more, valve caps shall be brass or steel and not plastic.				
5.508.2.2.2.2 Seal caps. If designed for it, the cap shall have a neoprene O-ring in place.				
5.508.2.2.2.2.1 Chain tethers. Chain tethers to fit over the stem are required for valves designed to have seal caps.				
Exception: Valves with seal caps that are not removed from the valve during stem operation.				
5.508.2.3 Refrigerated service cases. Refrigerated service cases holding food products containing vinegar and salt shall have evaporator coils of corrosion-resistant material, such as stainless steel; or be coated to prevent corrosion from these substances.				
5.508.2.3.1. Coil coating. Consideration shall be given the heat transfer efficiency of coil coating to maximize energy efficiency.				
5.508.2.4 Refrigerant receivers. Refrigerant receivers with capacities greater than 200 pounds shall be fitted with a device that indicates the level of refrigerant in the receiver.				
5.508.2.5 Pressure testing. The system shall be pressure tested during installation prior to evacuation and charging.				
5.508.2.5.1 Minimum pressure. The system shall be charged with regulated dry nitrogen and appropriate tracer gas to bring system pressure up to 300 psig minimum.				
5.508.2.5.2 Leaks. Check the system for leaks, repair any leaks, and retest for pressure using the same gauge.				
5.508.2.5.3 Allowable pressure change. The system shall stand, unaltered, for 24 hours with no more than a +/- one pound pressure change from 300 psig, measured with the same gauge.				
5.508.2.6 Evacuation. The system shall be evacuated after pressure testing and prior to charging.				
5.508.2.6.1 First vacuum. Pull a system vacuum down to at least 1000 microns (+/-50 microns), and hold for 30 minutes.				
5.508.2.6.2 Second vacuum. Pull a second system vacuum to a minimum of 500 microns and hold for 30 minutes.				
5.508.2.6.3 Third vacuum. Pull a third vacuum down to a minimum of 300 microns, and hold for 24 hours with a maximum drift of 100 microns over a 24-hour period.				

1. Green building measures in this table may be mandatory if adopted by a city, county, or city and county as specified in Section 101.7.
2. Required prerequisite for this Tier.
3. These measures are currently required elsewhere in statute or in regulation.
4. This application checklist is non-regulatory, intended only as an aid to the user and may not contain complete code language. Refer to Chapter 5 and Appendix Chapter A5 for complete code provisions.

KOMOROUS-TOWEY ARCHITECTS
410 TWELFTH STREET, SUITE 300
OAKLAND, CA 94612
Ph: 510.446.2244 Fx: 510.446.2242
ktc@ktarch.com www.ktarch.com

INTEGRAL GROUP
427 13th Street
Oakland, CA 94612
510 663-2070 tel
510 663-2080 fax
www.integralgroup.com

REGISTERED PROFESSIONAL ENGINEER
JOHN P. McDONALD
No. M 30438
Exp. 12-31-17
MECHANICAL
STATE OF CALIFORNIA

CALGREEN CHECKLIST

ITD HEADQUARTERS

393 13TH STREET
OAKLAND, CA 94612

BID SET

REVISIONS

No	Desc	Date

© COPYRIGHT 2016

DATE: 03/31/2017

DRAWN BY: JM, EC

PROJECT NO.: 1203.22

M85

15000 13th Street
3/28/2017 4:09:22 PM
C:\Users\apazcoguin\Documents\IG - MEP - 13th Street - 16_apazcoguin.rvt