DRAFT ENVIRONMENTAL IMPACT REPORT

CAMP SWEENEY REPLACEMENT PROJECT

SCH # 2015102054

PREPARED FOR:

County of Alameda
General Services Agency
1401 Lakeside Drive, 8th Floor
Oakland, CA 94612

PREPARED BY:

Lamphier – Gregory
1944 Embarcadero
Oakland, Ca 94606

January 2016

DRAFT
ENVIRONMENTAL IMPACT REPORT

FOR THE

CAMP SWEENEY REPLACEMENT PROJECT

SCH # 2015102054

Prepared for:

County of Alameda
General Services Agency
1401 Lakeside Drive, 8th Floor
Oakland, California 94612

Contact: Maritza Delgadillo (510) 280-9588

Prepared by:

Lamphier-Gregory
1944 Embarcadero
Oakland, CA 94606

January 2016

CONTENTS

Page

Chapter 1: Introduction 1-1
Purpose of the Environmental Impact Report 1-1
EIR Review Process 1-1
Content and Organization of the EIR 1-2
Impacts Found not to be Significant 1-4

Chapter 2: Executive Summary and Impact Overview 2-1
Purpose and Need 2-1
Project Description 2-2
Impacts and Mitigation Measures 2-2
Alternatives 2-4
Environmentally Superior Alternative 2-4
Cumulative Impacts 2-17
Growth Inducement 2-17
Areas of Controversy 2-18

Chapter 3: Project Description 3-1
Introduction and Project Overview 3-1
Origins of the Project 3-5
Project Objectives 3-7
Detailed Project Description 3-8
Existing Site Conditions 3-14
Required Approvals 3-17

Chapter 4: Land Use and Planning 4-1
Environmental Setting 4-1
Regulatory Setting 4-1
Environmental Consequences and Mitigation Measures 4-5

Chapter 5: Aesthetics and Visual Quality 5-1
Environmental Setting 5-1
Regulatory Setting 5-8
Environmental Consequences and Mitigation Measures 5-9

Chapter 6: Geology, Soils, and Seismicity 6-1
Environmental Setting 6-1
Regulatory Setting 6-7
Environmental Consequences and Mitigation Measures 6-8

Chapter 7: Hydrology and Water Quality 7-1

Environmental Setting 7-1
Regulatory Setting 7-1
Environmental Consequences and Mitigation Measures 7-3

Chapter 8: Biological Resources 8-1
Environmental Setting 8-1
Regulatory Setting 8-8
Environmental Consequences and Mitigation Measures 8-14

Chapter 9: Transportation 9-1
Environmental Setting 9-1
Regulatory Setting 9-7
Environmental Consequences and Mitigation Measures 9-9

Chapter 10: Noise 10-1
Environmental Setting 10-1
Regulatory Setting 10-5
Environmental Consequences and Mitigation Measures 10-6

Chapter 11: Air Quality and Greenhouse Gas Emissions 11-1
Environmental Setting 11-1
Regulatory Setting 11-10
Environmental Consequences and Mitigation Measures 11-14

Chapter 12: Hazards and Hazardous Materials 12-1
Environmental Setting 12-1
Regulatory Setting 12-3
Environmental Consequences and Mitigation Measures 12-4

Chapter 13: Public Services 13-1
Environmental Setting 13-1
Regulatory Setting 13-4
Environmental Consequences and Mitigation Measures 13-6

Chapter 14: Utilities 14-1
Environmental Setting 14-1
Regulatory Setting 14-2
Environmental Consequences and Mitigation Measures 14-5

Chapter 15: Cultural and Historic Resources 15-1
Environmental Setting 15-1
Regulatory Setting 15-9
Environmental Consequences and Mitigation Measures 15-12

Chapter 16: Alternatives 16-1
Introduction 16-1
Alternatives Considered and Rejected 16-2
Criteria for Selecting Project Alternatives 16-3
Alternatives Selected for Further Analysis 16-4
Alternative 1: The No-Project Alternative 16-5

Alternative 2: The Existing Site Reuse Alternative 16-6
Alternative 3: The Non-Fairmont Campus Off-Site Alternative 16-11
Environmentally Superior Alternative 16-17

Chapter 17: Growth Inducement and Cumulative Impacts 17-1
Growth-inducing Impacts 17-1
Cumulative Impacts 17-1

Chapter 18: Report Preparation 18-1
Environmental Impact Report Preparers 18-1
Bibliography 18-2

Chapter 19: Acronyms and Terms 19-1
Acronyms 19-1
Terms 19-3

Appendices

Note: Appendices are included on a CD attached to the back cover of the printed version of this document

Appendix A: Notice of Preparation, Scoping Meeting Summary and Public Comments
Appendix B: Air Quality Modeling Results, Health Risk Screening Analysis and Greenhouse Gas and Climate Change Screening Analysis
Appendix C: Camp Wilmont Sweeney, Alameda County, Historic Resource Evaluation
Appendix D: Tree Survey Report, Camp Sweeney, San Leandro, California
Appendix E: Appendices to Transportation Impact Analysis, Level of Service Methodology And Turning Movement Count Data and Traffic Signal Timing Sheets

Tables

Page

2.1: Summary of Environmental Impacts and Mitigation Measures 2-5
3.1: Camp Sweeney Area Calculations 3-11
8.1: Special-Status Plant Species That Have the Potential to Occur in the Project Vicinity 8-4
8.2: Special-Status Animal Species That Have the Potential to Occur in the Project Vicinity 8-6
9.1: Peak Hour Intersection Levels of Service – Existing Conditions 9-5
9.2: Vehicle Trip Generation Forecast 9-12
9.3: Peak Hour Intersection Level of Service for Existing plus Project Conditions 9-16
10.1 Definitions of Acoustical Terms 10-1
10.2 Typical Sound Levels Measured in the Environment and Industry 10-2
10.3 Summary of Short-Term Noise Measurement Data 10-4
11.1: Ambient Air Quality Standards for Criteria Pollutants Parts Per Million (ppm) or Micrograms per Cubic Meter (μg/m^3) 11-3
11.2: Summary of Criteria Air Pollution Monitoring Data 11-4
11.3: Daily Criteria Pollutant Emissions, Construction (Pounds per Day) 11-15
11.4: Maximum Daily and Annual Regional Air Pollutant Emissions, Operations 11-17
11.5: GHG Emissions 11-19
16.1: Summary of Project Alternatives 16-4

16.2: Comparison of Impacts – Project Alternatives 16-5
16.3: Comparative Evaluation of Alternative Off-Campus Sites 16-12

Figures

Page

3.1: Project Location 3-2
3.2: Fairmont Campus and Institutional Uses 3-3
3.3: Site Context 3-4
3.4: Site Plan 3-9
3.5: Illustrative Landscape Plan 3-10
3.6: Cross Section Illustration of Site 3-12
3.7: Illustrative Fence Concepts 3-13
3.8: Conceptual Design for Walkways 3-16
3.9: Suggested Landscape with Bio Filtration Features 3-16
5.1: Photograph Viewpoint Locations and Direction 5-2
5.2: Van Avenue, Looking North 5-3
5.3: Van Avenue Looking South from Placer Street 5-3
5.4: View of Fairmont Drive Looking Southwest 5-4
5.5: Project Site Looking North from South Access Road Entrance 5-4
5.6: Project Site Looking North 5-5
5.7: Project Site Looking South from North Access Road 5-5
5.8: View of the Project Site from Van Avenue at Placer Drive 5-6
5.9: Fairmont Ridge 5-7
5.10: North Access Road 5-7
5.11: Proposed "Camp Like" Architectural Character Intended for Camp Sweeney 5-8
6.1: Seismic Faults in the San Francisco Bay Area 6-3
6.2: Alquist-Priolo Earthquake Hazard Zone 6-4
6.3 Results of Seismic Investigations to Determine Zones Safe for Buildings 6-7
8.1: Potential Seasonal Wetland 8-3
8.2: Tree Survey 8-19
9.1: Study Intersections 9-2
9.2: Existing Conditions Traffic Volumes, Controls and Lane Geometry 9-4
9.3: Existing Pedestrian Facilities 9-6
9.4: Existing and Proposed Bicycle Facilities 9-7
9.5: Proposed Site Access 9-10
9.6: Proposed Fairmont Drive U-Turn Lane 9-11
9.7: Project Trip Distribution and Trip Assignment 9-14
9.8: Existing plus Project Conditions Turning Movement Volumes, Controls and Lane Geometry 9-15
10.1: Noise Measurement Locations 10-4
10.2: Noise Levels Recorded at Location 1 (Hillcrest Knolls) 10-11
15.1: Camp Sweeney – Historic Structures 15-5
16.1: Fault Trench Locations – Existing Camp Sweeney Site 16-9
16.2: Location of Dormant Landslides Near Existing Campus Site 16-10

1

INTRODUCTION

PURPOSE OF THE ENVIRONMENTAL IMPACT REPORT

The California Environmental Quality Act and the California Environmental Quality Act Guidelines (together "CEQA") require an Environmental Impact Report (EIR) to be prepared for any project which may have a significant impact on the environment. An EIR is an informational document, the purposes of which, according to CEQA are "to provide public agencies and the public in general with detailed information about the effect which a proposed project is likely to have on the environment; to list ways in which the significant effects of such a project might be minimized; and to indicate alternatives to such a project." The information contained in this EIR is intended to be objective and impartial, and to enable the reader to arrive at an independent judgment regarding the significance of the impacts resulting from the proposed project.

This Draft EIR evaluates the potential environmental effects that may result from the proposed Camp Sweeney Replacement Project (Project) which would involve construction of new facilities on a currently vacant 10-acre portion of the 206-acre Fairmont Campus in an unincorporated area of Alameda County, adjacent to the City of San Leandro, California. The Project includes the subsequent demolition of the existing Camp Wilmont Sweeney buildings (Camp Sweeney) and restoration of the site to its former natural condition. The applicants are the Alameda County General Services Agency (GSA) and the Alameda County Probation Department. The Lead Agency is the County of Alameda.

EIR REVIEW PROCESS

This EIR is intended to enable County decision makers, public agencies, and interested citizens to evaluate the environmental effects of the proposed Project. An EIR does not control the Lead Agency's ultimate discretion on the Project. As required under CEQA, the Lead Agency must respond to each significant effect identified in the EIR by making findings and, if necessary and warranted, by adopting a statement of overriding considerations. In accordance with California law, the EIR must be certified before any action on the Project can be taken. However, EIR certification does not constitute Project approval.

Together, this Draft EIR and the subsequent Final EIR will constitute the EIR for the Project. During the review period for the Draft EIR, interested individuals, organizations, and agencies may offer their comments on its evaluation of Project impacts and alternatives. The comments received during this public review period will be compiled and presented together with responses to these comments in the Final EIR. County decision makers will review the EIR documents and will determine whether or not the EIR provides a full and adequate appraisal of the Project and its alternatives.

In reviewing the Draft EIR, readers should focus on the sufficiency of the document in identifying and analyzing the possible environmental impacts associated with the Project. Readers are also encouraged

to review and comment on ways in which significant impacts associated with this Project might be avoided or mitigated. Comments are most helpful when they suggest additional specific alternatives or mitigation measures that would provide better ways to avoid or mitigate significant environmental impacts. Reviewers should explain the basis for their comments and, whenever possible, should submit data or references in support of their comments.

This Draft EIR will be circulated for a 45-day public review period. Written comments may be submitted to the following address:

Maritza Delgadillo, Senior Project Manager
Alameda County General Services Agency, Technical Services Division
1401 Lakeside Drive, 8th Floor
Oakland, CA 94612
510/208-9588
Maritza.delgadillo@acgov.org

After reviewing the Draft EIR and the Final EIR and certifying the EIR as adequate and complete, the Alameda County Board of Supervisors will be in a position to consider approval, denial, or modification of the Project and related actions.

CONTENT AND ORGANIZATION OF THE EIR

A Notice of Preparation (NOP) was issued in October 2015 to solicit comments from public agencies and the public regarding the scope of the environmental evaluation for the Project. In addition, an EIR Scoping Meeting was held on November 5, 2015 at the County Planning Commission's hearing room at 224 West Winton Avenue, Hayward, California. Four members of the public attended the meeting. A description of the Project was presented along with the proposed scope of the EIR. Input from the audience was received during the meeting and additional written comments were received following the meeting. The NOP and all written comments received during the public comment period for the NOP are presented in Appendix A. These comments were taken into consideration during Draft EIR preparation.

This Draft EIR consists of the following chapters:

Chapter 1: Introduction – Outlines the purposes of the EIR and provides general background information.

Chapter 2: Executive Summary – Briefly summarizes the findings set forth in the body of the EIR.

Chapter 3: Project Description – Provides a description of the purposes and needs that would be served by the proposed Project and a detailed description of the Project, including its physical setting, the proposed new facilities, and the schedule during which the Project would be constructed and placed into operation.

Chapters 4 through 15: Affected Environment, Environmental Consequences, and Mitigation Measures – Address each aspect of the environment that may be significantly affected by the Project. These chapters include:

4. Land Use and Planning
5. Aesthetics and Visual Quality
6. Geology, Soils, and Seismicity

7. Hydrology and Water Quality
8. Biological Resources
9. Transportation
10. Noise
11. Air Quality and Greenhouse Gas Emissions
12. Hazards and Hazardous Materials
13. Public Services
14. Utilities
15. Cultural and Historic Resources

Within each chapter, the following information is provided:

- A description of the environmental setting or conditions which may affect or be affected by the proposed Project
- A description of the regulatory setting which includes the regulations and policies that govern aspects of the Project
- The potential significant environmental effects likely to result from project implementation
- Recommended mitigation measures that are to be implemented to avoid or substantially reduce any significant project-related environmental effects

Chapter 16: Alternatives – Provides **a** description of alternatives to the Project, including the "No Project" alternative, the "Existing Site Reuse" alternative, and the "Off-Site" alternative. The Alternatives chapter includes a comparative assessment and presentation of the environmental effects associated with each of the alternatives evaluated.

Chapter 17: Growth Inducement and Cumulative Impacts – Addresses other general Project impacts required by CEQA, including a description of growth-inducing impacts associated with the Project and cumulative impacts.

Chapter 18: Report Preparation – Provides a listing of the persons involved with preparing the Draft EIR, persons contacted, and materials used.

Chapter 19: Acronyms and Terms – A list and explanation of acronyms and technical terms used in the document.

IMPACTS FOUND TO BE LESS THAN SIGNIFICANT

As part of the scoping process for the Project, the following impact areas were considered and found to have less than significant or no impact potential.

Agriculture and Forestry Resources

The Project site considered in this EIR consists of several substantially underutilized parking lots and internal circulation roadways which previously served as an ancillary use associated with the former Juvenile Hall. That facility has been removed and replaced by the Juvenile Justice Center, located uphill and to the north and east of the Project site. The Project site is surrounded by urban development, is not listed in a State farmland or timberland program, and has marginal or urban soils. The site has been highly disturbed by prior uses and does not currently provide any agricultural or timberland production.

The Project site and vicinity do not conform to any category of agricultural or forest land and therefore the Project site does not warrant protection.

The Project site is not suitable for agriculture or forestry resources and use of the site for the proposed Camp Sweeney would not adversely affect other agricultural or timber land. Therefore, the Project would have no impacts related to farmland, timberland or agricultural activity and these issues do not warrant further evaluation in the EIR.

Mineral Resources

There are no mineral resources at the Project site. No economically important natural resources are located on or under the Project site and therefore no impacts would occur. No other economically valuable natural resources are present at or near the site.

Population and Housing

Camp Sweeney is an institutional use consisting of a secure residential program involving education and rehabilitation of adjudicated youth. The existing Camp Sweeney facilities do not include any private residences and none would be affected by the Project. No individuals would be displaced and no private housing would be demolished or would be built as part of the Project. The Project would increase the capacity of Camp Sweeney to accommodate additional youth beyond the limits of existing facilities so that it would be able to accept females, but no aspect of the Project would affect population or housing in the broader community.

Recreation

Currently, Camp Sweeney youth use the athletic field for baseball and other sports next to the multi-purpose recreation building at the existing campus; they also use some off-site facilities in Hayward and San Leandro. The proposed Project would include a new gymnasium and improved on-site sports field at the site of the former Juvenile Hall plus outdoor basketball courts; these new facilities, all on-site, would provide a full complement of recreational facilities at Camp Sweeney upon completion of the Replacement Project, ending any need for off-site facilities in San Leandro, Hayward or elsewhere. For this reason, the Project would have no impact on recreational facilities.

2

EXECUTIVE SUMMARY AND IMPACT OVERVIEW

This Draft EIR was prepared in conformance with the California Environmental Quality Act (CEQA). The County of Alameda is the CEQA Lead Agency. The document evaluates the potential environmental effects associated with the proposed development of the Camp Sweeney Replacement Project on a 10-acre site located at 2400 Fairmont Drive in Alameda County, California. A summary of the Purpose and Need for the project, Project Description and Alternatives is provided below. Additional detail is provided in **Chapter 3, Project Description.**

PURPOSE AND NEED

The existing Camp Wilmont Sweeney is located in the hills above San Leandro, in an unincorporated area within Alameda County, California. Camp Sweeney was constructed in the late 1950s and has been in operation since that time. Camp Sweeney is a minimum security residential program for adolescent males ranging in age from 15 to 18 who have been adjudicated by the Juvenile Court for minor non-violent criminal offenses and assigned to the facility for a 6- to 12-month placement. The County of Alameda has determined that the existing facility should be replaced with a new integrated campus that accommodates both male and female detainees and a Special Programming building.[1]

The existing Camp Sweeney is constructed on a hillside in close proximity to the Hayward Fault, an active earthquake fault with a potential for causing severe ground shaking with an estimated 32% chance of a major seismic event during the next 30 years (USGS 1999). Traces of the Hayward Fault are presumed to extend through some parts of the existing Camp Sweeney campus site. In June 2008, the Alameda County Board of Supervisors authorized a Needs Assessment to evaluate the current and future safety and security requirements of Camp Wilmont Sweeney.[2] The key findings of the 2008 Needs Assessment, as summarized in its Executive Summary are as follows:

> *"…the Camp is an aged, obsolete facility that needs earthquake retrofitting, and it should be replaced as soon as feasible. Specifically, the needs assessment includes the following:*
>
> - *Camp Wilmont Sweeney, built in 1957, is inappropriately designed for secure care, in a condition which does not merit renovation, and presents unusual liability to the community and County. Camp Wilmont Sweeney should undergo planning for replacement.*

[1] The Special Programming building is designed for male youth associated with more serious crimes than the typical Camp Sweeney resident but not so serious as to require admission to the nearby Juvenile Justice Center, and for boys whose behavior would be disruptive to others within the Camp.

[2] Carter Goble Lee, *Alameda County Juvenile Facilities Needs Assessment Final Report*, December 11, 2008.

- *Camp Sweeney, "grand-fathered" as a Juvenile Camp, does not comply with minimal standards and criteria of the California Title 24 statute. Several required standards for Fire Safety, Health and Sanitation, Sleeping Areas for General and Disabled, Medical and Mental Health, Acoustics, and Security are deficient.*
- *The current physical plant does not support a therapeutic evidence-based program. Best practices for juvenile treatment call for facilities that support small groups to enhance personal contact and involvement of staff with youth.*
- *The current site is not secure and allows frequent juvenile walk offs. It is not designed for the more serious offenders which are increasingly housed at this facility as a result of Senate Bill 81. Additionally, there is no housing for the female population which statistically is the highest growth population within the County.*

While the immediate challenges of Camp Wilmont Sweeney could be addressed through retrofit of existing facilities or reconstruction with a minimal increase in the number of beds, the county's needs could be best served by construction of a new 150 bed facility that includes 30 beds for females and serious offenders typically placed at the Division of Juvenile Justice.[3]

"All youth reside in a single 80-bed open dormitory, while Title 24 requires 10% of beds to be single occupancy sleeping rooms for specialized needs. There are no Medical and Mental Health, Infirmed [sic] *Care, or High-Risk single occupancy units. Camp Wilmot Sweeney has no purpose built Reception and Intake Admissions Area, locked Holding or Safety Room. The dormitory floor area does not have sufficient dayroom space. Dayroom activities occur in the site's least structurally sound building, located approximately 300 feet across the compound. The building is deteriorating and does not provide adequate space for physical recreation. Academic classrooms are small and have no communications systems, as required, to respond to emergencies. Meals are prepared at one of the Probations Departments' other facilities, delivered cold and re-thermed. Youth eat in the cafeteria, which sits atop the Hayward Fault. The building shows signs of structural failure, with cracks in the foundation and obvious shifting of the ground pod.*

Currently, Camp Sweeney has a rated capacity of beds for 105 beds for juvenile males in its single dormitory facility. By program, capacity has been set at 80 youth. The facility school has four classrooms, with no area for special needs training or trade programs. The building that is in the worst physical condition, the Recreation building, has been cited for demolition. All buildings are in conditions which do not merit re-investment for renovation. Two buildings, the dormitory and the cafeteria, sit atop the Hayward Fault and present unique potential for continued significant deterioration. Staff has suggested that, with improved classification, a small percentage of youth housed in at Camp Sweeney could be reassigned into more appropriate alternative programs."

In February 2009, Alameda County was awarded grant funding under Senate Bill 81 ("Juvenile Justice Realignment" bill) from the California Board of State and Community Corrections for the construction of a new Camp Sweeney to address the identified needs and concerns.

With regard to seismic safety concerns at the existing campus, the County's geotechnical consultant, Kleinfelder, was asked recently to assess the feasibility of using the existing Camp Sweeney site for the proposed Camp Sweeney Replacement Project.[4] Kleinfelder's letter report presented a brief summary of

[3] Ibid. P. ES-1.

[4] Kleinfelder, *Preliminary Geologic Assessment - Existing Camp Sweeney Site, 2400 Fairmont Drive San Leandro, California*, January 12, 2016.

prior studies and a preliminary assessment of geologic and seismic conditions. The letter report confirmed potential seismic and other geotechnical risks and recommended more detailed investigation to establish with greater certainty the geologic and seismic feasibility of using the existing campus as the site for the Project.

The fundamental reasons for undertaking the Project at the proposed site are:

- Proximity to the JJC and its related functions is critically important and allows construction of the new Camp without disruption to the occupants of the existing Camp. Previous relocations of staff and youths for repairs to seismic damage were extremely disruptive.
- The gently sloping site lends itself well to allow for the separation of males and females without the use of internal fencing as well as the separation of the Regular and Special Programming needs. The site slopes upward at a lesser grade than Fairmont and allows for the "tucking in" of the buildings.
- There are no structures to demolish or abate on the site thereby making access to it for proposed site work more readily and quickly achievable.
- Access to the site directly from Fairmont by visitors, staff, and security and fire/life safety personnel is desirable. Access to utility trench located within Fairmont Drive is much more direct and more efficient

PROJECT DESCRIPTION

The Project would involve construction of a new campus designed to accommodate 120 adjudicated youth: 64males, 32 females and 24 males in a Special Programming building. The proposed campus would consist of an Administration Building, a Girls Dormitory, two Boys Dormitories, a Special Programming Building, Food Services and Gymnasium Building and a Programs Building. The campus would occupy a currently vacant 10-acre site within the 206-acre Fairmont Campus which houses the County's Juvenile Justice Center and several other health and mental health care facilities. The campus would be secured with perimeter fencing and state-of-the-art security systems to prevent walk-offs or contraband intrusion from the outside. The proposed location would retain operational proximity to the County's Juvenile Justice Center (JJC), allowing easy movement between the facilities by staff, delivery of meals and supplies, and access to medical services which are provided at the JJC only. Once the Replacement Project is complete, existing Camp buildings would be demolished and the site restored to its former natural condition. The applicants are the Alameda County General Services Agency (GSA) and the Alameda County Probation Department. The Lead Agency is the County of Alameda.

IMPACTS AND MITIGATION MEASURES

Table 2.1 provides a summary of the environmental impacts of the Project as identified in this EIR. The summary is based on the detailed discussions of the impacts as provided in the respective chapters of this EIR.

A finding of "No Impact" means that the environmental impact category is inapplicable, or that the Project characteristics mean that there is no potential for impacts within that environmental category. A finding of "Less Than Significant" means that, although the environmental impact category could apply, and the Project could have an adverse effect in that area of concern, the severity of the impact would be less than significant. Impacts that are categorized as "Potentially Significant and Mitigable" are impacts for which mitigation measures are recommended to avoid or reduce the environmental effects to a less

than significant level by avoiding, minimizing, rectifying, reducing or compensating for the impact that would otherwise be significant.

The analysis has concluded that all potentially significant impacts could be avoided or mitigated; therefore, no impacts associated with the proposed Project have been identified as Significant and Unavoidable.

ALTERNATIVES

The CEQA Guidelines require the consideration of a range of reasonable alternatives to the proposed project, alternatives that could feasibly attain most of the objectives of the proposed project and that are capable of eliminating significant adverse impacts of the project or reducing them to a less-than-significant level. Chapter 16 includes a brief explanation of three alternatives that were considered but rejected from further analysis: the Reduced Scale Alternative, the Former Juvenile Hall Site Alternative and the Other Fairmont Campus Sites Alternative; each of these was rejected for lack of feasibility. The project alternatives evaluated in greater depth include the CEQA-required No Project Alternative, the Existing Site Reuse Alternative and the Non Fairmont Campus Off-Site Alternative.

ENVIRONMENTALLY SUPERIOR ALTERNATIVE

The *CEQA Guidelines* require that an alternative that is environmentally superior to the proposed project be identified in the EIR. If the alternative with the least environmental impact is the “no project” alternative, then one of the other remaining alternatives must be designated as the environmentally superior alternative. As presented in Chapter 16, Alternatives, Alternative 2, the Existing Site Reuse Alternative is presented as the only alternative that is potentially superior environmentally to the Project although its feasibility in relation to geologic concerns and other factors is uncertain. On balance, the impacts of both the Project and Alternative 2 are similar (i.e., either less than significant, or able to be mitigated to a level of less than significant), with only marginal differences in the degree to which these effects approach the significance thresholds. Alternative 2 would avoid or substantially reduce aesthetic and construction-period impacts to nearby neighbors as compared to the Project, but the Project’s aesthetics and construction-period effects would not be significant with implementation of required mitigation measures. The key difference between the Project and Alternative 2 is the certainty of known geologic hazards at the Project site, and the Project’s layout which is specifically designed to address those geologic hazards; versus the uncertainty of potential geological hazards at the Alternative 2 site and therefore the lack of a precise design plan that can be known as being fully capable of appropriately addressing potential geologic hazards. Additional site investigations of the Alternative 2 site would be necessary to determine whether this site could provide seismically safe building sites, and such investigations have not been conducted. Because of the certainty of the design of the Project in addressing known geologic hazards, the Project is marginally environmentally superior to all other alternatives considered in this EIR.

TABLE 2.1
SUMMARY OF ENVIRONMENTAL IMPACTS AND MITIGATION MEASURES

Impact	Significance	Mitigation Measures	Impact after Mitigation
Aesthetics and Visual Quality			
IMPACT 5.1: Creation of a new source of substantial light or glare, which would adversely affect day or nighttime views in the area.	Potentially Significant	**Mitigation Measure Visual – 5.1: Compliance with Lighting Standards.** The Project shall limit exterior lighting for outdoor parking areas and walkways to light sources not higher than 24 feet, that create a cone of direct illumination not greater than 60 degrees from a light source higher than 6 feet, and that allow exterior light to shine directly onto an adjacent street or property; maximum illumination at ground level should not exceed 3 foot-candles or 0.5 foot-candles measured at the closest residential property line. Shielding shall be used where feasible and effective to prevent glare or direct illumination on adjacent properties	Less Than Significant
Geology, Soils, and Seismicity			
IMPACT 6.1: Risk of Loss, Injury or Death Involving Rupture of a Known Earthquake Fault	Potentially Significant	**Mitigation Measure Geology – 6.1: Site Design for Fault Avoidance.** The development at the site shall be designed to avoid placing any structures for human occupancy within 25 feet of the surveyed location of any active fault traces. Design-level investigations and construction monitoring shall verify that the project conforms to all applicable codes and regulations. Areas where active faults have been identified shall be used only for open space. Utilities shall not be built within the geologic setback zone or cross the fault zone.	Less Than Significant
IMPACT 6.2: Risk of Loss, Injury or Death Involving Strong Seismic Ground Shaking	Potentially Significant	**Mitigation Measure Geology – 6.2: Seismic Design.** The Project shall be designed to address the projected seismic shaking hazards present at the site, in conformance with the Uniform Building Code, California Building Code and Board of Corrections design standards for juvenile detention facilities.	Less Than Significant

Impact	Significance	Mitigation Measures	Impact after Mitigation
IMPACT 6.3: Risk of Loss, Injury or Death Involving Liquefaction or Densification	Potentially Significant	**Mitigation Measure Geology – 6.3: Soil Remediation**. The recommendation of the geotechnical engineer to remediate the soil conditions shall be implemented as the first phase of site preparation. This includes removal of all undocumented fill and alluvial material beneath the building areas followed by replacement with quality controlled engineered fill in accordance with the engineer's criteria for moisture content and compaction. The material shall be removed to a minimum distance of 5 feet (horizontally) outside of the building footprints. The native, potentially expansive fill can then be compacted to within 36 inches of planned finished grade. Within the upper 36 inches, non-expansive imported fill or chemically modified (i.e., lime-treated) native fill can be placed within the upper 36 inches of finished grade.	Less Than Significant
IMPACT 6.4: Risk of Loss, Injury or Death Involving Landslides	Less than Significant	None required	Less than Significant
IMPACT 6.5: Soil Erosion	Potentially Significant	**Mitigation Measure Geology – 6.5 Implementation of a SWPPP.** The SWPPP will need to include stormwater quality BMPs that will reduce runoff of sediment and other pollutants during construction to less than significant levels. Some of the post-construction source control BMPs that could be included in the SWPPP would reduce the generation of pollutants from activities such as lawn maintenance, vehicle use, material storage, and waste collection/recycling. In order to be approved by the RWQCB, the SWPPP will need to demonstrate that implementation will reduce potential soil erosion to a level of less than significant.	Less Than Significant
IMPACT 6.6: Soil Instability	Potentially Significant	**Mitigation Measure Geology – 6.6: Implement Mitigation Measure 6.3** (as described above).	Less Than Significant
IMPACT 6.7: Expansive Soils	Potentially Significant	**Mitigation Measure Geology – 6.7: Implement Mitigation Measure 6.3 (as described above).**	Less Than Significant

Impact	Significance	Mitigation Measures	Impact after Mitigation
Hydrology and Water Quality			
IMPACT 7.1: Violation of Water Quality Standards	Potentially Significant	**Mitigation Measure Hydrology/Water Quality – 7.1: Preparation and Implementation of a SWPPP.** The County of Alameda shall prepare and implement a SWPPP as required by the NPDES General Permit. The SWPPP shall be consistent with the terms of the General Permit, the Manual of Standards for Erosion and Sedimentation Control Measures by the Association of Bay Area Governments, policies and recommendations of the local urban runoff program (city and/or county) and the Staff Recommendations of the RWQCB. The SWPPP shall incorporate specific measures to reduce and treat runoff from developed areas of the site by means of vegetative buffers, grassy swales or other means, to be effective for the life of the Project, and shall incorporate BMPs to control sediment and erosion, both during the building process and in the long-term.	Less Than Significant
IMPACT 7.2: Exceed Capacity of Stormwater Infrastructure / Contribute Polluted Runoff	Potentially Significant	**Mitigation Measure Hydrology/Water Quality – 7.2: Implement Mitigation Measure 7.1, Preparation and Implementation of a SWPPP** (as described above).	Less Than Significant
Biological Resources			
IMPACT 8.1: Special-Status Species	Potentially Significant	**Mitigation Measure Biology – 8.1a: Preconstruction Nesting Bird Surveys.** To the extent feasible, construction activities shall occur during the non-nesting season (September 1 to January 31). For any construction activities conducted during the nesting season (February 1 to August 31), a qualified biologist shall conduct a preconstruction nest survey of all trees or other suitable nesting habitat in and within 250 feet of the limits of work. The survey shall be conducted no more than 15 days prior to the start of work. If the survey indicates the presence of nesting birds, the biologist shall determine an appropriately sized buffer around the nest in which no work shall be allowed	Less Than Significant

Impact	Significance	Mitigation Measures	Impact after Mitigation
		until the young have successfully fledged. The size of the nest buffer shall be determined by the biologist and shall be based on the nesting species and its sensitivity to disturbance. In general, buffer sizes of up to 250 feet for raptors and 50 feet for other birds should suffice to prevent substantial disturbance to nesting birds, but these buffers may be increased or decreased, as appropriate, depending on the bird species and the level of disturbance anticipated near the nest. **Mitigation Measure Biology – 8.1b: Preconstruction Roosting Bat Surveys.** Preconstruction surveys for roosting bats shall be conducted prior to demolition of buildings on the site. The surveys shall be conducted by a qualified biologist no more than 15 days prior to demolition. If bat roosts are encountered, demolition shall be postponed until bats have been relocated. Roost entrances shall be fitted with one-way doors that allow exits but prevent entrance for a period of several days to encourage bats to relocate. If maternity roosts are found, the structure with the maternity roost shall be avoided and bat relocation efforts postponed until the offspring have fledged.	
IMPACT 8.2: Loss or Modifications to Wetlands	Potentially Significant	**Mitigation Measure Mitigation Measure Biology – 8.2a: Wetland Setback.** The seasonal wetland adjacent to the visitor's parking lot shall have a minimum 20-foot setback from the parking lot or other proposed structures, roads, or project-related development. **Mitigation Measure Biology – 8.2b: Exposed Ditch Setback.** The exposed ditch situated between the North Access Road and the proposed visitor's parking lot where the headwall, culvert, and willow are present, shall have a minimum 5-foot buffer setback from the parking lot or other proposed structures, roads, or project-related development.	Less Than Significant
IMPACT 8.3: Loss of Wildlife Habitat	Less than Significant	None required	Less than Significant

Impact	Significance	Mitigation Measures	Impact after Mitigation
IMPACT 8.4: Conflict with Local Policies or Ordinances	Potentially Significant	**Mitigation Measure Biology – 8.4a: Standard Tree Protection Measures.** The following standard tree protection measures should be implemented to protect retained trees on or immediately adjacent to the site during project construction: • **Tree Avoidance.** The proposed Project shall avoid any impacts on as many trees as feasible. The proposed Project shall also incorporate placement of tree protection fencing outside of the drip line of retained trees. • **Tree Protection Zone.** All on-site trees to be retained shall be enclosed within a Tree Protection Zone (TPZ) in order to prevent direct damage to the trees and their growing environment. The TPZ (as shown on the figure in the Tree Survey Report) will be constructed from blaze orange barrier fencing supported by metal "T rail" fence posts. The TPZ will be placed at a distance that is at or outside of the drip lines of retained trees to the extent feasible based on the limits of the area to be graded. TPZ fencing will be installed before site preparation, construction activities, or tree removal/trimming begins and will be installed under the supervision of a qualified arborist. • **Use of Heavy Equipment.** Heavy machinery will not be allowed to operate or park within or around areas containing retained trees (unless these areas are currently a paved surface). If it is necessary for heavy machinery to operate within the dripline of retained trees, then a layer of mulch or pea gravel at least 4 inches in depth will be placed on the ground beneath the dripline. A ¾-inch sheet of plywood will be placed on top of the mulch. The plywood and mulch will be removed once	Less Than Significant

Impact	Significance	Mitigation Measures	Impact after Mitigation
		construction is complete. • **Storage of Construction Materials and Debris.** Construction materials (e.g., gravel, aggregate, heavy equipment) or project debris and waste material will not be placed adjacent to or against the trunks of retained trees. Furthermore, no poison or other substance harmful to trees shall be allowed to lie, leak, pour, flow, or drip upon or into the soil within the dripline of any tree located within the County ROW. • **Incidental Damage to Protected Trees.** The attachment of wires, nails, tacks, staples, advertising posters or signs, and ropes to any County ROW tree is strictly prohibited. This restriction is not intended to apply to staking or other material used to secure a tree. • **Trimming.** Although no specific branch or branches are recommended for removal from retained trees, tree trimming may be required to allow the movement of construction machinery. • Unless exempted by the Public Works Agency Director in writing in the encroachment permit or otherwise, removal of any tree located in the County ROW for which an encroachment permit is required shall be performed by a contractor holding a valid license of the appropriate classification as described by the California Business and Professions Code and such other additional valid license(s) required under federal or State law to do the proposed work. In addition to the requirements established by the Public Works Agency Director, the licensed contractor shall be familiar with International Society of Arboriculture pruning guidelines and shall comply with these guidelines established by their publication, *Best Management Practices, Tree Pruning*.	

Impact	Significance	Mitigation Measures	Impact after Mitigation
		• All branches to be removed will be pruned back to an appropriate sized lateral or to the trunk by following proper pruning guidelines. • All trimming will be conducted by or under the supervision of a certified arborist. removed reduce compaction of the soil within the dripline. The plywood and mulch will be removed once construction is complete. **Mitigation Measure Biology – 8.3b: Replacement of Trees within the Alameda County Right-of-Way or Elsewhere on the Project Site.** Five mana gum [*Eucalyptus viminalis*] trees that are protected by the Alameda County tree ordinance may be impacted by the Project. All impacted trees within the County ROW or trees within the Project Site that must be removed to accommodate the Project will be mitigated at a 1:1 replacement ratio by planting the same tree species that was removed at a location to be determined through consultation with the Alameda County Public Works Agency Director.	Less than Significant
Transportation			
IMPACT 9.1: Increased Traffic on Local Roadways and Intersections	Less than Significant	None required	Less than Significant
IMPACT 9.2: Conflict with an applicable congestion management program, including, but not limited to level of service standards and travel demand measures, or other standards established by the county congestion management agency for designated roads or highways.	Less than Significant	None required	Less than Significant
IMPACT 9.3: A Substantial Increase in Hazards Due to a Design Feature or Incompatible Uses	Less than Significant	None required	Less than Significant
IMPACT 9.4: Result in inadequate Emergency Access	Less than Significant	None required	Less than Significant

Impact	Significance	Mitigation Measures	Impact after Mitigation
IMPACT 9.5: Conflict with adopted policies, plans or programs regarding public transit, bicycle, or pedestrian facilities, or otherwise decrease the performance or safety of such facilities.	Less than Significant	None required	Less than Significant
Noise			
IMPACT 10.1: Noise and Land Use Compatibility	Potentially Significant	**Mitigation Measure Noise – 10.1: Assure Acceptable Interior Noise Levels.** The following mitigation shall be included in the Project's design to maintain interior noise levels at or below 45 dBA L_{dn}: Residential units within 200 feet of the center of Fairmont Drive shall be provided with forced-air mechanical ventilation, so that windows can be kept closed at the occupant's discretion to control noise.	Less Than Significant
IMPACT 10.2: Vehicular Traffic Noise Increase	Less than Significant	None required	Less than Significant
IMPACT 10.3: Operational Noise Increases	Potentially Significant	**Mitigation Measure Noise – 10.3: Performance Criteria for Mechanical Equipment.** Mechanical equipment shall be designed so that noise levels shall not exceed 50 dBA L_{eq} at the property lines of the Project site adjoining noise-sensitive land uses.	Less Than Significant
IMPACT 10.4: Construction Noise	Less than Significant	None required	Less than Significant
Air Quality and Greenhouse Gas Emissions			
IMPACT 11.1: Construction Period Dust, Emissions, and Odors	Potentially Significant	**Mitigation Measure Air Quality/GHG – 11.1: Basic Construction Management Practices.** The Project shall demonstrate proposed compliance with all applicable regulations and operating procedures prior to issuance of demolition, building or grading permits, including implementation of the following BAAQMD Basic Construction Mitigation Measures. • All exposed surfaces (e.g., parking areas, staging areas, soil piles, graded areas, and unpaved access roads) shall be watered two times per day. • All haul trucks transporting soil, sand, or other loose material off-site shall be	Less Than Significant

Impact	Significance	Mitigation Measures	Impact after Mitigation
		covered. • All visible mud or dirt track-out onto adjacent public roads shall be removed using wet power vacuum street sweepers at least once per day. The use of dry power sweeping is prohibited. • All vehicle speeds on unpaved roads shall be limited to 15 miles per hour. • All roadways, driveways, and sidewalks to be paved shall be completed as soon as possible. Building pads shall be laid as soon as possible after grading unless seeding or soil binders are used. • Idling times shall be minimized either by shutting equipment off when not in use or reducing the maximum idling time to 5 minutes (as required by the California airborne toxics control measure Title 13, Section 2485 of California Code of Regulations). Clear signage shall be provided for construction workers at all access points. • All construction equipment shall be maintained and properly tuned in accordance with manufacturer's specifications. All equipment shall be checked by a certified mechanic and determined to be running in proper condition prior to operation. • Post a publicly visible sign with the telephone number and person to contact at the Lead Agency regarding dust complaints. This person shall respond and take corrective action within 48 hours. The BAAQMD's phone number shall also be visible to ensure compliance with applicable regulations.	
IMPACT 11.2: Operational Emissions	Less than Significant	None required	Less than Significant
IMPACT 11.3: Carbon Monoxide	Less than Significant	None required	Less than Significant
IMPACT 11.4: Construction-Period Exposure of Sensitive Receptors	Less than Significant	None required	Less than Significant
IMPACT 11.5: Operational-period Exposure of Sensitive Receptors	Less than Significant	None required	Less than Significant
IMPACT 11.6: Increased Greenhouse Gas Emissions	Less than Significant	None required	Less than Significant

Impact	Significance	Mitigation Measures	Impact after Mitigation
Hazards and Hazardous Materials			
IMPACT 12.1: Hazard Related to Routine Transport, Use or Disposal of Hazardous Materials	Potentially Significant	**Mitigation Measure Hazards – 12.1: Safe Removal of Asbestos During Demolition.** The California Health and Safety Code requires that employees and contractors working in buildings constructed before 1979 and known to include asbestos-containing materials are notified of their presence. Demolition of existing Camp Sweeney buildings should be undertaken by contractors equipped and trained in the safe removal of asbestos-containing materials. This would reduce the health risks of asbestos containing materials during demolition to a level of less than significant.	Less Than Significant
IMPACT 12.2: Hazard Related to Reasonably Foreseeable Upset and Accident Conditions Involving the Release of Hazardous Materials	Less than Significant	None required	Less than Significant
Public Services			
IMPACT 13.1: Indirect Effects on Public Services	Less than Significant	None required	Less than Significant
IMPACT 13.2: Need for Additional Facilities to Provide Adequate Fire Protection Services, Emergency Medical Response Services and Hazardous Materials Response Services	Less than Significant	None required	Less than Significant
IMPACT 13.3: Need for Additional Facilities to Provide Adequate Police Services	Less than Significant	None required	Less than Significant
IMPACT 13.4: Need for Additional Facilities to Provide Adequate School Services	Less than Significant	None required	Less than Significant
IMPACT 13.5: Need for Additional Facilities to Provide Adequate Parks and Recreation Services	Less than Significant	None required	Less than Significant
IMPACT 13.6: Need for Additional Facilities to Provide Adequate Solid Waste Services	Potentially Significant	**Mitigation Measure Public Services – 13.6a: Demolition Debris Recycling.** Demolition of the existing Camp Sweeney buildings and facilities should include a plan to capture as much material as feasible and recycle it for other uses. Concrete and asphalt should be reused as part of the construction of building slabs	Less than Significant

Impact	Significance	Mitigation Measures	Impact after Mitigation
		or parking lots at the new facility. Asbestos disposal and other Class I or II hazardous wastes would be disposed of in accordance with Bay Area Air Quality District and Department of Toxic Substance Control requirements, as appropriate. **Mitigation Measure Public Services – 13.6b: Waste Reduction and Diversion.** The Alameda County Probation Department, in cooperation with the County's GSA, should prepare a plan that demonstrates good faith efforts at diverting at least 50 percent of the solid waste generated by the new facility from landfill disposal via waste reduction and recycling.	
IMPACT 13.7: Need for Additional Facilities to Provide Adequate Library Services	Less than Significant	None required	Less than Significant
Utilities			
IMPACT 14.1: Availability of Water Supplies to Serve the Project from Existing Entitlements and Resources	Less than Significant	None required	Less than Significant
IMPACT 14.2: Need for Additional or Expanded Wastewater Treatment and or Disposal Facilities to Provide Adequate Service	Less than Significant	None required	Less than Significant
IMPACT 14.3: Need for Additional or Expanded Wastewater Collection Facilities to Provide Adequate Service	Less than Significant	None required	Less than Significant
IMPACT 14.4: Need for Additional Facilities to Provide Adequate Storm Drainage Services	Less than Significant	None required	Less than Significant
IMPACT 14.5: Increased Demand for Electrical, Gas and Telecommunication Services	Less than Significant	None required	Less than Significant
Cultural and Historic Resources			
IMPACT 15.1: Disturbance of Previously Undisturbed Archaeological Resources, Paleontological Resources and/or Human Remains	Potentially Significant	**Mitigation Measure Cultural – 15.1: Halt Construction/Assess Significance of Find.** Prior to the initiation of ground-disturbing activities, the County of Alameda shall inform all supervisory personnel and all contractors whose activities may have subsurface soil	Less than Significant

Impact	Significance	Mitigation Measures	Impact after Mitigation
		impacts of the potential for discovering archaeological resources, paleontological resources and/or human remains and of the procedures to be followed if these previously unrecorded cultural resources are discovered. These procedures shall include: • halting all ground-disturbing activities within 100 feet of the area where a potential cultural resource has been found; • notifying a qualified archaeologist of the discovery; and • following a treatment plan prescribed by the appropriate professional if the cultural resource is deemed significant, in accordance with federal or state law. The County of Alameda shall retain an on-call archaeologist to periodically review the excavation work, assess the significance of the potential cultural resource and prescribe a treatment plan for it. The archaeologist will consult with a paleontologist as required. The archaeologist shall report any finds in accordance with current professional protocols. The archaeologist shall meet the Professional Qualifications Standards mandated by the Secretary of the Interior and the California Office of Historic Preservation. In the event that any human remains are uncovered at the Project site during construction there shall be no further excavation or disturbance of the site or any nearby area until after the Alameda County Coroner has been informed and has determined that no investigation of the cause of death is required, and (if the remains are determined to be of Native American origin) the descendants from the deceased Native American(s) have made a recommendation to the person responsible for the excavation work, for means of treating or disposing of, with appropriate dignity, the human remains and any associated grave goods as provided in Public Resources Code	

Impact	Significance	Mitigation Measures	Impact after Mitigation
		Section 5097.98.	
IMPACT 15.2: Loss of Historic Resources Resulting from the Demolition of Existing Camp Sweeney	Less than Significant	None required	Less than Significant

Please refer to the individual chapters for a discussion of the environmental setting, potential impacts, and recommended mitigation measures for the proposed Project.

CUMULATIVE IMPACTS

Development of the proposed Project would be expected to contribute to environmental effects that occur as a result of area-wide development and operations activity, including housing, commercial, industrial, transportation and other governmental uses. For example, the project would contribute to the air pollution generated within the region. Depending on the level of construction activity taking place concurrently near the Project site, this contribution would be cumulatively considerable during, site preparation and construction unless measures to effectively control dust and construction vehicle emissions are implemented. Project-related noise effects during construction would also be considered cumulatively considerable on a temporary basis, depending on the level of construction activity nearby and the extent to which noise reduction measures can be effectively implemented. Following construction, facility operation could be expected to result in cumulatively considerable project-related contributions to vehicle traffic on roadways in the vicinity, which in turn could result in cumulatively considerable project-related contributions to air pollution within the region. Although development of the Project would be expected to result in an incremental increase in the demand for public services and utilities, the site is located within an urban area where these services and utilities can be provided without the need for new facilities or infrastructure. The Project's increase in demand thus would not be a cumulatively considerable environmental effect. See **Chapter 17** of this EIR for the site-specific discussions of Project-related cumulative effects.

GROWTH INDUCEMENT

The proposed Project is intended to address documented needs for improved facilities, and would not induce substantial population growth. Development of the proposed site would be consistent with overall land use plans for the area. The site is located in an urban area with adequate infrastructure to meet project-related demands for services and therefore no substantial infrastructure improvements would be required which could induce growth in the area. Any increased staffing employment to serve the proposed Project would be relatively small in comparison to the overall level of activity in the vicinity. New employees needed to serve at Camp Sweeney would be drawn primarily from the existing labor supply serving these County functions, and very few if any new housing would be required to serve new employees. Considered in the context of Alameda County and the Project location, the Project does not represent the introduction of large employment or economic generators. However, the overall trend in the region is toward increased traffic congestion, a lack of affordable housing, and increased service demands that could outstrip the ability of cities and other agencies to provide for all of the long-term

growth within and beyond the nine-County San Francisco Bay Area. Therefore, there is the potential for significant cumulative growth-inducing impacts. See **Chapter 17** of this EIR for the discussion of Project-related effects related to growth inducement.

AREAS OF CONTROVERSY

Controversy expressed during the initial planning activity and scoping process for the proposed Project focused on the following issues:

- Project Need: the need for the project is discussed in Chapter 3, under "Introduction and Project Overview;"
- Land Use: potential land use conflicts and related impacts to the nearby residential area are discussed In Chapter 4;
- Visual Impacts and Light and Glare: impacts related to light and glare and other visual considerations due to the proximity of the proposed Project to the nearby residential area are discussed in Chapter 5;
- Biological Resources: comments included concern that the Project would adversely affect nesting birds; this issue is addressed in Chapter 8;
- Geotechnical and Seismic Risks: geotechnical seismic hazards are discussed in Chapter 6;
- Noise: impacts related to construction and operational noise are discussed in Chapter 10;
- Air Quality: impacts related to construction and operational dust and pollutant emissions are discussed in Chapter 11; and
- Alternatives; alternatives to the proposed Project are discussed in Chapter 16.

This EIR provides information about project alternatives which will be used by the decision-makers in determining an appropriate course of action. Other factors that may influence those decisions include such things as total cost, whether program objectives are fully met, ability to implement the alternative in a timely manner, and others. The selection will be made by the County Board of Supervisors in its consideration of the proposed Project and the Project Alternatives and through the adoption of CEQA Findings.

3

PROJECT DESCRIPTION

INTRODUCTION AND PROJECT OVERVIEW

This chapter describes the Project location, the existing conditions and uses at the Project site, the design and related details of the proposed Project and the Project objectives.

Site Location

The Camp Sweeney Replacement Project would be located at 2400 Fairmont Drive, just off Interstate 580 (I-580) in an unincorporated area of Alameda County in the hills above and adjacent to the City of San Leandro, California (**Figure 3.1**). The site is within Alameda County's 206-acre area Fairmont Campus (**Figure 3.2** and **Figure 3.3**) Since the mid-1800s, the Fairmont Campus has served as an important locational resource for Alameda County's public health, social service and criminal justice facilities and institutions. The Fairmont Campus currently includes the new Juvenile Justice Center (developed in 2007), the existing Camp Sweeney campus (developed 1957–1958), the Las Vistas Training Center (developed in 1958), the General Services Agency's Building Maintenance Department operation center (1996), the Fairmont Hospital, and the John George Psychiatric Hospital,[1] as well as several smaller structures that offer a range of social services.

Existing Camp Sweeney Program

Camp Sweeney is a minimum security residential program for adolescent males ranging in age from 15 to 18 who have been adjudicated by the Juvenile Court for minor non-violent criminal offenses and assigned to the facility for a 6- to 12-month placement. The facility is administered by the Alameda County Probation Department in partnership with the Alameda County Office of Education, the Alameda County Health Care Services Agency, local community-based service providers, and supportive volunteers. The overall goal of Camp Sweeney is to return each minor to his community as a positive and productive citizen.

Existing facilities at Camp Sweeney consist of six buildings, including an administration building, a dormitory, a kitchen and dining facility, an educational classroom building, and a multi-purpose recreation building. A free-standing gymnasium building, the only remaining structure from the former Juvenile Hall campus, is near the Camp Sweeney campus and serves Camp Sweeney youth for athletic activities (basketball, volleyball, boxing, etc.). Open spaces at the campus site include outdoor fields for athletic activities including soccer, basketball, baseball, and other activities.

[1] Fairmont Hospital and the John George Psychiatric Pavilion are both components of Alameda County Medical Center. Fairmont Hospital was originally established in 1864 as the Alameda County Infirmary and has been providing rehabilitation services to County residents since the 1920s (Castro Valley General Plan, p. 8-33). Recent additions or upgrade to the Fairmont Hospital date to 1956.

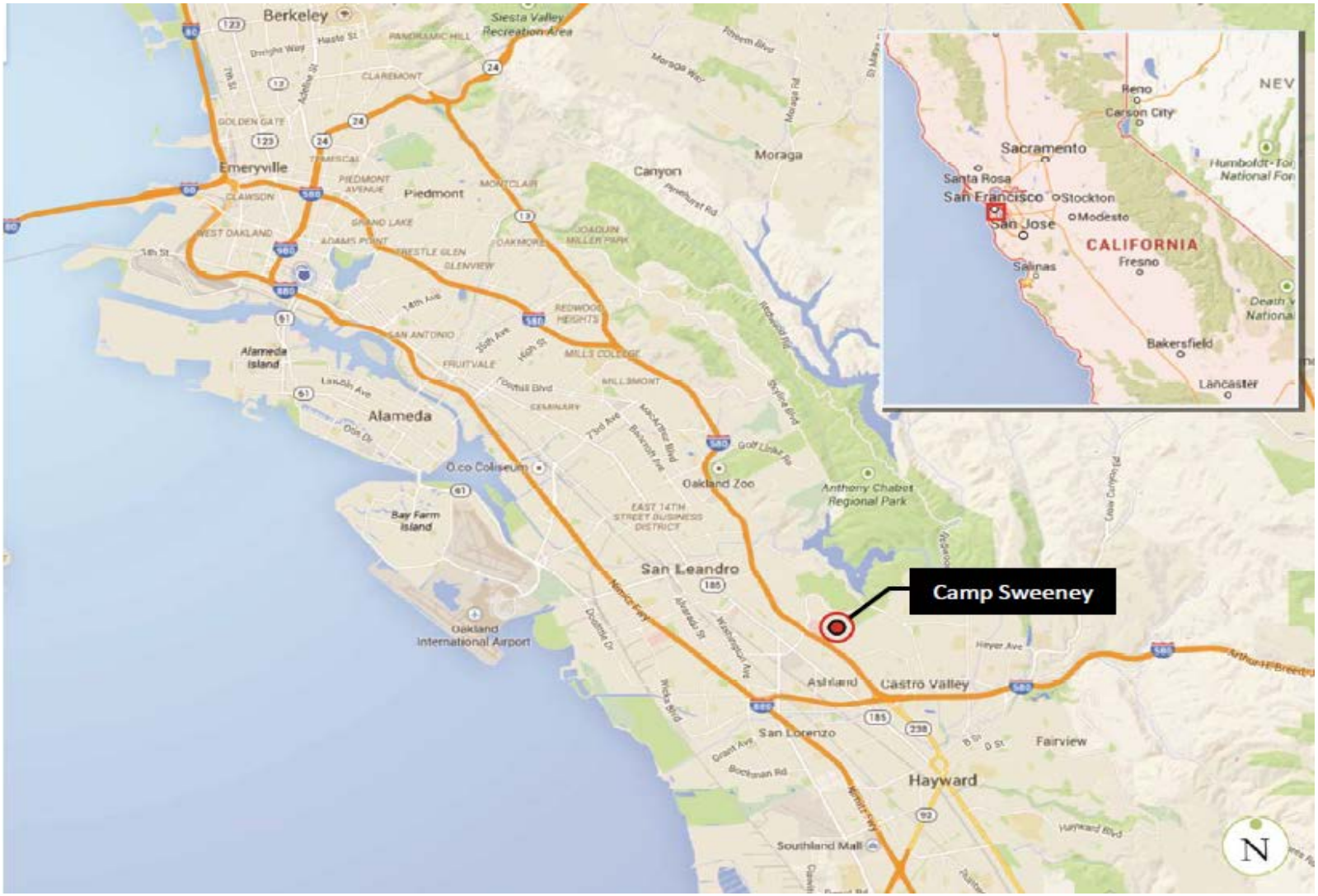

Figure 3.1. Project Location

Figure 3.2. Fairmont Campus and Institutional Uses

Key

1. Interstate 580	7. Quest Academy
2. Fairmont Drive	8. Snedigar Cottage/ GSA Building Maintenance Department
3. Existing Camp Sweeney	9. Hillcrest Knolls Residential Community
4. Project Site	10. John George Psychiatric Pavilion
5. Juvenile Justice Center	11. Fairmont Hospital
6. Las Vistas Training Facility	

Figure 3.3. Site Context

Key

1. Project Site	6. Quest Academy
2. Existing Camp Sweeney	7. Snedigar Cottage/ GSA Building Maintenance Department
3. Juvenile Justice Center	8. Hillcrest Knolls Residential Community
4. Las Vistas Training Facility	9. Fairmont Drive
5. North Access Road	10. South Access Road

Origins of the Project

During the development of the new Juvenile Justice Center, Probation Department staff noted three pressing concerns related to Camp Sweeney:

(1) Serious safety issues caused by structural deterioration and the critical need for retrofitting of the existing facilities; structural and seismic issues had begun to erode Camp Sweeney security, heightening concerns for resident and community safety.

(2) Camp Sweeney's residential population was drastically shifting toward more high-risk youth whose experiences and behaviors were an increasing challenge to the effectiveness of existing programs, minimizing rehabilitation and contributing to recidivism.

(3) The population of female offenders was growing and post-adjudication residential facilities to serve them were absent.

To address these concerns regarding the deficiencies with Camp Sweeney facilities, County staff and elected officials initiated actions which resulted in the proposed Project described herein.

In June 2008, the Alameda County Board of Supervisors authorized a Needs Assessment to evaluate the current and future safety and security requirements of Camp Wilmont Sweeney. The key findings of the 2008 Needs Assessment, as summarized in its Executive Summary are as follows:

Camp is an aged, obsolete facility that needs earthquake retrofitting, and it should be replaced as soon as feasible. Specifically, the needs assessment includes the following:

- *Camp Wilmont Sweeney, built in 1957, is inappropriately designed for secure care, in a condition which does not merit renovation, and presents unusual liability to the community and County. Camp Wilmont Sweeney should undergo planning for replacement.*
- *Camp Sweeney, "grand-fathered" as a Juvenile Camp, does not comply with minimal standards and criteria of the California Title 24 statute. Several required standards for Fire Safety, Health and Sanitation, Sleeping Areas for General and Disabled, Medical and Mental Health, Acoustics, and Security are deficient.*
- *The current physical plant does not support a therapeutic evidence-based program. Best practices for juvenile treatment call for facilities that support small groups to enhance personal contact and involvement of staff with youth.*
- *The current site is not secure and allows frequent juvenile walk offs. It is not designed for the more serious offenders which are increasingly housed at this facility as a result of Senate Bill (SB) 81. Additionally, there is no housing for the female population which statistically is the highest growth population within the County.*

While the immediate challenges of Camp Wilmont Sweeney could be addressed through retrofit of existing facilities or reconstruction with a minimal increase in the number of beds, the county's needs could be best served by construction of a new 150 bed facility that includes 30 beds for females and serious offenders typically placed at the Division of Juvenile Justice.[2]

[2] Carter Goble Lee, *Alameda County Juvenile Facilities Needs Assessment Final Report*, December 11, 2008, p. ES-1.

Additional specific deficiencies noted in the Needs Assessment and repeated in the County's funding application include the following:

> *There are no single occupancy units for Medical and Mental Health, Infirmed Care, or High-risk care. The existing Camp does not have a Reception or Intake Admissions Area, locked Holding or Safety Room. The dormitory area does not have sufficient dayroom space. Dayroom activities occur in the site's least structurally sound building, (the recreation building) located approximately 300 feet across the compound. The facility school has four small classrooms with no safety communications systems to respond to emergencies, and no area for special needs programming or vocational training. The building that is in the worst physical condition is the Recreation building, it does not provide adequate space for physical recreation, and it has been cited for demolition. All buildings are in conditions that do not merit reinvestment for renovation. Two buildings, the dormitory and the cafeteria, sit atop the Hayward Fault and present unique potential for continued significant deterioration. The building shows signs of structural failure, with cracks in the foundation and obvious shifting of the ground pod….*
>
> *The current facility is only "staff-secure" with 24-hour coverage. There is no intercom system, no security cameras, insufficient lighting, and no secured perimeter fencing, Most Camp escapes occur in the evening when visual monitoring is difficult. The fire alarm and suppression systems are antiquated and require updating to comply with building codes. The fire alarm is old and replacement parts are difficult to locate. The Camp is situated on a hillside surrounded by trees and wild grasses, risk of fire during summer and fall is great. The facility's alarm and suppression system is inadequate to assure the safety of youth and staff. Under current circumstances, building and site video monitoring equipment is desperately required. Additionally, the Camp does not comply with Americans with Disabilities Act mandates.*
>
> *Minimal medical facilities are available at the existing Camp compliant with Title 24 for medical minor diagnosis and treatment. As such, Camp youth receive care at the adjacent* Juvenile Justice Center *clinic operated by Children's Hospital and Research Center at Oakland, which provides physical exams on admitted youth at the JJC and Camp Sweeney. As required by Title 15, the Camp has a Designated Health Administrator; however, all medical cases are referred to the Infirmary in the* Juvenile Justice Center. *Without the health clinic at the adjacent* Juvenile Justice Center, *Camp Sweeney would not be capable of meeting minimal standards for healthcare services.*[3]

The County's application for funding included a description of the County's approach to rehabilitation of juvenile offenders:

> ***1. Alameda County's role in the rehabilitation of juvenile offenders***
>
> *The role of the Alameda County Juvenile Justice System is to provide for public safety, prevent juvenile crime, and rehabilitate juvenile offenders. This role is carried out through five core strategies:*
>
> *(1) Provide safe and nurturing environments to those in care while striving to keep families intact;*
>
> *(2) Maintain levels of protection, supervision, and custody commensurate with public safety and legal mandates;*
>
> *(3) Provide community-focused programs to prevent and resolve fundamental problems that create criminal behavior;*

[3] 2007 Local Youthful Offender Rehabilitative Facility Construction Funding Program Proposal Form, signed by Donald Blevens, Chief Probation Officer, Alameda County Probation Department, January 1, 2009.

(4) Strengthen community and public sector resources through collaboration in order to identify and respond to families and youth at the highest risk of involvement with the juvenile justice system; and

(5) Structure intervention strategies on empirically proven evidence-based models.

The operational design of Camp Sweeney centers on best practices in residential treatment for youth in the juvenile justice system by engaging in proven strategies that reduce delinquent behavior and enhance safety for victims and the community. Probation staff pursued an extensive literature and best practices review to identify evidence-based, cognitive-behavioral programs that help youth recognize and modify unhelpful or destructive patterns of thinking, and integrated treatment approaches that focus on personal development of new skills and competencies; enhanced education/vocational and literacy skills; redirection of their life through positive engagement with staff; improved family relations; and positive reinforcement for pro-social behaviors and attitudes—rather than punishment and isolation. In designing the methodology for Alameda County, consensus was reached on the use of group systems, universal case management, and a level system in which youth develop individual roadmaps to chart their journey and progress. To ensure the efficacy of service delivery, there will be continuous development for staff to ensure that staff interactions with youth will be culturally competent, gender-responsive, trauma-informed, and age-appropriate.

Proposed Replacement Project

In February 2009, Alameda County was awarded grant funding under SB 81 (2007; "Juvenile Justice Realignment" bill) from the California Board of State and Community Corrections for the construction of a new Camp Sweeney. The original concept was for the facility to be "camp-like" and to include 150 dormitory-style beds for 90 boys, 30 girls and a secured 30 bed facility for Department of Juvenile Justice youth. The design of the project has evolved from the time of the original grant award, reducing the overall size to the current plan which would provide a total of 120 dormitory-style beds for 64 males and 32 females and a secured 24-bed Special Programming building.

The proposed Project includes the development of new facilities on the nearby vacant 10-acre site within the Fairmont Campus property (see **Figure 3.3**). Once the new campus is in operation, the existing Camp Sweeney buildings would be removed and the site would be restored to its approximate original condition.

The proposed Camp Sweeney Replacement Project would have two main areas: the Upper Field Area (site of the former Juvenile Hall, since demolished, except for the gymnasium) which would be used for baseball, soccer and other athletic activities, and the Campus Site, closer to Fairmont Drive, where the new structures would be located. The Project site is bordered across Fairmont Drive by Hillcrest Knolls—a single-family residential neighborhood on the downhill slope, screened by mature trees and other plantings. The Alameda County Sheriff's Office Eden Substation lies south of the Project site and adjacent to I-580 between 150th Avenue and Fairmont Drive.

PROJECT OBJECTIVES

1. To produce a new Camp Sweeney campus capable of serving both male and female youth in a safe and secure environment with an occupancy capacity of 120 beds consistent with the Needs Study, including facilities for 64 males, 32 females and a 24-bed Special Programming building.
2. To retain close physical proximity to the Juvenile Justice Center and its juvenile court facilities for program operating efficiencies and service interdependencies.

3. To create a campus setting that would be "campus-like" in feeling and atmosphere, with small-scaled buildings of one and two stories, maximum.
4. To create a physical environment through careful site planning and design, creating positive opportunities for staff to work with youth and provide guidance and counseling in small group settings that promote the Program's behavioral and educational goals.
5. To create an environment that projects the rehabilitative goals of positive and lasting change in the lives of the youths and avoids the look and feel of a detention/ incarceration facility.

DETAILED PROJECT DESCRIPTION

Site Plan Overview

Figure 3.4, Site Plan and **Figure 3.5**, Illustrative Landscape Plan, show how the buildings would be arranged around an open center landscaped courtyard spine to meet the small-scale "camp~~us~~-like" design concept consistent with the programmatic requirements of Camp Sweeney. This linear open space area between the buildings would be heavily used for recreation, group meetings, and educational purposes that are integral to the Camp Sweeney program. Pathways would connect the buildings and provide pedestrian and electric cart access to all parts of the site by building maintenance and program staff.

Buildings would be laid out with separate boys and girls pedestrian circulation routes. The girls' housing would be located so the girls can access administration functions, the gym and food service areas and their classroom without crossing paths routinely used by boys. The buildings and site topography are used to separate the genders without the need for internal fencing; only the Special Programming Unit would have fencing all the way around the indoor and outdoor spaces.

The Administration building would be located at the north end of the campus site adjacent to the main entry point and accessible parking. Visitors and community groups would enter through the Administration building and would be screened there. The intake and discharge of youths would also be located near the site entry point.

The other common-use functions would include the Food Services building, the Programs building (classrooms), and the gym; these would be grouped around and open onto the common outdoor area. The Food Services building would have a loading area for deliveries located close to the main entry gate.

The Girls' Residence would be nearest the Administration building. The three Boys' Residence buildings would be located in the southern third of the campus; Buildings 5 and 6 would be integrated among the other campus buildings and Building 7 (Special Programming) would be separate, with its own outdoor recreation area and secured access from Fairmont Drive via the South Access Road.

Key:
1. Administration Building
2. Girls' Residence
3. Food Services (Ground Floor) And Gym (2nd Floor)
4. Programs Building
5. Boys' Residence
6. Boys' Residence
7. Boys' Residence (Special Programming)
8. Intake Parking
9. Visitor Parking
10. Staff Parking
11. New Transformer & Diesel Generator
12. Fire Access Road
13. Athletic Fields
14. Existing Gym Building
15. New South Access Road
16. Existing North Access Road
17. Trash Enclosure
18. New Sidewalk
19. Site Fence
20. Visitor Drop-off
21. Potential Wetland
22. 20' Wetland Setback
23. 5' Construction Setback

Figure 3.4. Site Plan

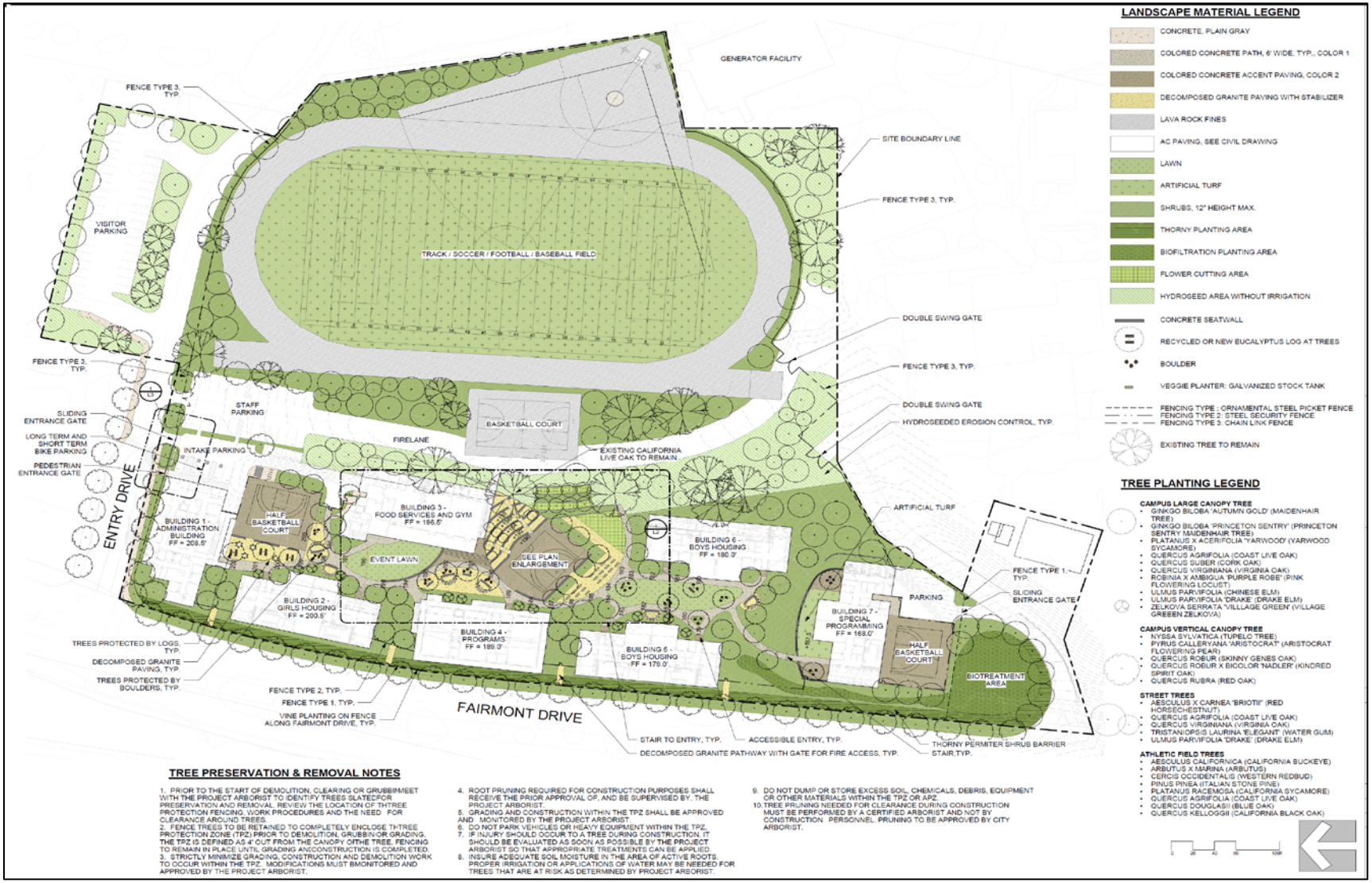

Figure 3.5. Illustrative Landscape Plan

Building 7 (Special Programming) would be designed to house and serve male youth who are transitioning out of the Juvenile Justice Center, but who are considered not yet ready to return to their communities. Like all other youth assigned to Camp Sweeney, those in building 7 would be expected to stay for a period of 6 to 12 months. Because the boys in building 7 would have had a history of more violent criminal activity compared with others at Camp Sweeney, building 7 would operate under more intense security provisions than the rest of Camp Sweeney.

The outdoor common area of the campus would be connected via a pedestrian path and stairs to the upper athletic field area.

Table 3.1 provides the square footage for each of the proposed Camp Sweeney buildings.

TABLE 3.1: CAMP SWEENEY AREA CALCULATIONS

Building Number and Name	Number of Levels	Components	Gross Square Footage
Building 1 – Administration	2	Intake and Discharge Administration and Staff Services	13,188
Building 2 – Girls' Residence	1	Medical Services and Counseling Residence with 32 beds	7,257
Building 3 – Food Services and Gym	2	Food Services/Dining Hall (1st floor) Gymnasium (2nd Floor)	15,843
Building 4 – Programs	2	Classrooms, Function and Meeting Rooms	14,959
Building 5 – Boys' Residence	1	Residence with 32 beds	7,257
Building 6 – Boys' Residence	1	Residence with 32 beds	7,257
Building 7 – Boys' Residence	1	Residence with 24 beds plus Administration and Food Service	6,997
Total			**72,758**

Source: Komorous-Towey Architects 2015

Site Access

As noted above, the primary entrance to Camp Sweeney would be via the North Access Road from Fairmont Drive at the northwest corner of the Project site. Intercom access to staff in the Administration Building would be provided at the vehicle and pedestrian gate entrance locations. All deliveries would come through the main gate control point and would proceed to the loading dock/staging area at the Food Services Building. A new, realigned access road would provide a separate and secure means of access to Building 7.

Topography

As illustrated in **Figure 3.6**, the site slopes down from north to south, dropping in excess of 50 feet from the point of entry from the North Access Road to the location of the new South Access Road. The sloping site provides a design challenge as the Camp Sweeney programs must accommodate many outdoor activities and provide small group meeting areas. The design concept creates several near-level areas interconnected by gently sloping and curving paths. These curves serve to increase the length of paths between the buildings and the various levels of the site and allow for a gentler slope, avoiding the need for ramps and railings, thereby creating more of an open site experience.

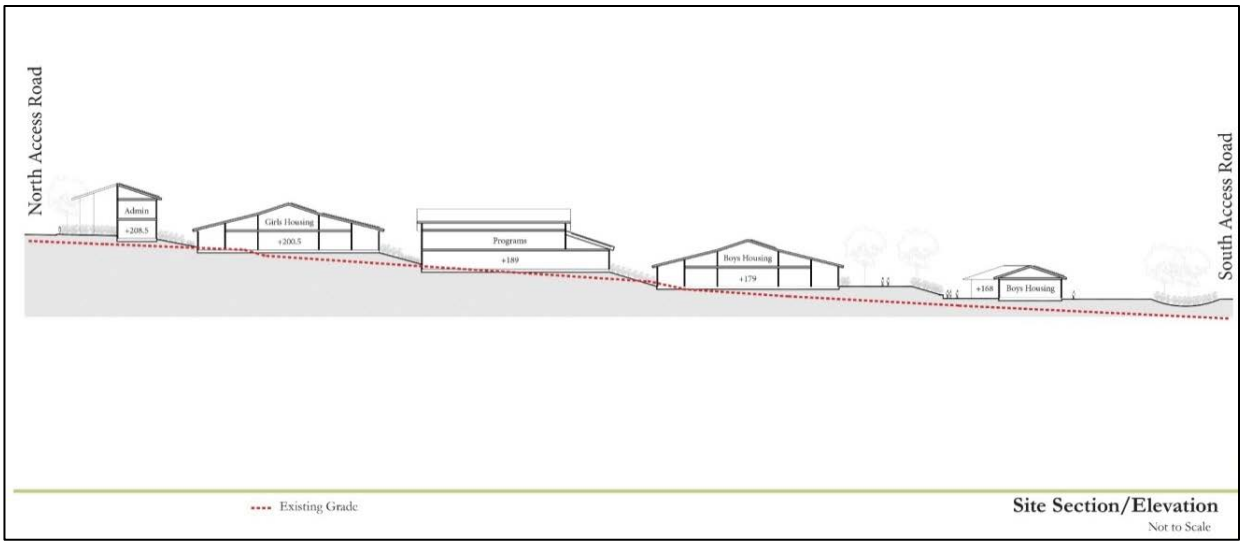

Figure 3.6. Cross Section Illustration of Site

Parking

The site would have three separate parking areas. One would be located immediately adjacent to the Administration building with five accessible parking stalls and a van loading area. Another secured area adjacent to the Administration building would provide 26 spaces for staff parking. The third parking lot, located north of the North Access Road and outside the security fence, would provide 46 spaces for visitors. Additionally, there would be approximately 5 parking spaces at the Special Programming building. A paved sidewalk would link the visitor parking lot to the existing shuttle bus stop and to the main pedestrian entry point. Additional short-term parking for vans would be provided in the backup space/area of the accessible stalls at the Administration building for drop-off and pickup of youth and visitors.

Ground Coverage

Consistent with the programmatic requirements of Camp Sweeney, the grounds would be as open as possible with maximum lot coverage by buildings limited to 40 percent of the site area, leaving 60 percent open for internal circulation (paths and access ways) and areas for outdoor classrooms and other activities.

Solid Waste

A central waste collection area would be located near the main vehicle entry by the Administration building and would provide 150-foot backup length for waste collection vehicles. Individual dumpsters for separated trash and recycling would be contained in weatherproof enclosures.

Site Security

The site would be secured with fencing around the entire perimeter, using different fencing concepts in different areas of the site. For example, a double line of fencing would be installed along Fairmont Drive, with the outer fence being placed at the site property boundary line and the inner fence consisting of the exterior walls of the buildings themselves and with secondary fences across the gaps

between buildings. All fencing would be 10 feet in height and would not use razor wire or other materials typically associated with correctional institutions. Chain link would be used only in the upper field area. Conceptual illustrations of the fencing concepts are indicated in **Figure 3.7**.

Figure 3.7. Illustrative Fence Concepts

The visitor parking lot would be outside the secured area; an intercom station located at the main vehicle entry and at the main pedestrian gate would allow visitors to call for door release and access.

Food Services

The Food Services building would not have a full-service kitchen, but would include kitchen facilities for preparing and serving meals and snacks. Consistent with current operating procedures, the majority of meals would be prepared offsite and delivered to Camp Sweeney for warming and serving. Kitchen facilities in the Food Services building would include commercial-grade gas and electric appliances. Youth breakfast, lunch, and dinner meals would be served in shifts. All dishes and utensils would disposable. There would be no youth restrooms in the Food Services building; youth would be escorted to and from the Food Service unit by staff for meals. Males in Building 7 would eat their meals in their building. The kitchen facilities could be used as a classroom for culinary instruction and could potentially be modified to become full service. An attached multi-purpose room would be used for various functions and visitation.

Outdoor Activities and Intramural Sports

Sports activities at Camp Sweeney would include track and field, basketball, soccer, volleyball, and softball, all intended to promote youth exercise, recreation, and organized intramural play. The upper field area would be developed as play fields as part of the Intramural Sports program. The campus site would have separate basketball courts for girls and boys. Other potential sport facilities, including a bocce ball court and chess boards, may also be provided.

Camp Sweeney youth would be eligible to participate in various sporting events and, consistent with current Camp Sweeney operating programs, would be able to compete against neighboring county youth camp and ranch programs. Use of the sports facilities and gymnasium could occur throughout the day; access and activities would be supervised.

Gymnasium

A new gymnasium would be located on a second floor of the Food Services building. A bridge would provide direct access from the gymnasium to the athletic fields. In addition to basketball and other sports, the gym could be used for larger presentations, graduations, shows, seminars, ceremonies, large meetings, group programs, and recruiting programs.

Programs Building

The site plan includes a Programs Building which would house the teaching functions and classrooms for Camp Sweeney youth. The Programs Building would be a two-story structure.

Consistent with current practice at the existing Camp Sweeney campus, the Alameda County Office of Education would continue to provide the educational program, which is geared to allow Youth to earn credits towards graduation or prepare to take the General Education Diploma. The educational program would operate Monday through Friday from 8:00 a.m. to 2:00 p.m., with a staff break in the morning and lunch at noon. Use of the classrooms would be allowed to continue until 8:00 p.m. The Programs building would also accommodate teaching staff and administration support functions with spaces for meeting rooms, copy area, private offices, and breakrooms. Classrooms would accommodate up to 17 students and there would be separate classrooms for female youth. All education functions for youth in the Special Programming Building would occur in the multi-purpose rooms within Building 7.

EXISTING SITE CONDITIONS

The portion of the project site adjacent to Fairmont Drive is currently paved with asphalt and used as a parking lot for other institutional uses located within the Fairmont Campus. East of the parking lot lies a mildly steep slope consisting of grassland that leads up to a flat area where the former Juvenile Hall complex of buildings once stood. With the exception of the gymnasium building, these buildings have been completely removed. The gymnasium continues to be used by current Camp Sweeney youth.

Geology/Soils

Extensive geotechnical and seismic investigations have been conducted at the site of the former Juvenile Hall and throughout the proposed Project site. The Hayward fault runs along the east side of the Project site with traces of the fault system found beneath the upper field area. Deep exploratory trenching and soil borings over several years of study have led geotechnical consultants to identify a seismically safe “build zone” which has governed the site planning process and resulted in the proposed placement of all new Camp Sweeney buildings along the western third of the 10-acre site.

While all proposed buildings would be clustered within the seismically safe “build zone,” the geotechnical studies have also determined that the soils beneath the proposed building sites consist of undocumented fills to a depth ranging from 1 foot to more than 20 feet. The fill material is highly variable and unacceptable structurally as the base for the proposed buildings. Geotechnical recommendations suggest excavation and removal of all undocumented fill material beneath the site down to the gabbro bedrock. After processing the excavated soil to remove wastes, organics or other inappropriate materials, the soil would be re-introduced in accordance with engineered lifts and compaction criteria. Once the major soil remediation is completed, final grading would create building

pads, roadways, parking areas, and pedestrian pathways, resulting in grades that closely resemble the current topographic profile of the site (see **Figure 3.6**). The grading plan is designed to balance cuts and fills to avoid import or export of material offsite.

South Access Road

The Project would realign and reconstruct the existing access driveway along the south end of the site. This is currently a one-way roadway, providing access to the Las Vistas facility, Quest Academy,[4] and the Snedigar Cottage/GSA Building Maintenance Department. Cars exiting from these facilities currently use the internal roadway at the east edge of the parking lots to reach the North Access Road at the north end of the Project site; from there they exit onto Fairmont Drive.

Under the proposed Project, the "South Access Road" would become a two-way roadway, providing continued access to the other nearby County facilities and also to the proposed Boys Residence Building 7. Vehicles using the South Access Road to exit would be limited to a right turn out restriction at Fairmont Drive because there is no break in the Fairmont Drive median at that point. The Project proposes to modify a portion of Fairmont Drive to construct a 150-foot-long vehicle stacking pocket at the existing median break at the North Access Road, allowing for safe U-turn movements at that point.

Fire Access

The main fire truck access would be from the edge of Fairmont Drive which is adjacent to five of the seven buildings planned for the site—buildings 1, 2, 4, 5 and 7—as shown in **Figure 3.4**. Fires at any of these five buildings could be addressed with a maximum of 150 feet of hose from trucks parked at the edge of Fairmont Drive. For buildings not located along Fairmont Drive, a new access driveway would be constructed along the east side of the site, providing access to the Food Services/Gym building and two of the Boys' Residences (buildings 6 and 7). Walkways and gates through the perimeter fencing would be provided for access by emergency personnel parked on Fairmont Avenue. New fire hydrants would be installed on Fairmont Drive, as required by the Fire Marshal.

Utility Demand

Water, sanitary sewer, storm drain, and natural gas services as well as other utilities are all available from Fairmont Drive or otherwise from existing on-site infrastructure. Water service is provided by East Bay Municipal Utility District (EBMUD). The Project would need separate potable, fire, and irrigation services. Sanitary Sewer is provided by the Oro Lomo Sanitary District in this area. A new sewer line to the existing main in Fairmont Drive would be constructed as part of the proposed Project.

Regarding stormwater, an existing storm drain line is located along the east side of Fairmont Drive to which the Project would direct and discharge storm water from the site. There is also an existing 60-inch diameter reinforced concrete storm drain culvert approximately 20 feet below the ground surface that runs through the middle of the Project site. Structures are allowed to be placed atop the culvert and there are no plans to relocate the culvert. Since the existing site is nearly 100 percent covered with impervious asphalt parking lots, the Project would result in a decrease of impervious surface and decreased stormwater flows from the site.

[4] The existing Quest campus is planned to be vacated.

The four existing joint utility poles that contain electrical, communications, and cable television utilities are located in an easement along Fairmont Drive, bisecting the Project site where buildings 1, 2, 4, 5, and 7 would be built. The overhead utilities would be relocated or placed below ground in conduits.

Storm Water Management Strategy

The Project is subject to regulatory design and performance criteria related to both the quality and quantity of storm water discharged from the site. The Project would integrate low impact development strategies to remove pollutants and reduce the quantity of stormwater before it enters the public storm drain system, all as required by the County's Clean Water Program. The drainage plan would use features such as pervious paving, bio-retention, and flow-through planters.

Landscape Plan

The landscape plan presented above (**Figure 3.5**) is a preliminary illustration of the concept intended for the Project. **Figure 3.8** and **Figure 3.9** illustrate landscape and drainage concepts that are intended to be applied for the Project, consistent with the storm drain requirements as discussed in Chapter 7, Hydrology and Water Quality.

Figure 3.8. Conceptual Design for Walkways

Figure 3.9. Suggested Landscape with Bio Filtration Features

Leadership in Energy and Environmental Design, Net-Zero, and Sustainable Design Goals

Alameda County intends that Camp Sweeney meet high standards of sustainability. In addition to a requirement that the project achieve a minimum level of Leadership in Energy and Environmental Design (LEED) Silver Certification, the County has set the goal of a Net-Zero energy Project.[5] The only exception to this is the natural gas used in the Food Services building for food preparation.

The design team has established detailed design criteria for the building envelope: walls, floors, roof, and windows. A preliminary LEED checklist indicates that the design would be within the anticipated scope and that LEED Platinum Certification is achievable beyond the Silver requirement. Achieving Net Zero requires the incorporation of substantial solar photovoltaic panels, both on the roofs of the buildings and over open parking areas. In addition to design features, the Project would comply with the County's standards for waste diversion and sustainable purchasing procedures.

Construction Schedule

Construction is anticipated to commence in April 2017 and be completed in December 2019, reflecting a total of 32 months of construction; the schedule will be updated as documentation progresses. The assumed phasing schedule would be as follows:

Grading and site preparation:	6 – 9 months
Building construction:	24 months

REQUIRED APPROVALS

A three-step approvals process is anticipated for the project, as follows.

a) County Certification of Environmental Compliance

The Alameda County Board of Supervisors at a noticed public hearing will be asked to approve the Project and certify the EIR, thereby completing the environmental review process as required by CEQA.

b) Alameda County Board of Education

Pursuant to the California Education Code Section 48645.6, the Alameda County Board of Education will be asked to review and comment on the project plans.

c) Technical Approvals

Alameda County and its third party plan check and permit reviewers will internally provide clearance and sign-off on plans related to grading and site excavation, construction and structural plans, mechanical, electrical, plumbing and other plans and specifications, including compliance with the C.3 provisions of the Alameda County Clean Water Program. This step will include providing a Notice of Intent (NOI) to the San Francisco office of the Regional Water Quality Control Board (RWQCB).

[5] A Net Zero-energy building is a building with zero net energy consumption, meaning the total amount of energy used by the building on an annual basis, is roughly equal to the amount of renewable energy created on the site or by renewable energy sources elsewhere.

c) County of Alameda – Final Project Approval

Implementation of the project through its final design and construction phases would involve on-going project management and oversight by the Alameda County GSA who will coordinate reviews and inspections by appropriate local agencies (e.g., Public Works Department, RWQCB) for compliance with adopted site grading, structural, electrical, mechanical, plumbing, building, drainage, and clean water standards and requirements throughout the construction process.

d) State of California Department of Public Works and California State Fire Marshal

e) Alameda County Fire Marshal – Chapter D

4

LAND USE AND PLANNING

ENVIRONMENTAL SETTING

The existing Camp Sweeney campus is located on a portion of the Fairmont Campus, a 206-acre holding owned by the County of Alameda and home to a number of health care and juvenile justice facilities. The site of the existing Camp Sweeney is bounded on the west, north, and east by Fairmont Drive and by the County of Alameda John George Psychiatric Pavilion, Fairmont Hospital, and related uses to the south. The site vicinity consists of rolling, generally open hilly terrain with heavily wooded areas upon which exist various institutional uses (see **Figure 3.3**), including the new Juvenile Justice Center, the existing Camp Sweeney, Las Vistas Facility, Quest Academy, and the Hillcrest Knolls neighborhood across Fairmont Drive from the Project site.

The John George Psychiatric Pavilion and Fairmont Hospital campus are adjacent to the south of the site, comprising a complex of many large to smaller scaled medical buildings spread around a sprawling campus, with substantial open land nearby.

The former Alameda County Animal Control Shelter is northeast of the site along Fairmont Drive.

The County Sheriff operates the Eden Substation at Foothill Boulevard and Fairmont Drive, near the I-580 interchange with 150th Avenue.

The open and hilly terrain of Lake Chabot Regional Park is further to the north and east, beyond the former Animal Control Facility buildings.

Proposed Site

The Project site consists of approximately 10 acres and two main areas: the upper field area and the campus site itself. The upper field area had been the site of the former Juvenile Hall which was demolished after the new Juvenile Justice Center (uphill and to the east) was completed in 2007. Original plans for the Camp Sweeney Replacement Project contemplated locating it on the upper field area. However, detailed geotechnical investigations undertaken after the Juvenile Hall buildings were removed documented the existence of subsurface seismic fault traces associated with the Hayward Fault, making it infeasible as the site for Camp Sweeney. Consequently, the upper field area is proposed for outdoor athletic activities only. The westerly third of the Project site, adjacent to Fairmont Drive, has been extensively studied for seismic safety considerations and determined to be safe for the proposed campus structures (see Chapter 6, Geology, Soils and Seismicity).

REGULATORY SETTING

Set forth below is an analysis of the Project's consistency with local general plan, zoning, and related policies. As a political subdivision of the State, the County is immune from local regulations. This immunity extends to local land use, zoning, and building regulations. Moreover, Government Code

Sections 53090-53096, which generally require local agencies to comply with the land use and building regulations of the county or city in which their territory is located, specifically excludes counties from this requirement. Therefore, the County of Alameda is not required to comply with land use, zoning, and building requirements otherwise applicable to the Project site, including those of Alameda County itself. Consequently, if the proposed Project is determined to be inconsistent with local land use, zoning, or building requirements, such inconsistency generally would not prevent implementation of the project.

Castro Valley Plan

The 206-acre Fairmont Campus, which includes the Project site, is in an unincorporated area under the jurisdiction of Alameda County, with principal land use policy direction given in the *Castro Valley Plan* (Alameda County 2012). The Castro Valley Plan is the land use and planning policy guide for public and private decisions affecting the development of the Castro Valley area, and is a portion of the County's General Plan. The Castro Valley Plan includes goals, objectives, principles, and implementation recommendations on land use, housing, open space, parks and recreation, safety and seismic safety, conservation of resources, noise, and circulation. As such, it addresses all issues required by law to be included in elements of a General Plan that pertain to the Planning Area.

The Castro Valley General Plan identifies the Fairmont Area as one of six Special Planning Areas and describes the Fairmont Area as follows:

Fairmont Area

The Fairmont Area comprises approximately 200 acres owned by Alameda County. Currently the area is the site of the Juvenile Justice Center, John George Hospital, Alameda County Medical Center, Sheriff's Department, George Mark Hospice, and other County facilities and community-based organizations. The development potential of more than 60 acres of the Fairmont Area is constrained by the Hayward fault, severe fire hazard potential, susceptibility to landslides and other environmental features such as riparian and grassland habitat areas.

POLICY RECOMMENDATIONS:

SPECIAL PLANNING AREAS GOAL

GOAL 4.10-1 *Develop specific plans or special guidelines to guide future development in areas that have significant remaining development potential and special environmental conditions.*

SPECIAL PLANNING AREAS POLICY

Policy 4.10-1 *Long-range Plans. Prepare or require specific plans, precise plans, master plans, or special design guidelines for the following areas:*

- *Madison-Common Area*
- *EBMUD Site*
- *John Drive Area*
- *Crow Canyon Road Area*
- *Jensen Road Area*
- *Fairmont Area*

SPECIAL PLANNING AREAS ACTIONS

Action 4.10-5 ***Fairmont Area****. Require preparation of a Master Plan that emphasizes the County's economic development opportunities in the Fairmont Area and also recognizes the location's environmental constraints*

Status

Alameda County has not undertaken the preparation of a Master Plan, as recommended above under Action 4.10-5. The only work by any agency of Alameda County involving sites within the Fairmont Campus is the current planning work related to the Camp Sweeney Replacement Project.

San Leandro General Plan

The Fairmont Campus is located outside of the San Leandro municipal boundary but within the City's planning area and within its Sphere of Influence established by the Alameda Local Agency Formation Commission (LAFCO). Relevant excerpts from the San Leandro General Plan (2002) include the following.

According to the San Leandro General Plan, the Fairmont Campus is within the City's Sphere of Influence and its land use designation is Public.

The discussion of land use for areas that are outside of the San Leandro municipal boundary but within the City's Sphere of Influence and planning area are noted in the City General Plan as areas with which the City has continuing interest. The City's interest in the Fairmont Campus is described this way (text with specific relevance to the Camp Sweeney project are underlined):

> *The San Leandro Planning Area includes three square miles of unincorporated Alameda County located to the east and southeast of the City. Although this area is beyond the City limits, its development has the potential to affect San Leandro neighborhoods and business districts. State law provides the City with the authority to advise the County on its vision for this area through the General Plan. Accordingly, this section of the General Plan establishes the following objectives:*
>
> - *Work collaboratively with the City of Oakland and Alameda County to address land use, transportation, public safety, and other issues of mutual concern along and beyond the San Leandro City boundaries.*
> - *<u>Actively participate in the review of development and capital improvement proposals for</u> the San Leandro sphere of influence, including Ashland, Hillcrest Knolls, Fairmont Ridge, <u>the County Hospital</u>, and western Castro Valley.*
> - *<u>Actively participate in long-range planning for the County Hospital properties</u>.*
> - *Conserve the rural-residential character of the Hillcrest Knolls area.*

Although the Existing San Leandro Property is located outside of any city's jurisdiction, it is located near the Hillcrest Knolls neighborhood, just outside of San Leandro's city limits. This area is one of several areas situated east and southeast of the City of San Leandro—sometimes referred to as unincorporated San Leandro—that are in unincorporated areas but within the City's Sphere of Influence. The Sphere of Influence is defined by the California Government Code as the "probable ultimate physical boundaries and service area" of a city, as designated by LAFCO. Although cities are empowered to consider these areas in their general plans, a city does not have authority to regulate a property, and a city's general plan, zoning, and other policies do not apply to that property, unless and until it has been annexed into that city.

As permitted by State law, the land use element of the City of San Leandro's General Plan identifies the uses permitted on certain property located outside its boundaries, including the Project site. According to this element, the Project site is located within the County Hospital Planning Area of unincorporated San Leandro, and is identified as Public land use in the City's diagram of unincorporated area land uses.

Consistency Analysis: New development at the Project site would involve a public/governmental type of land use, which is permitted on County-owned land. Moreover, the Project site is not within San Leandro's jurisdiction and the requirements of its general plan do not apply to this property. Nonetheless, although the proposed Project is not governed by the City of San Leandro's General Plan, use of the site as proposed would be consistent with the City's General Plan Land Use Element because the Plan allows public/quasi-public uses on this property.

Hillcrest Knolls/Fairmont Ridge

Hillcrest Knolls is a residential area of about 300 homes located adjacent to the San Leandro City limits on the east side of I-580. The area is characterized by narrow, winding streets, hilly terrain, and single family homes in a country setting. The area is mostly built out, with some potential for infill housing. The Alameda County General Plan maintains the status quo in Hillcrest Knolls, with a "low density residential" designation applied.

Fairmont Ridge consists of a large open hillside to the east of the Bay-O-Vista neighborhood. The ridge is an important visual resource for San Leandro and provides a picturesque backdrop for much of the City. Most of the land was acquired by the East Bay Regional Park District in the early 1990s. The land is designated as Open Space by the County General Plan and there are no plans for additional development there. Due to the steep slopes and aesthetic and ecological value of the area, the ridge is envisioned as a conservation area rather than an area for active recreation. The City supports plans for trails and staging areas on the site, and continued management to reduce fire hazards and protect natural resources.

At the south end of Fairmont Ridge, the County Hospital complex includes a campus of public buildings along Fairmont Drive and Foothill Boulevard. These buildings include the County Health Department, juvenile justice facilities, maintenance facilities, traffic hearing offices, and a variety of other County offices and service facilities. The County General Plan designates these areas for Public uses. However, most of the landholdings are undeveloped and some of the facilities face an uncertain future. Communication between the City of San Leandro and Alameda County on these areas is important and should continue in the future.

Consistency Analysis. Based on the foregoing excerpts from the two planning policy documents relevant to the Project site, it is apparent that provided there is communication and interaction between the County and the City of San Leandro, as called for above, the proposed Project would not be in conflict with any of the adopted and applicable planning and land use policies. Further, and as described in the Regulatory Setting above, under State law, the County is not bound by local regulations; it is allowed to develop County-owned land for public and/or government use.

Alameda County General Plan

The Alameda County General Plan, Scenic Route Element includes the following policies pertinent to new development located within a designated scenic route:

Policy *Architectural and site design review by the appropriate local jurisdiction should be provided for each site and for all new or altered structures so that particular consideration will be given to appearances that will enhance scenic qualities from the scenic routes. Originality in landscape and construction design should be encouraged.*

Such designs should be in keeping with cityscape and natural skyline and reflect the density, movement and activities of the population.

Policy *Landscaping should be designed and maintained in scenic route corridors to provide added visual interest, to frame scenic views and to screen unsightly views.*

Policy *Public agencies and private individuals having control of large holdings should be encouraged to protect and enhance natural resources within their properties. Cooperation should also be sought with owners of smaller lots and with community improvement and conservation groups.*

Consistency Analysis. New development at the Project site would be subject to review by the General Services Agency, which will consider the requirements of the Scenic Route Element as part of the design-build contract that would be let to a contractor. The primary scenic route corridor in the vicinity of the site extends up to 1,000 feet from the roadway, including I-580 and Fairmont Drive. The proposed Project is approximately 1,900 feet from I-580. This distance as well as the intervening landscaping and existing development at the lower portions of the site provide substantial screening for the new campus. The Project would be developed adjacent to Fairmont Drive and would be visible from that roadway, but landscaping between the roadway and the campus buildings would provide substantial screening. Therefore, development of the Project would not be in conflict with the County's Scenic Corridor policies.

Alameda County Zoning

Alameda County zoned the Fairmont Campus as PD, Planned Development. The PD District is defined for a specific parcel of land according to the ordinance adopted by the Board of Supervisors for site-specific development. The PD District includes a land use plan and provisions of reclassification that identify the allowed uses and procedures for implementing that development. The proposed Project site was zoned PD at the request of the GSA to provide for on-going operation of the existing use as part of a bond financing and insurance program in 1995. No provisions of reclassification were attached to that action. No heavy industrial or manufacturing use is allowed by this designation.

Consistency Analysis. New development on the site would involve a public/governmental land use, which is not excluded in a PD zoning district. In addition, under State law the County is not bound by local regulations; it is allowed to develop County-owned land for public and/or government use.

ENVIRONMENTAL CONSEQUENCES AND MITIGATION MEASURES

Significance Criteria

According to the CEQA Guidelines, the Project would have a significant environmental impact if it would result in:

- The physical division of an established community.
- A conflict with any applicable land use plan, policy, or regulation of an agency with jurisdiction over the project adopted for the purpose of avoiding or mitigating an environmental effect.

- A conflict with any applicable habitat conservation plan or natural community conservation plan.

Impacts and Mitigation Measures

The physical division of an established community

NO IMPACT. Development of the proposed Project would not physically divide the surrounding community. Camp Sweeney would be built adjacent to a portion of Fairmont Drive that is currently undeveloped except for deteriorated asphalt parking lots and the vacant site formerly occupied by the County's Juvenile Hall. The neighboring residential development of Hillcrest Knolls is an established residential neighborhood separated from the Project site by Fairmont Drive. Other uses within the Fairmont Campus—including the new Juvenile Justice Center, the John George Psychiatric Hospital, Fairmont Hospital, and other health care and social service agencies—would continue to operate and function without change. The existing Camp Sweeney buildings would be demolished following the completion of the proposed Replacement Project and its site would be restored. Alameda County's Fairmont Campus, of which Camp Sweeney is a part, would remain essentially unchanged except for the relocation of Camp Sweeney to its new location.

Conflict with applicable land use plans and policies adopted to avoid or mitigate an environmental effect

NO IMPACT. The Project site is not subject to local land use policies, and thus there is no impact arising out of conflict with local policies adopted to avoid or mitigate an environmental effect. Project development at this site would result in a continuation and expansion of existing uses.

Conflict with any applicable habitat conservation plan or natural community conservation plan

NO IMPACT. The proposed Project would not conflict with any habitat conservation plan or natural community conservation plan because there are no habitat conservation plans or natural community conservation plans applicable to the area.

5

AESTHETICS AND VISUAL QUALITY

This chapter of the Draft EIR identifies visual qualities and characteristics of the Project site and its surroundings and assesses potential effects of the Project on local visual quality. The discussion is particularly focused on determining if the Project would have a significant adverse effect on identifiable scenic views or vistas, scenic resources, historic resources as they relate to scenic qualities, and general visual qualities. The chapter also addresses the potential for creation of adverse levels of light or glare, which would adversely affect day or nighttime views. These criteria are consistent with the CEQA guidelines.

ENVIRONMENTAL SETTING

The proposed site for the Camp Sweeney Replacement Project is located in an unincorporated area of Alameda County in the hills above and adjacent to the City of San Leandro. The site is downhill from the Fairmont Ridge and directly below and west of the new Juvenile Justice Center, in an area designated by the City of San Leandro as the County Hospital district. The site is adjacent to Fairmont Drive which continues farther to the north and east in a U-shaped loop, rising to the top of Fairmont Ridge and connecting to Lake Chabot Road as it descends east into Castro Valley. Residential uses in the Hillcrest Knolls community are immediately west of the Project site, across Fairmont Drive.

A visual survey was conducted by Lamphier – Gregory to identify the visual qualities, characteristics, and scenic resources of the Project site. The survey consisted of several visits in which the area was viewed while traveling by automobile and walking. Several representative photographs are included, taken from locations indicated in **Figure 5.1**.

Figure 5.2 is taken at the foot of Van Avenue, looking north, with the homes in Hillcrest Knolls extending on internal roads to the left, and with the mature trees along the edge of the community on the right. Van Avenue parallels Fairmont Drive across from the Project site.

The photo in **Figure 5.3** is a view looking south along the west side of Fairmont Drive from across the street from the entrance to the North Access Road. Van Avenue and the Hillcrest Knolls community are located to the right of the mature trees at right.

The photos in **Figures 5.4 through 5.7** show Fairmont Drive and aspects of the Project site including the largely empty parking lots.

Figure 5.1. Photograph Viewpoint Locations and Direction

Figure 5.2. Van Avenue, Looking North

Figure 5.3. Van Avenue Looking South from Placer Street

Figure 5.4. View of Fairmont Drive Looking Southwest

Figure 5.5. Project Site Looking North from South Access Road Entrance

Figure 5.6. Project Site Looking North

Figure 5.7. Project Site Looking South from North Access Road

Figure 5.8 on the next page illustrates how little of the Project site is visible from the Hillcrest Knolls community because of the tall stand of trees along Van Avenue. As indicated in the aerial, the picture is taken from the corner of Placer Drive and Van Avenue at the only point along Van Avenue where a break exists in the chain link fence and mature trees; the gymnasium building from the former Juvenile Hall complex is visible at the far edge of the Project site; the metal stanchions in the foreground appear to be intended to allow access to Fairmont Drive for pedestrians and bicycles but not vehicles.

Figure 5.8. View of the Project Site from Van Avenue at Placer Drive

As indicated in **Figure 5.9**, the Fairmont Campus, including the new Juvenile Justice Center, Camp Sweeney and the County's other institutional uses sits below the visually prominent Fairmont Ridge. **Figure 5.10** is taken looking east across Fairmont Drive showing the main entrance to the Project site at North Access Road.

Figure 5.9. Fairmont Ridge

Figure 5.10. North Access Road

Figure 5.11 Proposed "Camp Like" Architectural Character Intended for Camp Sweeney

REGULATORY SETTING

State

California Scenic Highway Program

Recognizing the value of scenic areas and the value of views from roads in such areas, the state Legislature established the California Scenic Highway Program in 1963. This legislation sees scenic highways as "a vital part of the all-encompassing effort…to protect and enhance California's beauty, amenity and quality of life." Under this program, a number of State highways have been designated as eligible for inclusion as scenic routes. Once the local jurisdictions through which the roadway passes have established a corridor protection program and the Departmental Transportation Advisory Committee recommends designation of the roadway, the State may officially designate roadways as scenic routes. Interstate highways, State highways, and county roads may be designated as scenic under the program. The Master Plan of State Highways Eligible for Official Scenic Highway Designation maps designated highway segments, as well as those that are eligible for designation. Changes to the map require an act of the legislature.

West of the project site, I-580 is an officially designated State Scenic Highway. South of the project site, I-580 is an eligible State Scenic Highway, but it has not been officially designated. Both portions of I-580 lie less than two miles from the project site.

A corridor protection program must be adopted by the local governments with land use jurisdiction through which the roadway passes as the first step in moving a road from "eligible" to "designated" status. Each designated corridor is monitored by the State and designation may be revoked if a local government fails to enforce the provisions of the corridor protection program. While there are no restrictions on scenic highway projects, local agencies and Caltrans must work together to coordinate transportation and development projects and ensure the protection of the corridor's scenic value to the greatest extent possible. In some cases, local governments have their own land use and site planning regulations in place to protect scenic values along a designated corridor. At a minimum, each corridor protection program must include:

- Regulation of land use and density of development
- Detailed land and site planning
- Control of outdoor advertising devices
- Control of earthmoving and landscaping
- Regulation of the design and appearance of structures and equipment.

Local

Alameda County General Plan – Scenic Route Element Program

The Scenic Route Element of the General Plan is intended to serve as a means of continuing coordination among the city and county planning functions of Alameda County and the State Division of Highways in the development of a county-wide system of scenic routes. The Scenic Route Plan serves as a guide for development of city and county legislation and programs to protect and enhance the scenic values along routes designated in the plan and in other areas in the county visible from scenic routes.

ENVIRONMENTAL CONSEQUENCES AND MITIGATION MEASURES

Significance Criteria

The Project would have a significant environmental impact if it were to result in:

- A substantial adverse effect on a scenic vista.
- Substantial damage to scenic resources, including, but not limited to, trees, rock outcroppings, and historic buildings within a state scenic highway.
- Substantial degradation in the existing visual character or quality of the site and its surroundings.
- Creation of a new source of substantial light or glare which would adversely affect day or nighttime views in the area.

Impacts and Mitigation Measures

Substantial degradation in the existing visual character or quality of the site and its surroundings.

BENEFICIAL IMPACT. The development of a new Camp Sweeney campus at the proposed Project site would involve a significant change in the visual character of the area. The existing lightly-used and deteriorated parking lots would be replaced with a series of architecturally coherent and compatible one- and two-story buildings together with site landscaping and walkways. The larger two-story buildings would be farthest from the Fairmont Drive edge of the site. Perimeter and vine-covered 10-foot-tall fencing would block most pedestrian-level views into the site. The site plan proposes to distribute the seven buildings in a manner that would be respectful of and integrated with the site's natural slope which descends approximately 50 feet from north to south. At this point in the Project's planning and design process, none of the proposed Camp Sweeney buildings have been designed but the design intent, as reflected in the illustrations presented in **Figure 5.11**, is to establish a small scale camp-like architectural character, distinctly non-institutional in look and feel resulting from the extensive use of residential elements. New buildings consistent with these illustrations together with appropriate landscaping would represent a dramatic positive change from existing conditions. While the degree of physical and visual change would be significant, the changes would enhance the visual character of the area and would not degrade the site or its surroundings.

Substantial adverse effect on a scenic vista or substantial damage to scenic resources

NO IMPACT. No scenic vistas or scenic resources would be affected by the relocation and construction of the new Camp Sweeney buildings at this site. The visually prominent Fairmont Ridge that overlooks the Project site as seen in **Figure 5.9** would not be affected by the low scale character of the Project. Views in the area from all viewpoints would not be significantly changed.

IMPACT 5.1: Creation of a new source of substantial light or glare, which would adversely affect day or nighttime views in the area.

POTENTIALLY SIGNIFICANT AND MITIGABLE IMPACT. The Project would add additional sources of light to the site that have the potential to increase light level at nearby residential uses.

Sources of light and glare in the Project vicinity include substantial interior and exterior lighting at the Juvenile Justice Center, located east of and up the slope from the Project site, and light from the existing parking lots. Light and glare associated with vehicular traffic along Fairmont Drive also create sources of glare. Except for the exterior lighting at the Juvenile Justice Center, the existing level and sources of light and glare are typical of those in a developed urban setting.

Specific exterior lighting fixtures and levels of illumination have not been established at this point in the development of the Project's design details. However, the design intent has been established by the Project's initial architectural team and is expressed as follows:

> Exterior and site lighting will be integrated with the building or landscape element to illuminate outdoor spaces and all zones along building edges. Where integrated fixtures are not possible, bollards and poles will be provided to fit the camp aesthetic while prioritizing durability. The exterior lighting will emphasize safety, avoid dark zones where one could hide, and be sensitive of the surrounding residential community by carefully selecting fixtures that avoid light pollution. A secondary emergency system is to be provided to flood light the site, but will not be used in daily operation.[1]

If the design of the proposed Camp Sweeney campus were to require as much night lighting as is employed currently at the Juvenile justice Center, that level of light would be considered as having a significant adverse impact on nighttime views in the area. However, the design and performance criteria cited above for the proposed Camp Sweeney project are intended to minimize light and glare impacts on adjacent areas. In addition, and as noted, perimeter vine-covered fencing and landscaping would likely obstruct most pedestrian or vehicle-level views into the site from Fairmont Drive or other off-site locations. To the extent future Camp Sweeney buildings are visible, night lighting emanating from the buildings would be similar to that from small scale residential buildings. Exterior walkways and parking lot lighting would be restricted to shield direct light sources to the subject site only.

To assure that an unacceptable level of light and glare not result from the project, the following mitigation measure would apply.

> **Mitigation Measure Visual – 5.1: Compliance with Lighting Standards.** The Project shall limit exterior lighting for outdoor parking areas and walkways to light sources not higher than 24 feet, that create a cone of direct illumination not greater than 60 degrees from a light source higher than 6 feet, and that allow exterior light to shine directly onto an adjacent street or property; maximum illumination at ground level should not exceed 3 foot-candles or 0.5 foot-candles measured at the closest residential property line. Shielding shall be used where feasible and effective to prevent glare or direct illumination on adjacent properties.
>
> *Resulting Level of Significance:* With implementation of **Mitigation Measure Visual – 5.1** to protect nearby residential uses from substantial light or glare, the impact related to increased light levels would be less than significant with mitigation.

[1] Komorous-Towey Architects, Camp Wilmont Sweeney Replacement Project, Project Establishment Documents – Task 1, July 9, 2015

6

GEOLOGY, SOILS, AND SEISMICITY

ENVIRONMENTAL SETTING

Background

The Bay Area is located in the Coast Range geomorphic province of California which is characterized by northwest trending mountain ranges. The geology is complex with a history of faulting, subsidence, sedimentation, and tectonic uplift. San Francisco Bay and the Santa Clara Valley occupy a structural depression bounded by the Santa Cruz Mountains on the southwest and the Diablo Range and Oakland Hills on the northeast.

The Project site is in a seismically active area of California; several major fault systems exist in the area (**Figure 6.1**). Earthquakes occurring along these fault systems are capable of generating strong ground shaking. The San Francisco Bay Area is one of the most seismically active regions in the United States. The significant earthquakes that occur in the Bay Area are generally associated with crustal movement along well-defined active fault zones of the San Andreas fault system, which regionally trend in a northwesterly direction.

Faults are considered to be active if one or more of the following characteristics is evident:

- evidence of Holocene Age displacement (within the past 11,000 years),
- measurable tectonic creep along fault lines, and/or
- close proximity to linear concentrations or trends of earthquake epicenters.

Potentially active faults are defined as those that have evidence of Quaternary Age displacement (within the past 2 million years).

Soil liquefaction may occur when predominantly granular soils become more compact following ground shaking, therefore occupying less volume and resulting in settlement. Soils most susceptible to liquefaction and densification are loose, clean, poorly graded, fine-grained sands.

Expansive soils tend to shrink and swell with changes in moisture content. Expansive soils that are near the ground surface will shrink and swell due to normal seasonal variations in moisture and have the potential to cause damage to surface-mounted improvements such as buildings founded on shallow foundations, sidewalks, and pavements.

Local Physical Setting

Geotechnical reports prepared by Kleinfelder provide a solid understanding of seismic and soil conditions regarding the proposed use of the site for the Camp Sweeney Replacement Project. The findings of the Kleinfelder reports are summarized in this section.[1]

Site History

Review of aerial photographs shows that parts of the site have been occupied since the 1930s and have undergone significant modification and grading. In 1939, a government facility occupied the location of the existing Chabot Boy's Camp and a hog farm operated on the land currently used by Camp Sweeney. Site alterations include episodes of grading, quarrying, and fill placement. Extensive fill consisting of gravel and clay was placed along the north and northeastern margins of the site in the 1970s during construction of Fairmont Drive, located directly west of the site area. Bedrock topographic highs consisting of gabbro were excavated along the alignment of Fairmont Drive and the excavated material was used to fill an abandoned rock quarry located in the east-central part of the site, as well as several steep, west-flowing drainages that cross the site. Estimated fill thickness ranges between less than 10 feet up to at least 70 feet, based on the comparison of topographic maps prepared before and after construction of Fairmont Drive, as well as trench exposures from geotechnical studies.

Geology and Seismicity

The Project site lies west of the active trace of the Hayward Fault. Elevations at the site range from a high of about 214 feet to a low of 170 feet above mean sea level. The site drops in elevation from north to south with a difference of about 45 feet over an approximate distance of 600 feet. The three main parking lots are relatively flat and are terraced to accommodate the change in elevation.

Based on interpretation of topographical maps, geologic field reconnaissance, trench exposures, and borehole information, the site consists of alluvial deposits inset into weathered gabbro at the west-facing mountain front. Field reconnaissance and review of previous geotechnical reports prepared for buildings in this part of the site shows that the alluvium was locally graded and removed exposing underlying gabbro bedrock in places.

The Hayward Fault, which traverses the site, is considered a major active fault. Other major active faults in the Bay Area include the San Andreas, San Gregorio, Rodgers Creek, Concord-Green Valley, Calaveras, and Greenville faults. The site will likely experience minor earthquakes and possibly a major earthquake on one of the nearby active faults during the life of any development.

The site is within the Alquist–Priolo Earthquake Hazard Zone (A-P Zone) surrounding the Hayward Fault (**Figure 6.2**). Published geologic maps show active and potentially active strands of the Hayward Fault at the site.

---

[1] Kleinfelder, *Preliminary Geotechnical Investigation Proposed Camp Sweeney Rebuild Supplemental Site 2400 Fairmont Drive San Leandro, California,* November 14, 2014

Kleinfelder, *Phase 3 Fault Investigation Proposed Camp Sweeney Rebuild 2400 Fairmont Drive, San Leandro, California*, February 24, 2015

Kleinfelder, *Final Geotechnical Investigation, Proposed Camp Sweeney Rebuild Supplemental Site 2400 Fairmont Drive San Leandro, California*, December 9, 2015

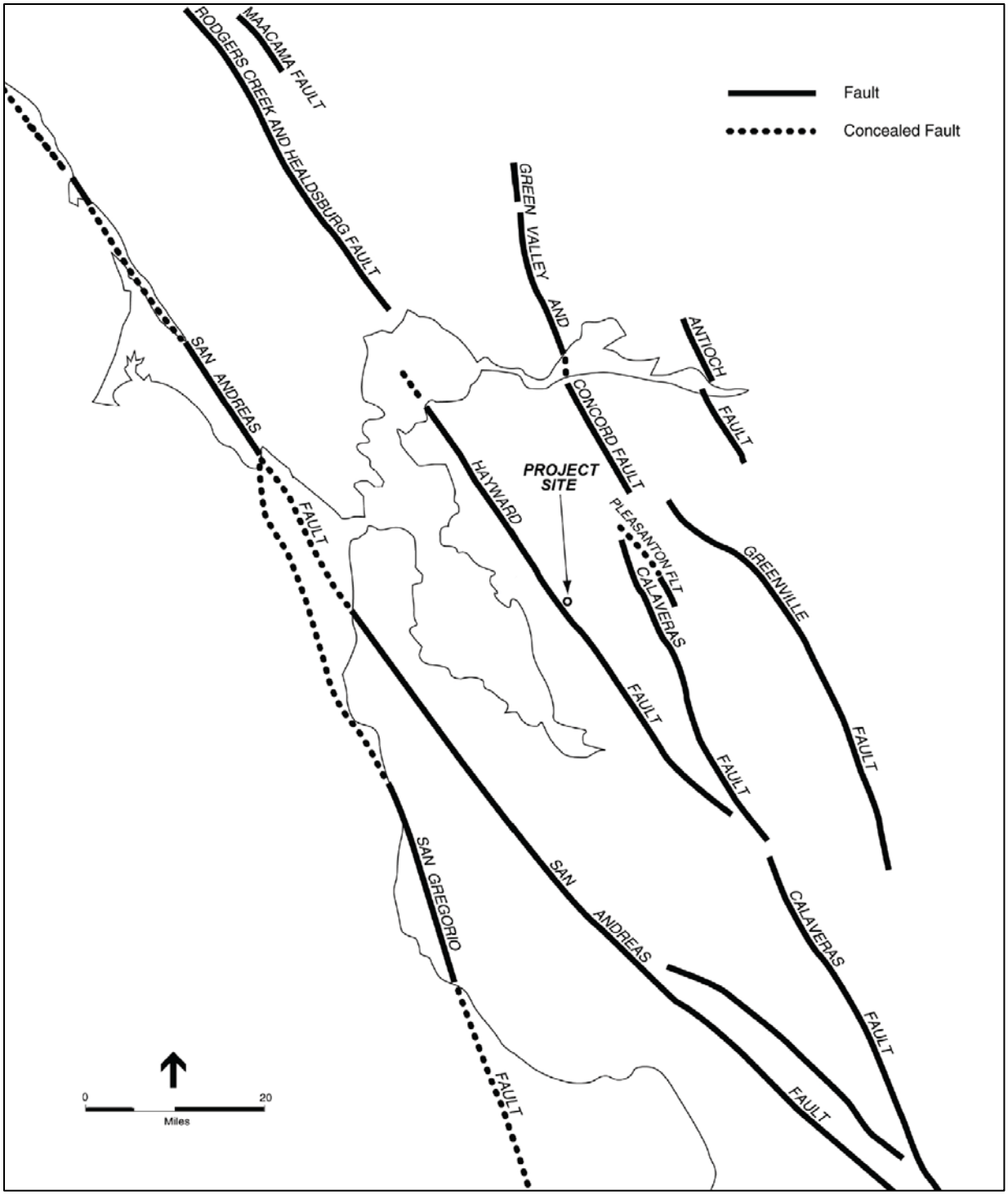

Figure 6.1. Seismic Faults in the San Francisco Bay Area

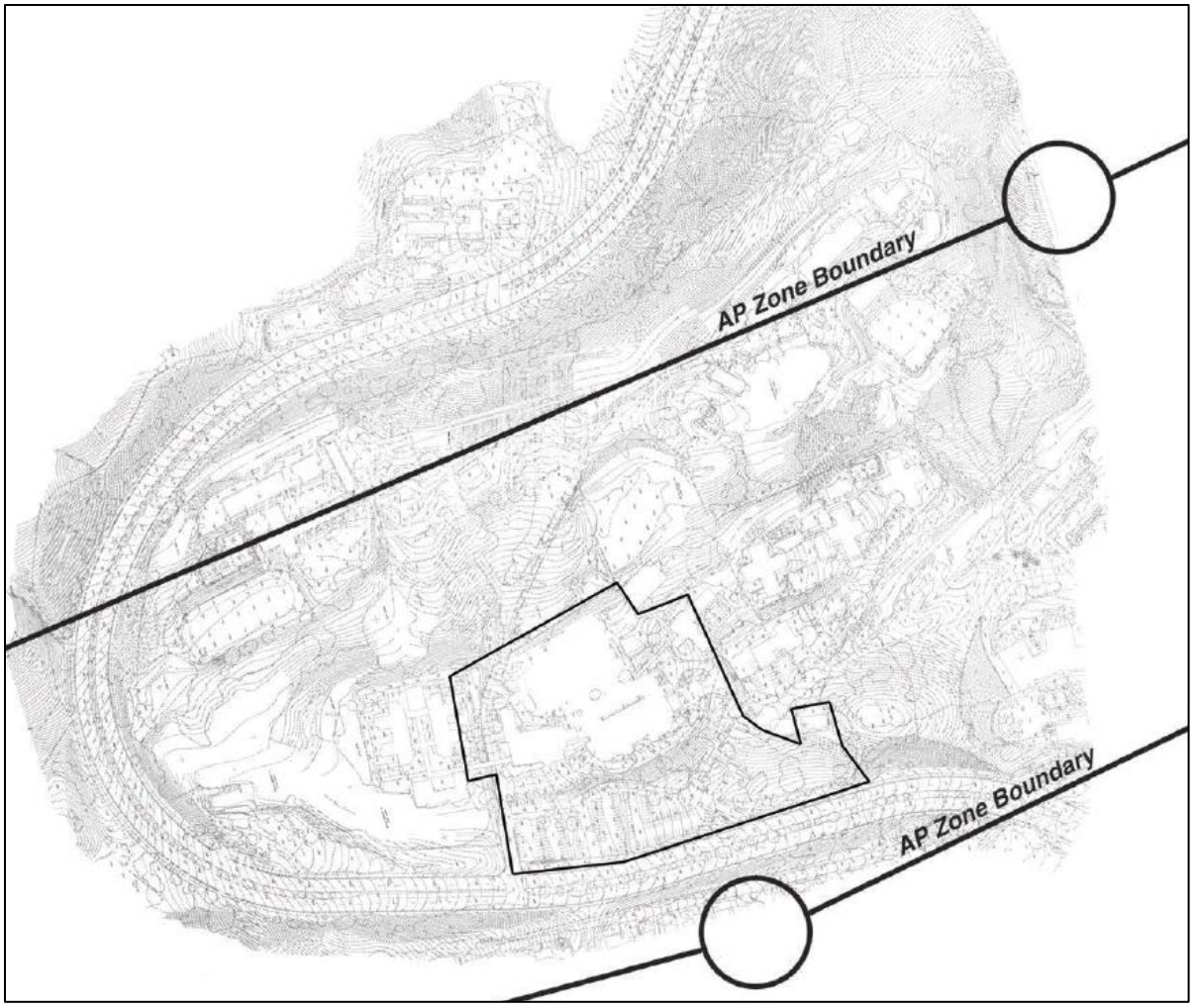

Figure 6.2. Alquist-Priolo Earthquake Hazard Zone

Surface Conditions

The site lies at the eastern edge of the alluvial plain bordering the western margin of the East Bay Hills. The surface of the site is primarily covered with existing asphalt from a series of parking lots and associated driveways. The three main parking lots are relatively flat and are terraced to accommodate the change in elevation. The southeastern portion is a landscaped hillside with large trees and a retaining wall. Chain-link fencing is found on the western perimeter of the site along Fairmont Drive as well as surrounding the northernmost parking lot.

Significant local variations in surface topography exist due to the following:

- east-west trending drainages leading from upslope areas to a larger northwest-southeast trending drainage west of the site, and
- various cuts and fills associated with previous development at the site.

Subsurface Conditions

Bedrock geology in the East Bay Hills is structurally and lithologically complex. The oldest rocks in the vicinity are Mesozoic Franciscan Complex sedimentary and volcanic rocks that were accreted to the western margin of the North American plate during the Cretaceous. These rocks are juxtaposed against

Upper Jurassic/Lower Cretaceous rocks of the Great Valley Sequence, and in the vicinity of the study area are intruded by Mesozoic mafic and ultramafic rocks (gabbro, gabbro-diabase). Bedrock in the study area has been intensely sheared and folded, and many of the rocks are serpentinized. The bedrock at the site is predominantly composed of highly fractured, sheared and weathered gabbro of Jurassic age. The depth to bedrock varies, but it exists close to or at the ground surface throughout much of the site.

Subsurface conditions at the site were explored by Kleinfelder on October 14, 2014 by drilling three borings to depths ranging from about 25 to 26 feet below the existing ground surface. Subsurface conditions are comprised of layers of undocumented fill placed on native gabbro bedrock and/or alluvial deposits. A highly weathered to decomposed gabbro bedrock was encountered in all three borings beneath the fill and soil.

The site is blanketed with undocumented fill material extending to depths of less than 1 foot to more than 20 feet. The fill is highly variable and appears to be the result of past earthwork related primarily to the installation of the north-south oriented storm drain which allowed filling of the site for parking. The fill includes expansive clay, silt, sand and gravel of variable density and composition. Although much of the fill appeared to be relatively dense and granular, areas of soft clay and minor amounts of debris in the fill are also present. Undocumented fill can vary substantially over short distances and may contain organic matter, debris and/or voids that are not detected in small diameter explorations or widely spaced trenches and if left in its present condition, the material can experience random and differential settlements from a wide variety of sources including: settlement/densification due to new building or fill loads, vibrations, or seismic events; collapse of voids; deterioration of organic material; or similar events. The undocumented fill is not considered suitable for the support of shallow foundations or other facilities. It is also considered generally undesirable for areas that will receive concrete slabs or concrete pavement as it can result in significant cracking and the need for continuing repairs and higher than normal maintenance.

Information provided in the Environmental Site Assessment prepared for the Project suggests that there may also be outcrops of Ultra-mafic “serpentine’ bedrock which is known to occur in some areas of the East Bay Hills. Serpentine bedrock can be the source of naturally-occurring asbestos, and excavation or other disturbance of Site soils may require compliance with the California Air Resources Board regulations codified in the California Code of Regulations, Title 17, Section 93105.[2]

Expansive Soil

Potentially expansive soils were encountered in test borings in a number of areas at the site. Beneath surficial asphalt pavement most of the site is blanketed with clayey sand and highly expansive sandy clay. The near surface clay has a very high expansion potential. Expansive soils are not suitable for support of shallow foundations in their native condition. When they undergo seasonal variation in moisture content expansive soils will experience significant volume changes that generate cycles of heave and settlement with resultant distress to lightly loaded footings as well as concrete slabs, pavements and other improvements.

Groundwater

Groundwater was not encountered at the time of drilling or at the time of trenching activities. In general, groundwater levels at the site are below the depth of planned excavation. However,

[2] RGA Environmental Site Assessment Report, 2200 Fairmont Drive, San Leandro, California, April 15, 2015, p. 1

groundwater is likely present at shallower elevations in the form of isolated seepage zones or locally perched conditions, particularly during the rainy season.

Landslides

Large-scale landsliding occurred throughout the Bay Area during the Pleistocene Age (more than 10,000 years ago) when the local climate was significantly wetter than it is today. Locally, these ancient massive bedrock landslides are common in areas of inherently weaker bedrock, such as might be expected close to the Hayward Fault. In the generally drier climate of the past 10,000 years, these massive bedrock landslides have typically become inactive. However, secondary landsliding continues to occur within generally weakened rock masses comprising the ancient landslide complexes. Old landslides are present in the hills east of the site.

Fault Traces

The site is characterized by a multilevel, graded and paved parking lot that is bounded by Fairmont Drive on the west, and a moderately steep slope on the east. Extensive grading operations and utility construction in the past, to create these parking areas, has obliterated much of the natural topography. A drainage channel exists at the northern boundary, which is captured and transmitted beneath and across the parking lot in a north-south fashion via a 60-inch diameter concrete storm drain pipe that is buried deep under the site. The County is permitting new structures to be constructed over this line.

Investigation of the initial site considered for the new Camp Sweeney (i.e., the site of the former Juvenile Hall; CTS 2014) identified several active faults which precluded development for human habitation. In an effort to identify a viable building site, Alameda County authorized the investigation of the parking lot area located immediately west of the initial site (i.e., the proposed Project site).

Kleinfelder conducted further geologic assessments specifically related to active faulting at the proposed site. Their initial investigation (November 2014) delineated three zones site for conceptual planning purposes. The three zones were color coded as described below.

- Green Zone – Clear of active faulting and suitable for development with structures intended for human habitation
- Orange Zone – Area that might be cleared of active faulting, provided additional detailed subsurface explorations are conducted in these areas to more accurately define the subsurface geologic structure and character
- Red Zone – Area that contains evidence of active faulting and should be avoided for structures intended for human habitation

Subsequently, Kleinfelder's *Phase 3 Fault Investigation* (February 2015) was performed to provide additional exploration in the Orange Zone for signs indicative of active faulting. After the Phase 3 investigation and assessment was complete, the Orange Zone was determined to be clear of active faulting and became part of the Green habitable zone. A graphic depicting the final delineation of the red and green zones and the resulting site plan showing building footprints and other data is presented in **Figure 6.3**.

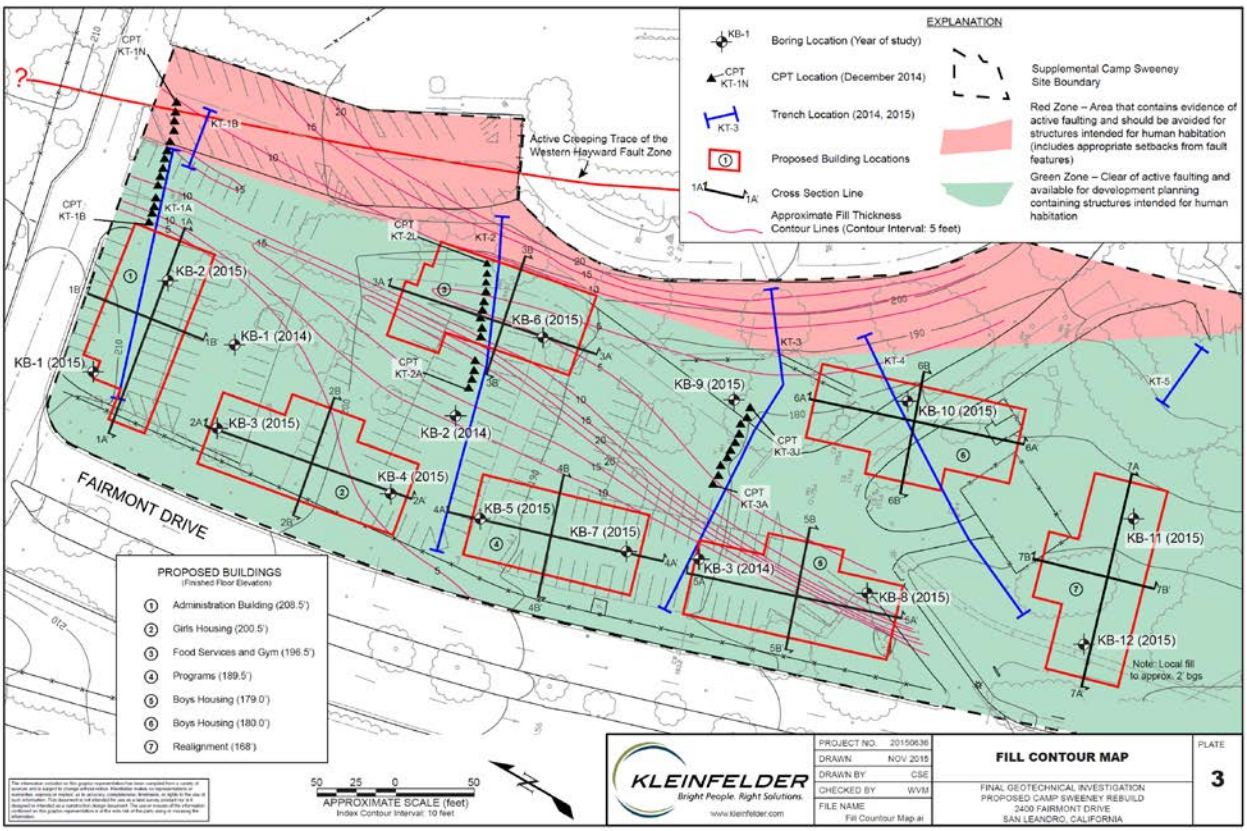

Figure 6.3 Results of Seismic Investigations to Determine Zones Safe for Buildings

REGULATORY SETTING

In 1973, the Alquist–Priolo Earthquake Fault Zoning Act went into effect. Alquist-Priolo regulates development near active faults so as to mitigate the hazard of surface fault rupture. As part of the Alquist-Priolo Fault Evaluation Program, the State Geologist in conjunction with the California Division of Mines and Geology has delineated Earthquake Hazard Zones around known active faults.

In April 2008, scientists and engineers released a new earthquake forecast for the State of California called the Uniform California Earthquake Rupture Forecast. It was compiled by the U.S. Geological Survey (USGS), Southern California Earthquake Center, and the California Geological Survey, with support from the California Earthquake Authority. The forecast updates the earthquake forecast made for the greater San Francisco Bay Area by the 2002 Working Group for California Earthquake Probabilities. The report evaluates the probabilities for earthquakes of magnitude 6.7 or greater in the next 30 years. The overall probability of a magnitude 6.7 or greater earthquake in the Greater Bay Area is 63%, about 2 out of 3, which is very close to the probability of 62% obtained by the 2002 Working Group. The earthquake probability is highest for the Hayward-Rodgers Creek Fault system, 31%, or nearly 1 out of 3. The last damaging earthquake on the Hayward Fault was in 1868. The 140 years since 1868 is the same length of time as the average interval between the past 5 large earthquakes on the southern Hayward Fault. There is an estimated 32 percent chance that at least one magnitude 6.7 or greater earthquake will occur on the Hayward Fault before 2030 and an estimated 70 percent chance that one magnitude 6.7 or greater earthquake will occur in the San Francisco Bay region before 2030 (USGS 1999).

According to the Alquist–Priolo Earthquake Fault Zoning Act, construction of new buildings and/or alteration of existing structures located within the A-P Zone require geologic investigation to assess the presence of faults, their activity level, and the potential for fault related ground surface rupture at the building site. Consistent with this requirement, extensive geotechnical investigations have been undertaken at the Project site to identify fault traces and determine those specific parts of the Project site that would be safe from seismic hazards.

ENVIRONMENTAL CONSEQUENCES AND MITIGATION MEASURES

Significance Criteria

Based on the criteria recommended in Appendix G of the CEQA Guidelines, the Project could have a significant environmental effect if it would result in:

- Exposure of people or structures to potential substantial adverse effects, including the risk of loss, injury or death involving:

  (i) Rupture of a known earthquake fault

  (ii) Strong seismic ground shaking

  (iii) Seismic-related ground failure, including liquefaction

  (iv) Landslides
- Substantial soil erosion or the loss of topsoil.
- Placement of structures on a geologic unit or soil that is unstable, or that would become unstable as a result of the Project, and potentially result in on- or off-site landslide, lateral spreading, subsidence, liquefaction or collapse.
- Placement of structures on expansive soil, creating substantial risks to life or property.

Impacts and Mitigation Measures

IMPACT 6.1: Risk of Loss, Injury or Death Involving Rupture of a Known Earthquake Fault

POTENTIALLY SIGNIFICANT AND MITIGABLE IMPACT. Active fault traces have been identified on the site of the former Juvenile Hall which was originally considered as the site for the Camp Sweeney Replacement Project. However, the presence of the trace faults has ruled that part of the site unusable for structures. As a consequence, the Project proposes that part of the Project site be limited to athletic activities such as soccer, baseball, and similar sports; no structures would be built where traces of the Hayward Fault have been identified.

The site plan for the Camp Sweeney Replacement Project was prepared based on the findings of extensive subsurface geological investigations. Core samples from test boring and trenching conducted across the site informed the boundary between buildable portions of the site and unbuildable portions, as shown in **Figure 6.3**. The project has been designed to accommodate the constraints imposed by those fault traces, and subsequent design-level investigations and construction monitoring will ensure

that the project is constructed in a manner that conforms to all applicable codes regarding seismic safety.

> **Mitigation Measure Geology – 6.1: Site Design for Fault Avoidance.** The development at the site shall be designed to avoid placing any structures for human occupancy within 25 feet of the surveyed location of any active fault traces. Design-level investigations and construction monitoring shall verify that the project conforms to all applicable codes and regulations. Areas where active faults have been identified shall be used only for open space. Utilities shall not be built within the geologic setback zone or cross the fault zone.
>
> *Resulting Level of Significance:* Implementation of **Mitigation Measure Geology – 6.1** would reduce the potentially significant impact of fault rupture hazards to a less than significant level.

IMPACT 6.2: Risk of Loss, Injury or Death Involving Strong Seismic Ground Shaking

POTENTIALLY SIGNIFICANT AND MITIGABLE IMPACT. The Project site is located in a seismically active region of California. Significant earthquakes in the Bay Area have been associated with movements along well-defined fault zones. Earthquakes occurring along the Hayward Fault, San Andreas Fault, or any of a number of other Bay Area faults have the potential to produce strong ground shaking at the site, which could result in risk of loss, injury or death. The proximity to the Hayward Fault makes it highly likely that strong seismic ground shaking will occur at the Project site. This represents a potentially significant environmental impact.

> **Mitigation Measure Geology – 6.2: Seismic Design.** The Project shall be designed to address the projected seismic shaking hazards present at the site, in conformance with the Uniform Building Code, California Building Code, and Board of Corrections design standards for juvenile detention facilities.
>
> *Resulting Level of Significance:* Compliance with current seismic codes and standards would reduce potential impacts associated with strong ground shaking to levels generally considered acceptable according to engineering standards for projects of this type in the seismically active San Francisco Bay region. Therefore, implementation of **Mitigation Measure Geology – 6.2** would reduce this impact to a level of less than significant.

IMPACT 6.3: Risk of Loss, Injury or Death Involving Liquefaction/Densification

POTENTIALLY SIGNIFICANT AND MITIGABLE IMPACT. Soils beneath the proposed Project site have been extensively studied and have been found to consist largely of undocumented fill material that is unsuitable to support the proposed structures. The undocumented material extends generally to depths ranging from 2 feet to approximately 20 feet where underlying gabbro bedrock material has been found. Construction of Camp Sweeney buildings on the undocumented fill material would expose the buildings to differential settlement and potential damage. Although Kleinfelder has concluded that the risk of liquefaction at the Project site is low, based on conditions encountered throughout the site and expected groundwater conditions,[3] mitigation of the potential risk is recommended.

> **Mitigation Measure Geology – 6.3: Soil Remediation**. The recommendation of the geotechnical engineer to remediate the soil conditions shall be implemented as the first phase of site

[3] Ibid.

preparation. This includes removal of all undocumented fill and alluvial material beneath the building areas followed by replacement with quality controlled engineered fill in accordance with the engineer's criteria for moisture content and compaction. The material shall be removed to a minimum distance of 5 feet (horizontally) outside of the building footprints. The native, potentially expansive fill can then be compacted to within 36 inches of planned finished grade. Within the upper 36 inches, non-expansive imported fill or chemically modified (i.e., lime-treated) native fill can be placed within the upper 36 inches of finished grade.

Resulting Level of Significance: Compliance with the geotechnical engineer's recommendations would reduce potential structural impacts resulting from unacceptable soil conditions beneath the Project sites to a level considered acceptable to support the proposed buildings. Implementation of **Mitigation Measure Geology – 6.3** would reduce this impact to a level of less than significant.

IMPACT 6.4: Risk of Loss, Injury or Death Involving Landslides

LESS THAN SIGNIFICANT IMPACT. The Project site is located in hilly terrain where landslides have occurred in the past. A very deep ancient landslide underlies the area to the east of the site where the Juvenile Justice Center now stands. That landslide has been inactive for thousands of years and has a very low to negligible risk of renewed movement. The new Juvenile Justice Center building complex, and the substantial retaining wall that supports it, provide a secondary benefit to the lower elevation Project site by protecting it from potential landslide impacts should one occur upslope from the Juvenile Justice Center. Consequently, risk of damage or other impacts from landslides is considered slight and impacts are less than significant.

IMPACT 6.5: Soil Erosion

During site preparation and excavation, there may be an increase in soil erosion from site development work unless measures to limit erosion are effectively implemented. Regulations under the federal Clean Water Act require that a National Pollutant Discharge Elimination System (NPDES) storm water permit be obtained for projects that would disturb more than 10,000 square feet during construction. Prior to construction, the RWQCB will require preparation of a Storm Water Pollution Prevention Plan (SWPPP) that contains specific actions (best management practices, or BMPs) to control the discharge of pollutants (including sediment) into the local surface water drainages. Following development, ongoing soil erosion may take place unless site-specific measures to control it are incorporated within the site design.

POTENTIALLY SIGNIFICANT AND MITIGABLE IMPACT. Site preparation could result in an increase in soil erosion. Unless suitable site-specific erosion control features are incorporated, the ongoing operation of the facilities proposed could also result in soil erosion. This represents a potentially significant environmental impact.

Mitigation Measure Geology – 6.5 Implementation of a SWPPP. The SWPPP will need to include stormwater quality BMPs that will reduce runoff of sediment and other pollutants during construction to less than significant levels. Some of the post-construction source control BMPs that could be included in the SWPPP would reduce the generation of pollutants from activities such as lawn maintenance, vehicle use, material storage, and waste collection/recycling. In order to be approved by the RWQCB, the SWPPP will need to demonstrate that implementation will reduce potential soil erosion to a level of less than significant.

Resulting Level of Significance: Implementation of a SWPPP would reduce the potential impact to a level of less than significant.

IMPACT 6.6: Soil Instability

POTENTIALLY SIGNIFICANT AND MITIGABLE IMPACT. As noted above, the geotechnical investigations have determined that the site is underlain by undocumented fill and alluvial material above the gabbro bedrock. The undocumented and alluvial material is considered unsuitable to support the proposed Camp Sweeney buildings due to the high potential for differential settlement and resulting structural damage. Consistent with the discussion in **Impact 6.3** above, failure to remediate the unstable soil conditions underlying the Project site would be considered a potentially significant impact.

Mitigation Measure Geology – 6.6: Implement **Mitigation Measure Geology – 6.3** regarding the replacement of undocumented fill materials underlying the Project site and replacing it with engineered fills in accordance with the geotechnical engineer's recommendations.

Resulting Level of Significance. Implementation of **Mitigation Measure Geology – 6.6** would reduce potential impacts associated with soil instability and differential settlement to a level of less than significant.

IMPACT 6.7: Expansive Soils

POTENTIALLY SIGNIFICANT AND MITIGABLE IMPACT. Expansive soils have the potential to damage surface-mounted improvements such as buildings on shallow foundations, sidewalks, pavements, retaining walls, and underground utilities. Highly expansive soils were encountered in test borings in a number of areas at the Project site. Construction of foundations and slabs close to the expansive soils has the potential to undergo variable and detrimental settlement or heave and result in property damage. This would represent a potentially significant environmental impact.

Mitigation Measure Geology – 6.7: Remediation of Expansive Soils. Implement Mitigation Measure 6.3 regarding the replacement of undocumented fill materials underlying the Project site and replacing it with engineered fills in accordance with the geotechnical engineer's recommendations.

Resulting Level of Significance: Implementation of **Mitigation Measure Geology – 6.7** would reduce the potential effects associated with expansive soils to a level of less than significant.

7

HYDROLOGY AND WATER QUALITY

ENVIRONMENTAL SETTING

Local Physical Setting

Drainage at the Project site enters ground level collection basins which discharge stormwater flow into an existing 60-inch storm drain pipe beneath the Project site. The storm drain pipe conveys runoff downstream into the Alameda County Flood Control and Water Conservation District (Zone 7) system, eventually draining into the Bay.

Geotechnical reports prepared by Kleinfelder[1] indicated that groundwater was not encountered at the time of drilling or at the time of trenching activities. In general, groundwater levels at the site are below the depth of planned excavation. However, groundwater is likely present at shallower elevations in the form of isolated seepage zones or locally perched conditions, particularly during the rainy season.

REGULATORY SETTING

Federal

Section 404 of the Clean Water Act

Waters of the U.S. (including wetlands) are subject to U.S. Army Corps of Engineers (Corps) jurisdiction under Section 404 of the federal Clean Water Act. Section 404 regulates the filling and dredging of U.S. waters. A Section 404 permit would be required for project construction activities involving excavation of, or placement of fill material into, waters of the United States or adjacent wetlands. The Corps, in reviewing Section 404 permit applications, stresses avoidance of impacts, minimization of unavoidable impacts and mitigation of unavoidable impacts. In addition, a Water Quality Certification (or Waiver thereof) pursuant to Section 401 of the Clean Water Act is required for Section 404 permit actions. This would need to be requested from the San Francisco Bay RWQCB.

National Flood Insurance Program

The Federal Emergency Management Agency has produced maps showing areas and elevations of 100-year flood hazard. The Federal Emergency Management Agency requires that finished floor elevations

[1] Kleinfelder, *Preliminary Geotechnical Investigation Proposed Camp Sweeney Rebuild Supplemental Site 2400 Fairmont Drive San Leandro, California,* November 14, 2014

Kleinfelder, *Final Geotechnical Investigation, Proposed Camp Sweeney Rebuild Supplemental Site 2400 Fairmont Drive San Leandro, California*, December 9, 2015

for development within a 100-year flood area be equal or greater than the 100-year flood elevation. The proposed Project site is not within a 100-year flood area.

State

Sections 1601 and 1603

The California Department of Fish and Wildlife (CDFW) has direct jurisdiction, under California Fish and Game Code Sections 1601-1603, over any activities that may divert or obstruct natural flow or substantially change or use any material from the bed, channel or bank of any river, stream or lake. If CDFW determines that the activity may substantially adversely affect fish and wildlife resources, a Lake or Streambed Alteration Agreement will be prepared.

The California Fish and Game Code requires that formal notification and subsequent agreement, including mitigation measures, must be completed prior to initiating such changes. General project plans must be submitted to CDFW that are sufficient to indicate the nature of a project for construction if the project would divert, obstruct or change a streambed; use material from the streambeds; or result in the disposal or deposition of debris, waste or other material containing crumbled, flaked or ground pavement where it can pass into a stream. The 1601 and 1603 Codes are similar to the Section 404 Permit, but the area of jurisdiction is typically defined on a case-by-case basis for the location, nature and extent of disturbance, and mitigation.

Stormwater Pollution Prevention Plan

As mandated by the 1987 amendments to the federal Clean Water Act, discharge of stormwater from developed areas is regulated under NPDES. In California, the State Water Resources Control Board (SWRCB) administers the NPDES program via the Regional Water Quality Control Boards (RWQCBs). In addition, the State Porter-Cologne Act requires the development of Basin Plans for drainage basins within California. The Basin Plans are implemented also through the NPDES program.

Prior to initiating construction for sites that are 10,000 square feet or larger, project applicants must submit an NOI to the SWRCB to be covered by the General Construction Activity Stormwater Permit. This requirement also applies to smaller sites that are part of a larger project. The General Permit requires the implementation of a SWPPP, which must be prepared before construction begins. The SWPPP will include:

- Specifications for BMPs that will be implemented during project construction to minimize the potential for accidental releases or contamination, and to minimize runoff from the construction areas, including storage and maintenance areas and building materials laydown areas.
- A description of a plan for communicating appropriate work practices to field workers.
- A plan for monitoring, inspecting and reporting any release of hazardous materials.
- Specifications for BMPs that will be incorporated into the project itself to minimize runoff of pollutants after the project has been completed.
- A description of a plan to monitor stormwater runoff after the project has been completed.

Local

Municipal Regional Stormwater NPDES Permit/C.3 Requirement

The San Francisco Bay RWQCB also has issued a Municipal Regional Stormwater NPDES Permit (Permit Number CAS612008). In an effort to standardize stormwater management requirements throughout the region, this permit replaces the formerly separate countywide municipal stormwater permits with a regional permit for 77 Bay Area municipalities. Under provisions of the NPDES Municipal Permit, projects that disturb more than 10,000 square feet are required to design and construct stormwater treatment controls to treat post-construction stormwater runoff. Amendments to the MRP require all of the post-construction runoff to be treated by using low impact development treatment controls, such as biotreatment facilities.

ENVIRONMENTAL CONSEQUENCES AND MITIGATION MEASURES

Significance Criteria

The proposed Project would have a significant environmental impact if it were to result in:

- Violation of any water quality standards or waste discharge requirements.
- Substantial depletion of groundwater supplies or substantial interference with groundwater recharge such that there would be a net deficit in acquifer volume or a lowering of the local groundwater table.
- Substantial alteration in the existing drainage pattern of the site or area, including through the alteration of the course of a stream or river, in a manner that would result in substantial on- or off-site erosion or siltation.
- Creation or contribution of runoff water that would exceed the capacity of existing or planned stormwater drainage systems or provide substantial additional sources of polluted runoff.
- Other substantial degradation of water quality.
- Placement of housing within a 100-year flood hazard area as mapped on a federal Flood Hazard Boundary or Flood Insurance Rate Map or other flood hazard delineation map.
- Placement within a 100-year flood hazard area of structures that would impede or redirect flood flows.
- Exposure of people or structures to a significant risk of loss, injury or death involving flooding, including flooding as a result of the failure of a levee or dam.

Impacts and Mitigation Measures

IMPACT 7.1: Violation of Water Quality Standards

POTENTIALLY SIGNIFICANT AND MITIGABLE IMPACT. Development of the site as proposed would entail construction activity that could be expected to have short-term, temporary adverse effects on local water quality, such as from erosion and siltation, illicit disposal of debris, and wash water from construction vehicles and equipment. This would represent a potentially significant impact.

Mitigation Measure Hydrology/Water Quality – 7.1: Preparation and Implementation of a SWPPP. The County of Alameda shall prepare and implement a SWPPP as required by the NPDES General Permit. The SWPPP shall be consistent with the terms of the General Permit, the Manual of Standards for Erosion and Sedimentation Control Measures by the Association of Bay Area Governments, policies and recommendations of the local urban runoff program (city and/or county) and the Staff Recommendations of the RWQCB. The SWPPP shall incorporate specific measures to reduce and treat runoff from developed areas of the site by means of vegetative buffers, grassy swales or other means, to be effective for the life of the Project, and shall incorporate BMPs to control sediment and erosion, both during the building process and in the long-term.

Resulting Level of Significance: Implementation of **Mitigation Measure Hydrology/Water Quality – 7.1** would reduce the potential impact on surface water resources to a level of less than significant.

Substantial Depletion of Groundwater Resources/Substantial Interference with Groundwater Recharge

NO IMPACT. The Project would result in a decrease in the amount of impervious surface at the proposed site, which would be considered a beneficial impact. However, within the context of the total area of the groundwater basins affected, the change in impervious surface would not be expected to affect groundwater recharge in a substantial way. The Project would not draw directly from local groundwater resources and would not contribute toward the depletion of any groundwater resources.

Substantial Alteration of Existing Drainage Patterns

NO IMPACT. The Project would not result in modifications to existing drainage patterns. Site plans would effectively link the site to the adjacent stormwater collection systems that is already in place, so as not to contribute to either on- or off-site siltation.

IMPACT 7.2: Exceed Capacity of Stormwater Infrastructure/Contribute Polluted Runoff

POTENTIALLY SIGNIFICANT AND MITIGABLE IMPACT. Although development of the site as proposed would not be expected to exceed the capacity of the stormwater infrastructure serving the site, it would entail construction activity that could be expected to have short-term, temporary adverse effects on local water quality, such as from erosion and siltation, illicit disposal of debris and wash water from construction vehicles and equipment. This would represent a potentially significant impact.

Mitigation Measure Hydrology/Water Quality – 7.2: Preparation and Implementation of a SWPPP. Implement Mitigation Measure Hydrology/Water Quality – 7.1 above.

Resulting Level of Significance: Implementation of **Mitigation Measure Hydrology/Water Quality – 7.2** would reduce the potential impact on surface water resources to a level of less than significant.

Development within 100-Year Flood Hazard Area

NO IMPACT. The Project would not result in the placement of any structures within a designated 100-Year Flood Hazard Area.

Exposure of People or Structures to Flood Hazards

NO IMPACT. The Project would not expose people or structures to a significant risk of loss, injury or death involving flooding.

8

BIOLOGICAL RESOURCES

ENVIRONMENTAL SETTING

Background

This chapter and the related analysis were prepared by LSA Associates. Biological resources were assessed through the review of existing information and the results of field surveys. The review provided information on biological resources in the project area and the distribution and habitat requirements of special-status species that have been recorded from or are suspected to occur in the vicinity, including: records on occurrences of special-status species and sensitive natural communities maintained by the CDFW's California Natural Diversity Database (CNDDB)[1]; the California Native Plant Society (CNPS) Inventory of Rare and Endangered Plants of California[2]; the U.S. Fish and Wildlife Service's (USFWS) IPaC Trust Resource Report 2015; the CDFW's list of special animals[3]; and a number of site-specific assessments. Field reconnaissance surveys were conducted to determine the suitability of the site to support sensitive resources. Details of the survey efforts are provided under the setting descriptions for the site.

Plant taxonomy and nomenclature in this document follows Baldwin et al. (2012) and common and scientific names for herpetofauna, birds, and mammals conform to Crother (2012), the American Ornithologists' Union (1998) *Check-list of North American Birds* and supplements, and Baker et al. (2003), respectively.

Local Physical Setting

Vegetation and Wildlife Habitat

The Project site and surrounding lands have been highly disturbed by past development at the site of the former Juvenile Hall. Most of the Project site has been graded and paved with roads and parking lots, or developed with structures and ornamental landscaping. Ruderal (weedy), non-native grassland occurs in vacant areas of the Project site. An unnamed drainage flows around the northwestern edge of the Project site before entering a culvert system under the existing parking lot. Where this drainage remains open, willow (*Salix* spp.) forms a dense stand of riparian scrub, which is the only remaining natural area near the Project site.

---

[1] California Department of Fish and Wildlife. Query of special-status species occurrences within 5 miles of the project site. May 1, 2015.

[2] California Native Plant Society. Inventory of Rare and Endangered Plants (online edition, v7-10b). www.cnps.org/inventory. Accessed September 21, 2015.

[3] California Department of Fish and Wildlife.Special Animals List. October, 2015.

The extent of development and past and ongoing disturbance limits the value of the site to wildlife. Species associated with the site are common in suburban habitat and include raccoon (*Procyon lotor*), Virginia opossum (*Didelphis virginiana*), Botta's pocket gopher (*Thomomys bottae*), mourning dove (*Zenaida macroura*), European starling (*Sturnus vulgaris*), house finch (*Haemorhous mexicanus*), and western fence lizard (*Sceloporus occidentalis*). The mature trees may be used for roosting and possibly nesting by raptors, but no evidence of any large nests was observed on the site.

Ruderal/Non-native Grassland

The ruderal/non-native grasslands are dominated by introduced ruderal forbs and annual grass species, including wild oats (*Avena* sp.), Italian wild rye (*Festuca perennis*), soft chess (*Bromus hordaceous*), Italian thistle (*Carduus pycnocephalus*), mustard (*Brassica* sp.), prickly lettuce (*Lactuca seriola*), foxtail barley (*Hordeum murinum*), bull thistle (*Cirsium vulgare*), Italian thistle (*Carduus pycnocephalus*), Harding grass (*Phalaris aquatica*), fennel (*Foeniculum vulgare*), field bindweed (*Convolvulus arvensis*), mallow (*Malva* sp.), everlasting (*Gnaphalium* sp.), pampas grass (*Cortaderia jubata*), Himalayan blackberry (*Rubus armeniacus*), plantain (*Plantago* sp.), bird's foot trefoil (*Lotus corniculatus*), Russian thistle (*Salsola tragus*), annual yellow sweetclover (*Melilotus indicus*), and bristly ox-tongue (*Helminthotheca echioides*). Native plants observed in the fields include coyote brush (*Baccharis pilularis*), horseweed (*Erigeron canadensis*), and California poppy (*Eschscholzia californica*). A few ornamental trees (see below) occur within periphery of the fields. Several stockpiles of dirt are scattered within the two open fields.

Wildlife species or wildlife signs observed in the ruderal/non-native habitat during the August 2015 field survey consists of wild turkey (*Meleagris gallopavo*; including young), lesser goldfinch (*Carduelis psaltria*), California towhee (*Melozone crissalis*; including young), mourning dove, Botta's pocket gopher burrows, black-tailed jackrabbit (*Lepus californicus*) scat, and mule deer (*Odocoileus hemionus*) scat.

Trees

A total of 103 trees were surveyed on or near the proposed Project site, including 97 within the Project site and 6 in the County right-of-way (ROW) of Fairmont Drive.[4] Trees on the Project site include a mix of ornamental and native trees, such as eucalyptus (*Eucalyptus* spp.), sweet gum (*Liquidambar styraciflua*), blackwood acacia (*Acacia melanoxylon*), myoporum (*Myoporum laetum*), American arborvitae (*Thuja occidentalis*), Italian buckthorn (*Rhamnus alaternus*), date palm (*Phoenix* sp.), and native coast live oak (*Quercus agrifolia*). Understory vegetation includes ornamental shrubs, such as cotoneaster (*Cotoneaster* sp.) and bottlebrush (*Callistemon* sp.), as well as non-native annual grassland species. Patches of native purple needle grass (*Stipa pulchra*) were also observed among the grassland near the trees in the southern portion of the Project site.

Wildlife observed near the trees during the August 2015 field survey consist of Nuttall's woodpecker (*Picoides nuttallii*), western scrub-jay (*Aphelocoma californica*), American crow (*Corvus brachyrhynchos*), northern mockingbird (*Mimus polyglottos*; including young), Anna's hummingbird (*Calypte anna*), mourning dove, California towhee, and house finch.

Seasonal Wetland/Freshwater Marsh

A rectangular-shaped area adjacent to a ruderal/non-native grassland field near the northern boundary of the Project site supports a potentially jurisdictional seasonal wetland (**Figure 8.1**). Plant species

[4] LSA Associates, Inc. Tree Survey Report – Camp Sweeney, San Leandro, Alameda County, California. December 15, 2015.

observed in this seasonal wetland include creeping wild rye (*Elymus triticoides*), prostrate knotweed (*Polygonum aviculare*), willow saplings, and bristly ox-tongue. This feature may be considered a wetland subject to Corps jurisdiction. This potentially jurisdictional seasonal wetland is located immediately adjacent to the proposed visitor's parking lot and would be avoided.

A potentially jurisdictional drainage ditch with an associated storm drain outlet, headwall, and a red willow (*Salix laevigata*) tree is situated between the proposed visitor's parking lot and the North Access Road (see **Figure 8.1**). This area was roughly mapped in the field by mapping the top of the bank around the ditch; the actual potentially jurisdictional portion of this exposed area is smaller. Construction of the new access road to the proposed visitor's parking lot would avoid this area with a 5-foot setback.

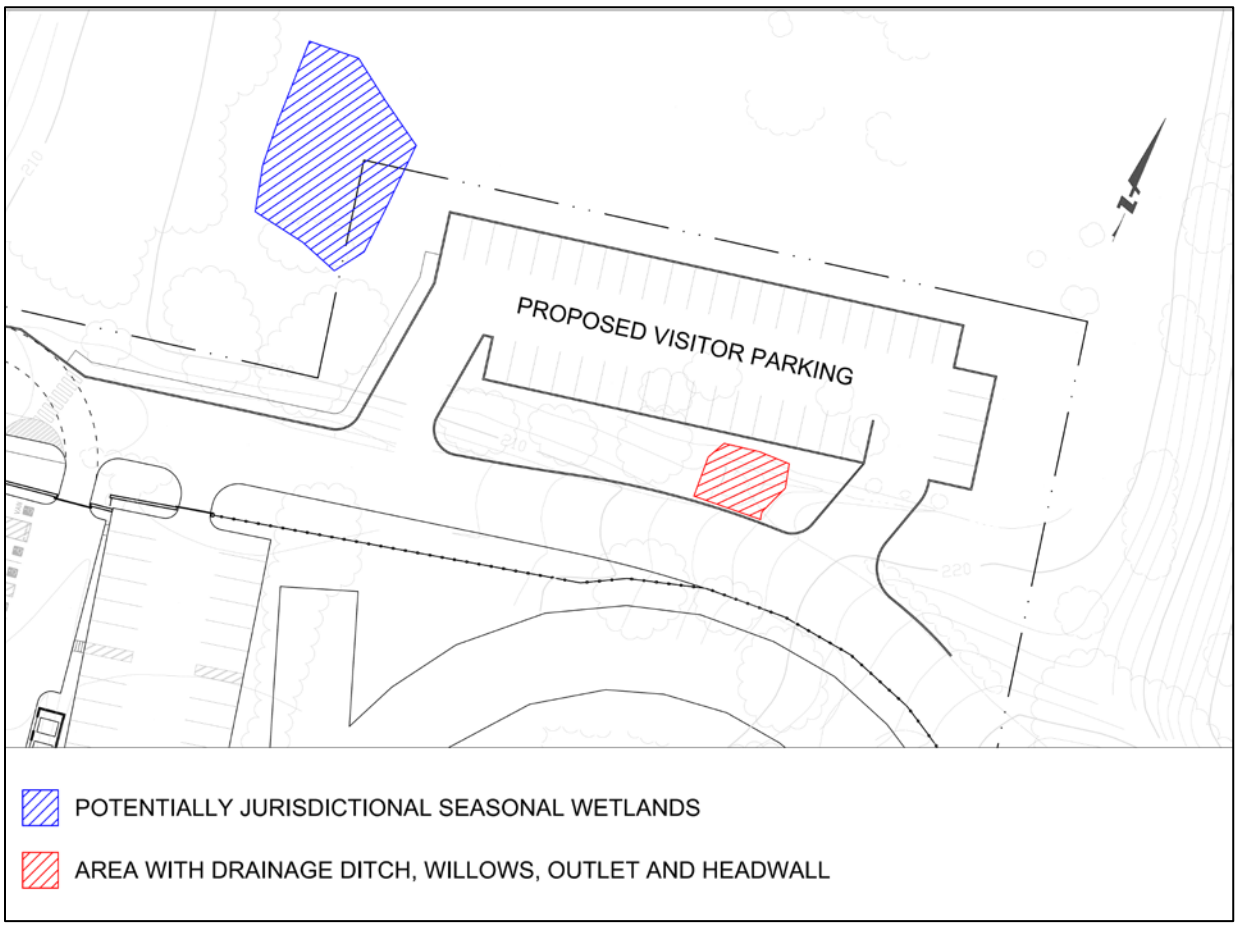

Figure 8.1. Potential Seasonal Wetland

North of the Project site, the northern portion of this same ruderal grassland field supports freshwater marsh habitat with cattail (*Typha* sp.) and rush (*Scirpus* sp.). This freshwater marsh habitat is contiguous with the larger freshwater marsh habitat north of the site. This freshwater marsh is located offsite.

Riparian Willow Scrub

Willow scrub and freshwater marsh vegetation occurs along the unnamed drainage north of the Project site. Surface water in the drainage supports several wetland indicator species, including iris-leaved rush (*Juncus xiphioides*), umbrella sedge (*Cyperus eragrostis*), Himalayan blackberry, cattail, and willow. The dense thicket of willow riparian scrub and freshwater marsh is the only sensitive habitat nearby for native wildlife, providing dense cover and nesting substrate for a number of bird species.

Special-Status Species

For the purposes of the analysis contained in this document, special-status species are defined as follows:

- Species that are listed, formally proposed, or designated as candidates for listing as threatened or endangered under the federal Endangered Species Act (ESA) or California ESA.
- Plant species assigned to California Rare Plant Rank (CRPR) 1A, 1B, or 2.
- Animal species designated as Species of Special Concern or Fully Protected Species by the CDFW.
- Species that meet the definition of rare, threatened, or endangered under Section 15380 of the *CEQA Guidelines*.
- Species considered as a taxon of special concern by local agencies.

Plants

Based on the results of the database search and literature review, LSA identified 14 special-status plant species as potentially occurring in the site vicinity (**Table 8.1**), but none have been observed or are likely to occur on the property due to the absence of suitable habitat and extent of past disturbance. No special-status plant species were observed on the Camp Sweeney Project site or the overlapping Juvenile Justice Center site during the July 14, 2000 and August 6, 2015 site visits. Eight of the species on this list (pallid manzanita [*Arctostaphylos pallida*], Mt. Diablo fairy lantern [*Calochortus pulchellus*], Presidio clarkia [*Clarkia franciscana*], Condon's tarplant [*Centromadia parryi* ssp. *congdonii*], Brewer's dwarf flax [*Hesperolinon breweri*], Kellogg's horkellia [*Horkelia cuneata* ssp. *sericea*], most beautiful jewel flower [*Streptanthus albidus* ssp. *peramoenus*], and caper-fruited tripidocarpum [*Tropidocarpum capparideum*]) were eliminated from consideration because the habitats that support them are absent from the site. The remaining six species (western leatherwood [*Dirca occidentalis*], big-scale balsamroot [*Balsamorhiza macrolepis* var. *macrolepis*], Diablo helianthela [*Helianthella castanea*], fragrant fritillary [*Fritillaria liliacea*], Santa Cruz tarplant [*Holocarpha macradenia*], and showy Indian clover [*Trifolium amoenum*]) are unlikely to occur due to the lack of suitable habitat. The non-native grasslands and woody vegetation on the site are, at best, a marginal example of suitable habitat for these species due to its severely disturbed nature. Therefore, special-status plant species are highly unlikely to occur on the project site.

TABLE 8.1: SPECIAL-STATUS PLANT SPECIES THAT HAVE THE POTENTIAL TO OCCUR IN THE PROJECT VICINITY

Species Name	Federal/State Status	Habitat Characteristics (Potential Occurrence on Site)
Pallid manzanita (*Arctostaphylos pallida)*	FT/SE/List 1B	Chaparral and woodlands usually in siliceous shale soils; blooms December–March (none)
Big-scale balsamroot (*Balsamorhiza macrolepis* var. *macrolepis*)	–/–/List 1B	Thin, rocky soil, sometimes on serpentine, grasslands and woodlands; blooms March–June (none)
Mt. Diablo fairy-lantern *(Calochortus pulchellus)*	–/–/List 1B	Openings in chaparral, coastal scrub, and associated grasslands; blooms April–June (none)
Congdon's tarplant *(Centromadia parryi* ssp. *congdonii)*	–/–/List 1B	Alkaline or saline clay soil in annual grasslands; blooms June–November (none)
Presidio clarkia *(Clarkia franciscana)*	FE/SE/List 1B	Serpentine soils in grasslands and coastal scrub; blooms May–July (none)

Species Name	Federal/State Status	Habitat Characteristics (Potential Occurrence on Site)
Western leatherwood *(Dirca occidentalis)*	–/–/List1B	Occurs in variety of forest and woodland habitats; blooms January–April (none)
Fragrant fritillary *(Fritillaria liliacea)*	–/–/List 1B	Heavy soil, often on serpentine, in grasslands, northern coastal scrub, redwood forest; blooms February–April (none)
Diablo helianthella *(Helianthella castanea)*	–/–/List 1B	Thin, rocky soil, grassy hillsides, 500-4,000 feet; foothill woodland, chaparral; blooms April–May (none)
Brewer's dwarf flax *(Hesperolinon breweri)*	–/–/List 1B	On serpentine soil, chaparral and oak woodland; blooms May–July (none)
Santa Cruz tarplant *(Holocarpha macradenia)*	FT/SE/List 1B	Sandy clay soils in Coastal Prairie and Non-native Grassland; blooms June–October (none)
Kellogg's horkellia *(Horkelia cuneata* ssp. *sericea)*	–/–/List 1B	Coniferous forests and coastal scrub; blooms April–September (none)
Most beautiful jewel flower *(Streptanthus albidus* ssp. *peramoenus)*	–/–/List 1B	Serpentine soils in grasslands and chaparral; blooms April–June (none)
Showy Indian clover *(Trifolium amoenum)*	FE/–/List 1B	Low, rich fields and swales; blooms April–June (none)
Caper-fruited tropidocarpum *(Tropidocarpum capparideum)*	–/–/List 1B	Blooms March–April (none)

STATUS DESIGNATIONS:
FE = Listed as endangered under the federal ESA.
FT = Listed as threatened under the federal ESA.
SE = Listed as endangered under the California ESA.
CRPR List 1B = Plants rare, threatened, or endangered in California and elsewhere
Source: LSA Associates, Inc, 2015.

Animals

Based on a review of the information sources listed above and LSA's habitat observations during the 2000 and 2015 site visits, LSA identified 17 special-status animal species as potentially occurring in the site vicinity (**Table 8.2**). Species associated with tidal marsh and other Bay shoreline habitats were eliminated from consideration due to the lack of habitat. The habitat suitability analysis conducted in March 2002, as well as focused surveys for California red-legged frog (*Rana draytonii*) and western pond turtle (*Emys marmorata*), resulted in no observations of these species. The Project site is located approximately 2.3 miles southwest of the designated Alameda whipsnake (*Masticophis lateralis euryxanthus*) critical habitat. Due to the distance from presumed occupied habitat and the lack of suitable scrub habitat on or adjacent to the project site and its isolation from occupied habitat, Alameda whipsnake is unlikely to occur the Project site. While the site does not provide suitable nesting habitat for golden eagle (*Aquila chrysaetos*), peregrine falcon (*Falco peregrinus*), or burrowing owl (*Athene cunicularia*), the trees on or adjacent to the site provide suitable habitat for nesting loggerhead shrike (*Lanius ludovicianus*) and white-tailed kite (*Elanus leucurus*). Additional information on California red-legged frog, western pond turtle, special-status bird species, and special-status bat species is summarized below. The remaining ten species are not expected to occur based on the absence of habitat and are not discussed further.

California Red-Legged Frog. This subspecies is considered a CSC by the CDFW and was listed as a threatened species by the USFWS in 1996. The frog is typically found in or near permanent pools along

streams and occasionally in ponds with dense emergent or riparian vegetation. The freshwater marsh and drainage north of the site provides suitable habitat for the California red-legged frog, but there are no known records of red-legged frogs at this location.

Western Pond Turtle. This species has no legal protective status under the state or federal Endangered Species Acts, but is recognized as a CSC by the CDFW. The turtle typically occurs in ponds and streams with permanent pools used as retreat habitat. The freshwater marsh and drainage north of the site potentially provides suitable migration and permanent habitat for the western pond turtle. However, no western pond turtles are believed to occur on or near the Project site due to the absence of suitable breeding and retreat habitat.

Special-Status Birds and Protected Bird Nests. One or more special-status bird species or other more common bird species could nest on the site, all of which when in active use would be protected by the MBTA and/or California Fish and Game Code. Trees and large shrubs on and adjacent to the site provide potential nesting habitat for white-tailed kite and loggerhead shrike. The trees and shrubs also provide suitable nesting habitat for more common birds, such as western scrub-jay (*Aphelocoma californica*), northern mockingbird (*Mimus polyglottos*), red-tailed hawk, great horned owl, and American kestrel. No active bird nests were observed during any of the field surveys but the presence of juvenile northern mockingbirds during the August 2015 survey suggests that this species likely nested nearby. Focused surveys would be necessary to confirm the presence of active nests. The site does not provide habitat for the California Condor as the current range of this bird consists of California's southern coastal mountain ranges from Big Sur to Ventura County and east through the Transverse Range and Southern Sierra Nevada.

Special-Status Bats and Protected Bat Roosts. Pallid bat (*Antrozous pallidus*), western mastiff bat (*Eumops perotis californicus*), and Townsend's big-eared bat (*Plecotus townsendii townsendii*) are recognized as CSC by the CDFW. They typically occur in caves, crevices, and abandoned buildings or mines. Townsend's big-eared bat, in particular, are highly sensitive to human disturbance making their presence in the on-site buildings unlikely. No evidence of any bat roosting activity was observed on the site, but no focused surveys were conducted. Since new roosts could become established prior to construction activities near suitable roosting habitat or demolition of buildings, preconstruction surveys are recommended.

TABLE 8.2: SPECIAL-STATUS ANIMAL SPECIES THAT HAVE THE POTENTIAL TO OCCUR IN THE PROJECT VICINITY

Species Name	Federal/State Status	Habitat Characteristics (Potential Occurrence on Site)
AMPHIBIANS / REPTILES		
California tiger salamander *(Ambystoma californiense)*	FT/ST, CSC	Grassland and open woodlands with temporary or permanent water (unlikely; suitable upland habitat present, but no known breeding ponds present in the vicinity)
California red-legged frog (*Rana draytoni)*	FT/CSC	Permanent ponds, pools and streams in riparian corridors and surrounding uplands (unlikely, but may inhabit drainage channel north of site)
Western pond turtle *(Emys marmorata)*	–/CSC	Ponds, marshes, rivers and streams (unlikely, but may inhabit drainage channel north of site)
Alameda whipsnake (*Masticophis lateralis euryxanthus)*	FT/ST	Coastal scrub and chaparral and surrounding woodlands and grasslands (unlikely since occupied scrub habitat is located more than 2 miles to the northeast)
BIRDS		
Golden eagle *(Aquila chrysaetos)*	–/CP	Open mountains, foothills and canyons (may forage over site; no nesting habitat present)

Species Name	Federal/State Status	Habitat Characteristics (Potential Occurrence on Site)
Burrowing owl *(Athene cunicularia)*	–/CSC	Open grassland and fields, farms and ruderal areas(may pass through site; no suitable burrow sites observed during August 2015 reconnaissance survey)
Northern harrier *(Circus cyaneus)*	–/CSC	Marshes, fields and grassland (unlikely to nest or forage due to limited grassland habitat)
White-tailed kite *(Elanus leucurus)*	–/CP	Open foothills, marshes and grassland (may nest/forage onsite)
Peregrine falcon *(Falco peregrinus)*	DE/DE, CP	Canyons, mountains, open grassland (may forage over site, but no nesting habitat present)
Loggerhead shrike *(Lanius ludovicianus)*	–/CSC	Open habitat with scattered trees, shrubs and other perches (may nest and/or forage on the site)
California black rail *(Laterallus jamaicensis coturniculus)*	–/ST, CP	Coastal salt marsh (no suitable habitat present)
California clapper rail *(Rallus longirostris obsolitus)*	FE/SE, CP	Coastal salt marsh (no suitable habitat present)
MAMMALS		
Pallid bat (*Antrozous pallidus)*	–/CSC	Roosts in caves, crevices, unused structures (unlikely; may roost in on-site buildings)
Western mastiff bat (*Eumops perotis californicus)*	–/CSC	Caves and crevices in arid areas with high cliffs (unlikely, may roost in on-site buildings)
Townsend's big-eared bat (*Corynorhinus townsendii)*	–/CT, CSC	Cave, mines, and abandoned buildings (unlikely; may roost in on-site buildings)
Salt marsh harvest mouse (*Reithrodontomys raviventris)*	FE/SE, FP	Coastal salt marsh (no suitable habitat present)
San Joaquin kit fox (*Vulpes macrotis mutica)*	FE/ST	Akali sink, saltbrush scrub, grassland, oak savanna (very unlikely; isolated and limited grasslands precludes presence; species extremely rare in region)

STATUS DESIGNATIONS:
FE = Listed as endangered under the federal ESA
FT = Listed as threatened under the federal ESA
DE = Delisted as endangered
SE = Listed as endangered under the California ESA
ST = Listed as threatened under the California ESA
CT = Candidate threatened
CP = California fully protected species
CSC = Considered a Species of Special Concern by the CDFW
Source: LSA Associates, Inc, 2015.

Potentially Jurisdictional Wetlands and Waters of the U.S.

Potential jurisdictional features on the Project site include a seasonal wetland along the northwest boundary of the proposed visitor's parking lot and an exposed ditch with an associated headwall, outlet, and willow tree (see **Figure 8.1**).

The biological assessment in 2000 provided a preliminary assessment of the extent of potential jurisdictional wetlands on the former site of the Juvenile Hall site (LSA 2000). The delineation and preliminary assessment were not verified by the Corps, but provide an indication of the likely extent of jurisdictional wetlands on and adjacent to the project site.

Based on the results of the 2000 assessment, a willow riparian/freshwater marsh occurs along a drainage north of the project site.

Methods

To identify special-status plant and animal species potentially occurring within the Project site and the vicinity, LSA Associates searched the CNDDB, USFWS IPaC Trust Resource Report, and CNPS Inventory of Rare and Endangered Plants of California for known occurrences within the USGS 7.5-minute Hayward quadrangle, in which the site is located, as well as the adjacent nine quadrangles.

LSA Associates conducted several biological resource field surveys on or within portions of the Project site, including a reconnaissance-level survey of the Project site on August 6, 2015; a survey for potentially jurisdictional wetlands on September 23, 2015; and a tree survey[5] on November 5, 2015. LSA Associates also conducted previous surveys at the overlapping Juvenile Justice Center site on July 14, 2000, to look for sensitive habitats and evidence of occupation by special-status species or sensitive habitats, as well as a follow-up site visit on November 1, 2000, to refine the extent of wetlands and drainages on the Juvenile Justice Center site.

LSA Associates conducted the field reconnaissance surveys by walking throughout the site in search of potential biological resources associated with the site, such as the potential presence of special-status species and/or sensitive habitats (e.g., wetlands and drainages). The potential presence of rare, threatened, or endangered species was determined based on an evaluation of the habitat types present and the CNDDB records and other records from the vicinity. The field work also investigated the presence of waters of the United States/waters of the State (including adjacent wetlands) that would be subject to regulation under Section 404 of the Clean Water Act and/or California Porter-Cologne Water Quality Control Act. All wildlife and plant species observed during the surveys were recorded in field notes.

LSA Associates conducted the tree survey by recording the species, condition, and trunk diameter at breast height (in inches as measured 4.5 feet above natural grade) of each tree occurring within or immediately adjacent to the proposed Project site. If an individual tree had multiple trunks, the diameters of all the trunks were totaled. The location of all surveyed trees was registered on a base map of the proposed project.

REGULATORY SETTING

Federal and State Regulations

Federal Endangered Species Act

The federal ESA protects listed animal species from harm or “take” which is broadly defined as to harass, harm, pursue, hunt, shoot, wound, kill, trap, capture, collect, or attempt to engage in any such conduct. Take can also include habitat modification or degradation that results in death or injury to a listed species. An activity can be defined as “take” even if it is unintentional or accidental. Listed plant species are provided less protection than listed wildlife species.

[5] LSA Associates, Inc. Tree Survey Report – Camp Sweeney, San Leandro, Alameda County, California. December 15, 2015.

The USFWS has jurisdiction over federally listed threatened and endangered wildlife and plant species under the ESA. The USFWS also maintains lists of proposed and candidate species. Species on these lists are not legally protected under the ESA, but may become listed in the near future and are often considered in their review of a project.

California Endangered Species Act

The California ESA is administered by CDFW and prohibits the take of plant and animal species identified as either threatened or endangered in the State of California by the Fish and Game Commission (Fish and Game Code Section 2050-2089). "Take" means hunt, pursue, catch, capture, or kill or attempt to hunt, pursue, catch, capture or kill. Sections 2081 and 2080.1 of the California ESA allow CDFW to authorize exceptions to the prohibition of take of the State-listed threatened or endangered plant and animal species for purposes such as public and private development.

California Environmental Quality Act

Section 15380(b) of the *CEQA Guidelines* provides that a species not listed on the federal or State lists of protected species may be considered rare or endangered if the species can be shown to meet certain specified criteria. These criteria have been modeled after the definitions in the ESA and California ESA and the section of the California Fish and Game Code dealing with rare or endangered plants or animals. This section was included in the guidelines primarily to deal with situations in which a public agency is reviewing a project that may have a significant effect on a species that has not yet been listed by either the USFWS or CDFW.

Clean Water Act

Under Section 404 of the Clean Water Act, the Corps is responsible for regulating the discharge of fill material into waters of the United States. Waters of the United States and their lateral limits are defined in 33 CFR Part 328.3 (a) and include streams that are tributary to navigable waters and their adjacent wetlands. Wetlands that are not adjacent to waters of the U.S. are termed isolated wetlands and, depending on the circumstances, may also be subject to Corps jurisdiction.

In general, a Corps permit must be obtained before placing fill in wetlands or other waters of the United States. The type of permit depends on the acreage involved and the purpose of the proposed fill. Minor amounts of fill can be covered by a Nationwide Permit. An Individual Permit is required for projects that result in more than a minimal impact on jurisdictional areas.

California Water Quality and Waterbody Regulatory Programs

Pursuant to Section 401 of the federal Clean Water Act, projects that are regulated by the Corps must obtain water quality certification from the RWQCB. This certification ensures that the project will meet State water quality standards. The RWQCB has a policy of no-net-loss of wetlands and typically requires the identification of mitigation for all impacts on wetlands before it will issue water quality certification.

When reviewing applications, the RWQCB focuses on ensuring that projects do not adversely affect the beneficial uses associated with waters of the State. Generally, the RWQCB defines beneficial uses to include all of the resources, services, and qualities of aquatic ecosystems and underground aquifers that benefit the State. For most construction projects, the RWQCB seeks to protect these beneficial uses by requiring the integration of water quality control measures into projects that will result in discharge into waters of the State. The RWQCB typically requires the use of construction and post-construction BMPs to protect and maintain water quality.

Migratory Bird Treaty Act

The federal Migratory Bird Treaty Act (MBTA) prohibits the taking, hunting, killing, selling, purchasing, etc. of migratory birds, parts of migratory birds, or their eggs and nests. As used in the MBTA, the term "take" is defined as "to pursue, hunt, shoot, capture, collect, kill, or attempt to pursue, hunt, shoot, capture, collect, or kill, unless the context otherwise requires." Most bird species native to North America are protected under this act.

California Fish and Game Code

CDFW is also responsible for enforcing the California Fish and Game Code, which contains several provisions potentially relevant to construction projects. For example, Section 1600 of the Fish and Game Code governs the issuance of Streambed Alteration Agreements. Streambed Alteration Agreements are required whenever project activities substantially divert or obstruct the natural flow or substantially change the bed, channel, or bank of any river, stream, or lake designated as such by CDFW.

The Fish and Game Code also lists animal species designated as Fully Protected or Protected, which may not be taken or possessed at any time. CDFW does not issue licenses or permits for take of these species except for necessary scientific research or live capture and relocation pursuant to a permit for the protection of livestock. Fully Protected species are listed in Sections 3511 (birds), 4700 (mammals), 5050 (reptiles and amphibians), and 5515 (fish) of the Fish and Game Code, while Protected amphibians and reptiles are listed in Chapter 5, Sections 41 and 42.

Section 3503 of the Fish and Game Code prohibits the take, possession, or needless destruction of the nest or eggs of any bird. Subsection 3503.5 specifically prohibits the take, possession, or destruction of any birds in the orders Falconiformes (hawks and eagles) or Strigiformes (owls) and their nests. These provisions, along with the federal MBTA, essentially serve to protect nesting native birds. Non-native species, including European starling, house sparrow, and rock pigeon, are not afforded any protection under the MBTA or California Fish and Game Code.

California Rare Plant Ranks

Special-status plants in California are assigned to one of five "California Rare Plant Ranks" by a collaborative group of over 300 botanists in government, academia, non-governmental organizations, and the private sector. This effort is jointly managed by the CDFW and the CNPS. The five CRPR currently recognized by the CNDDB are:

- Rare Plant Rank 1A – presumed extinct in California
- Rare Plant Rank 1B – rare, threatened, or endangered in California and elsewhere
- Rare Plant Rank 2 – rare, threatened, or endangered in California but more common elsewhere
- Rare Plant Rank 3 – a review list of plants about which more information is needed
- Rare Plant Rank 4 – a watch list of plants of limited distribution

All of the plant species on List 1A, List 1B, and List 2 meet the requirements of Section 1901, Chapter 10 (Native Plant Protection Act) or Sections 2062 and 2067 (California ESA) of the Fish and Game Code, and are eligible for State listing. Therefore, plants appearing on Lists 1A, 1B, or 2 are considered to meet CEQA's Section 15380 criteria and effects to these species would be considered significant for the purposes of CEQA.

Special-Status Natural Communities

The CDFW tracks the occurrences of natural plant communities that are of limited distribution statewide or within a county or region and are often vulnerable to environmental effects of projects. In the most

recent list of vegetation alliances/natural communities recognized in California (2010), alliances with a NatureServe State ranking code of S1 through S3 are considered to be highly imperiled and impacts on stands of these vegetation types/natural communities may be considered significant under CEQA. These special-status natural communities are sometimes considered by lead or trustee agencies, but generally are not afforded the same protection as CNPS List 1B and 2 plant species. Many special-status natural communities support special-status plants and animals and are addressed under CEQA as habitat for those species.

Most types of wetlands and riparian communities are also considered special-status natural communities due to their limited distribution in California. While impacts on such communities would be considered significant under CEQA, wetlands and riparian communities are also afforded legal protection under Sections 401 and 404 of the federal Clean Water Act and Section 1602 of California Fish and Game Code (see above). Project proponents impacting wetlands and/or riparian communities must therefore obtain permits from the Corps, RWQCB, and/or CDFW, as well as comply with CEQA. As such, these communities are typically addressed separately from non-jurisdictional special-status natural communities when evaluating project impacts under CEQA.

Local Policy Setting

County of Alameda

Castro Valley Plan

The Castro Valley Plan (2012) identifies the following goals, policies, and actions related to biological resources:

Goal 7.1-1: *Protect Castro Valley's native wildlife through conservation and restoration of natural habitat.*

Policy 7.1-1: *Major Wildlife Corridors Protection. Protect the major wildlife corridors that run through or are adjacent to Castro Valley:*

(1) the corridor along the East Bay Hills in the forest and chaparral between major interstate highways; and

(2) along creeks.

Policy 7.1-2: *Comprehensive Habitat Preservation. Preserve a continuous band of open space consisting of a variety of plant communities and wildlife habitat to provide comprehensive rather than piecemeal habitat conservation.*

Policy 7.1-3: *Open Space Preservation. Preserve the undeveloped areas designated as open space within planned unit developments as permanent open space.*

Policy 7.1-4: *Open Space Objectives. Require that open space provided as part of a development project be designed to achieve multiple objectives, including but not limited to: recreation, scenic values, habitat protection, and public safety.*

Policy 7.1-5: *Riparian Habitat. New development shall not disturb any riparian habitat.*

Action 7.1-1: *Biological Resources Overlay Zone. Explore the possibility of a biological resources overlay zone delineating high, moderate, and low priority areas for habitat preservation, to ensure maximum protection of biological resources.*

- *Require discretionary review for all development applications on properties within the high priority biological resources overlay zone, and for large sites over two acres in size with moderate or low priority biological resources. Discretionary review could include one or more of the following: environmental assessment per the California Environmental Quality Act; site plan and development review; and/or the application of Board policy or other ordinance requirements.*
- *Establish in the ordinance that on lands with biological resources, new development is not necessarily entitled to achieve the maximum density allowed by the underlying zoning. An environmental assessment may be required, prepared by a qualified biologist, which shall be the basis for establishing development constraints specific to the property in question. Development intensity may be required to be reduced up to 50 percent of the intensity allowed by the underlying zoning, depending on the extent and value of the biological resources on the site.*
- *Establish thresholds of review for different types of projects, and different types of waterways. For example, a comprehensive environmental assessment should be required for new subdivisions, whereas minor improvements such as fences or decks may be exempt from special review if they meet specific standards.*

Action 7.1-2: *Biological Resources Maps and Inventories. Maintain maps and inventories of biological resources to use when conducting site plan and development review. Update these resources regularly to include new information from site surveys that are conducted in the planning area.*

Action 7.1-3: *Design Guidelines for Biological Resource Zones. Establish guidelines to ensure that development planned on or adjacent to high and moderate priority areas designated on the Figure 7-2, Biological Resources Overlay Zone will be designed to minimize impacts on sensitive resources and habitat areas.*

- *Apply these guidelines through the Planning Department's project review process.*
- *Include information about ways in which special-status plant and wildlife populations on private properties can be protected over time.*
- *Specify that watercourses and areas dominated by native trees and shrubs be left undisturbed by development to the maximum extent feasible.*

Action 7.1-6: *Riparian Woodlands and Wetlands Mitigation. Discourage loss of riparian woodlands and seasonal and perennial wetlands, including ponds, by requiring replacement mitigation at a ratio to be determined by the value of the habitat to be lost. To facilitate replacement mitigation, the County shall support the creation of wetland or other habitat mitigation banks.*

Action 7.1-7: *Preservation and Protection of Riparian Vegetation. Consider adopting an ordinance to preserve and protect riparian vegetation, with exceptions for clearing hazards, clearing blocked channels, and other activities necessary for public safety.*

Action 7.1-9: *Connect Open Space to Large Habitat Areas. In the review of new subdivisions and other new development, require the preservation of adequately wide strips of undisturbed land to connect larger tracts of natural habitat or areas with biological resources.*

GOAL 7.2-1: *Preserve and restore creek channels, and riparian habitat to protect and enhance wildlife and aquatic-life corridors, flood protection, and the quality of surface water and groundwater.*

Policy 7.2-1: *Creek and Flood Channels. Protect all creeks and engineered channels that traverse the urbanized area of Castro Valley.*

Policy 7.2-2: *Creek Setbacks. Establish adequate creek setbacks to maintain and where appropriate enhance important stream functions.*

Policy 7.2-3: *Creek Uses. Manage creeks for multiple uses including: scenic quality, recreation, water quality, soil conservation, groundwater recharge, and wildlife habitats.*

Policy 7.2-4: *Natural/Nonstructural Creek Drainage Systems. Use and reclaim or fully restore natural or nonengineered creek drainage systems to the maximum extent feasible and look for opportunities to convert structural stormwater drainage systems to natural or semi-natural creeks.*

Action 7.2-1: *Alameda County's Watercourse Protection Ordinance. Revise the County's Watercourse Protection Ordinance to ensure maximum protection of creeks and adjacent riparian habitat by requiring new development to provide sufficient setbacks and rights-of-way to meet the County's objectives for storm drainage, flood control, habitat protection, recreation, and other appropriate uses. Include the following provisions:*

- *Do not allow grading or structures within a creek bed, unless they are required to prevent flooding and erosion that pose an imminent hazard to public health and safety, or to prevent serious property damage;*
- *Require the preservation and/or restoration of natural drainage and habitat to the maximum extent feasible, without causing further acceleration of water flow or erosion further downstream;*
- *Increase the setback for habitable structures to ensure adequate distance between structures and an open creek channel.*
- *Require construction methods that minimize flooding and erosion;*
- *Consider limiting the amount of impervious surface within 100 feet of the top of the creekbed channel to limit erosion and acceleration of water flow into the creek channel;*
- *Establish basic standards for development in or near creekside areas, in order to clarify and expedite the permitting process;*
- *Require preparation of a creek protection plan for new construction or significant expansion on creekside properties. The creek protection plan shall: be prepared by qualified professionals; establish areas most suitable for construction; and identify construction procedures that will minimize impacts in creek channels and riparian vegetation.*

GOAL 7.3-1: *Maintain, preserve, and enhance trees and vegetation to provide environmental and aesthetic benefits.*

Policy 7.3-1: *Alameda County Tree Ordinance. Continue to implement and enforce the Alameda County Tree Ordinance to protect trees in the public right-of-way.*

Policy 7.3-2: *Native Environment. Maintain and enhance the existing environment by preserving existing native trees and plants whenever feasible, replacing trees on-site, and adding trees and other vegetation in the public right-of-way.*

County of Alameda Watercourse Protection Ordinance

The Alameda County Tree Protection Ordinance (General Ordinance Code Section 13.12.320) describes setbacks and criteria for watercourse protection based on the 100-year flood elevation. Typically, setbacks are a minimum 20 feet from the top of bank of the watercourse.

County of Alameda Tree Ordinance

The Alameda County Tree Protection Ordinance (General Ordinance Code Section 12.11.110) requires a tree encroachment permit prior to the removal of any tree situated within the Alameda County ROW. The application for an encroachment permit must be filed with the Alameda County Public Works Agency's Director. The ordinance allows discretionary action on the part of the Alameda County Public Works Agency to impose on the permittee a reasonable mitigation effort. Mitigation might include efforts to replace an existing tree or trees with one or more trees of a type consistent with the character of the surrounding neighborhood.

ENVIRONMENTAL CONSEQUENCES AND MITIGATION MEASURES

Significance Criteria

Criteria have been established in determining the significance of potential impacts on biological resources. The CEQA Guidelines identify potentially significant environmental effects on biological resources to include:

- A substantial adverse effect, either directly or through habitat modifications, on any special-status species;
- A substantial adverse effect on any riparian habitat or other sensitive natural community identified in local or regional plans, policies or regulations, or by the CDFW or USFWS.
- A substantial adverse effect on federally protected wetlands as defined by Section 404 of the Clean Water Act through direct removal, filling, hydrological interruption or other means;
- Interfere substantially with the movement of any native resident or migratory fish or wildlife species or with established native resident or migratory wildlife corridors, or impede the use of native wildlife nursery sites;
- Conflict with any local policies or ordinances protecting biological resources, such as a tree preservation policy or ordinance.
- Conflict with the provisions of an adopted Habitat Conservation Plan; Natural Community Conservation Plan; or other approved local, regional or state habitat conservation plan.

Impacts and Mitigation Measures

IMPACT 8.1: Special-Status Species

POTENTIALLY SIGNIFICANT AND MITIGABLE IMPACT. The proposed Project would result in the loss of potential nesting habitat for loggerhead shrike, white-tailed kite, and other birds, whose active nests are

protected by the MBTA and/or California Fish and Game Code. Given the possibility that nests could be established on the site before construction is initiated, this impact is considered potentially significant and would require a preconstruction survey and appropriate mitigation if nests are encountered. Protection of any active nests until the nest is inactive and/or the young have fledged would be adequate mitigation.

Although considered unlikely, special-status bat species could roost in the existing Camp Sweeney buildings and gymnasium building. Surveys conducted prior to demolition activities would be necessary to confirm presence or absence of active bat roosts. Effective methods for relocation or mitigation prior to demolition would be required if active roosts are encountered.

No special-status plant species are likely to occur on the site due to the extent of past grading and development and therefore, no impacts on special-status plant species are anticipated.

No direct impacts on any state or federally listed species are anticipated as a result of the project. These species include California red-legged frog and Alameda whipsnake, which are not believed to occur on or frequent the site. Suitable habitat for Alameda whipsnake is absent on the site and surrounding lands and no known occurrences of California red-legged frogs have been recorded in the freshwater marsh/riparian habitat north of the site.

Mitigation Measure Biology – 8.1a: Preconstruction Nesting Bird Surveys. To the extent feasible, construction activities shall occur during the non-nesting season (September 1 to January 31). For any construction activities conducted during the nesting season (February 1 to August 31), a qualified biologist shall conduct a preconstruction nest survey of all trees or other suitable nesting habitat in and within 250 feet of the limits of work. The survey shall be conducted no more than 15 days prior to the start of work. If the survey indicates the presence of nesting birds, the biologist shall determine an appropriately sized buffer around the nest in which no work shall be allowed until the young have successfully fledged. The size of the nest buffer shall be determined by the biologist and shall be based on the nesting species and its sensitivity to disturbance. In general, buffer sizes of up to 250 feet for raptors and 50 feet for other birds should suffice to prevent substantial disturbance to nesting birds, but these buffers may be increased or decreased, as appropriate, depending on the bird species and the level of disturbance anticipated near the nest.

Mitigation Measure Biology – 8.1b: Preconstruction Roosting Bat Surveys. Preconstruction surveys for roosting bats shall be conducted prior to demolition of the existing Camp Sweeney buildings and gymnasium. The surveys shall be conducted by a qualified biologist no more than 15 days prior to demolition. If bat roosts are encountered, demolition shall be postponed until bats have been relocated. Roost entrances shall be fitted with one-way doors that allow exits but prevent entrance for a period of several days to encourage bats to relocate. If maternity roosts are found, the structure with the maternity roost shall be avoided and bat relocation efforts postponed until the offspring have fledged.

Resulting Level of Significance: With implementation of Mitigation Measures 8.1a and 8.1b potential impacts on special-status species would be reduced to less than significant levels.

Loss of Sensitive Natural Communities

NO IMPACT. Sensitive natural community types, such as willow riparian scrub, are located outside the limits of grading and would not be impacted by the proposed Project. Because no impacts on the willow riparian scrub are anticipated, no mitigation is proposed.

IMPACT 8.2: Loss or Modifications to Wetlands

POTENTIALLY SIGNIFICANT AND MITIGABLE IMPACT. The proposed Project would avoid the potentially jurisdictional seasonal wetland, exposed ditch, and constructed drainage ditches. Additionally, the off-site willow riparian/freshwater marsh would not be impacted by the proposed Project.

Although the seasonal wetland situated adjacent to the westerly edge of the visitor's parking lot would not be directly impacted by the parking lot, a minimum 20-foot buffer is recommended. Therefore, the parking lot would be designed so that no part of the parking lot would be closer than 20 feet from the edge of the wetland. A minimum 20-foot setback is recommended because the Alameda County Watercourse Protection Ordinance describes a minimum 20-foot setback from the top of bank of a watercourse. The seasonal wetland is not a watercourse, but should still be protected with a minimum 20-foot setback. The exposed ditch situated between the North Access Road and the proposed visitor's parking lot where the headwall, culvert, and willow are present, would be avoided by a minimum 5-foot buffer.

> **Mitigation Measure Biology – 8.2a: Wetland Setback.** The seasonal wetland adjacent to the visitor's parking lot shall have a minimum 20-foot setback from the parking lot or other proposed structures, roads, or project-related development.
>
> **Mitigation Measure Biology – 8.2b: Exposed Ditch Setback.** The exposed ditch situated between the North Access Road and the proposed visitor's parking lot where the headwall, culvert, and willow are present, shall have a minimum 5-foot buffer setback from the parking lot or other proposed structures, roads, or project-related development.
>
> Because no impacts on these features are anticipated, no on-site or off-site mitigation is proposed.
>
> *Resulting Level of Significance*: With implementation of the Mitigation Measures 8.2a and 8.2b potential impacts on wetlands would be reduced to less than significant levels.

IMPACT 8.3: Loss of Wildlife Habitat

LESS THAN SIGNIFICANT IMPACT. The proposed Project is not likely to interfere substantially with the movement of wildlife, impede use of any wildlife nurseries, or result in a substantial loss of wildlife habitat at the site. The Project site is highly disturbed and mostly supports roads, parking lots, and ruderal, non-native grassland fields that were previously occupied by buildings. The willow riparian scrub north of the site would remain undisturbed, protecting this sensitive wildlife habitat. Proposed development would result in the removal of ornamental trees/landscaping and ruderal grasslands within the limits of grading. However, wildlife species that likely inhabit these areas are relatively common and adapted to urban environments; the loss of habitat would not be considered significant. Species common to suburban habitat would eventually occupy landscape improvements and structures developed as part of the project. No mitigation is required.

IMPACT 8.4: Conflict with Local Policies or Ordinances

POTENTIALLY SIGNIFICANT AND MITIGABLE IMPACT. The Project site is mapped in the *Castro Valley General Plan* as an area with "Moderate Priority Biological Resources" (Figure 7-2 of the Castro Valley General Plan 2012), but the proposed Project would avoid the sensitive biological resources within this mapped area. The proposed Project would be consistent with the *Castro Valley General Plan* requiring that development be restricted to those areas where native plant life and wildlife habitat values are least significant. Consistent with *Castro Valley General Plan*, native woodland communities, and

particularly, riparian areas, would be protected from direct encroachment of development. The willow riparian scrub north of the Project site is located outside the limits of grading.

The proposed Project would not be consistent with the policies in the *Castro Valley General Plan* that require lands containing sensitive biological resources to be preserved and protected. The proposed Project would result in the loss of potential nesting habitat for loggerhead shrikes, white-tailed kites, and other birds, and may result in the loss of habitat for special-status bat species. However, the loss of these potentially significant biological resources would be mitigated through implementation of mitigation measures **Biology – 1a** and **Biology – 1b**.

The proposed Project would be consistent with the Alameda County tree ordinance, and would obtain a permit from the County prior to removing trees within the ROW. These trees would be replaced on the site at a minimum 1:1 ratio.

Out of the 103 trees surveyed, 14 trees would be avoided and protected and the remaining 89 trees would most likely be removed during construction. A large cork oak (*Quercus suber*) tree situated east of the existing parking lot and the large ruderal grassland field (tree number 39, **Figure 8.2)** would be avoided and preserved. This cork oak, a native red willow, and 13 additional surveyed trees would be avoided, but the remaining 89 trees, consisting of mostly non-native trees, would most likely be removed as part of the proposed Project. Five of the 89 removed trees are situated within Alameda County's Fairmont Drive Right of Way (ROW) and therefore would require a permit from the County for their removal. The other 84 removed trees are not protected by the Alameda County tree ordinance or any other local tree ordinance and therefore can be removed without obtaining a permit.

The proposed Project would be consistent with *Policy 7.3-2: Native Environment* of the *Castro Valley General Plan* by preserving existing native trees and plants whenever feasible, such as the avoidance of the native riparian woodland north of the Project site. **Mitigation Measure Biology – 3a** below provides standard tree protection measures that should be implemented in order to protect avoided native trees on or adjacent to the Project site.

> **Mitigation Measure Biology – 8.4a: Standard Tree Protection Measures.** The following standard tree protection measures should be implemented to protect retained trees on or immediately adjacent to the site during project construction:
>
> - **Tree Avoidance.** The proposed Project shall avoid any impacts on as many trees as feasible. The proposed Project shall also incorporate placement of tree protection fencing outside of the drip line of retained trees.
> - **Tree Protection Zone.** All on-site trees to be retained shall be enclosed within a Tree Protection Zone (TPZ) in order to prevent direct damage to the trees and their growing environment. The TPZ (as shown on the figure in the Tree Survey Report) will be constructed from blaze orange barrier fencing supported by metal "T rail" fence posts. The TPZ will be placed at a distance that is at or outside of the drip lines of retained trees to the extent feasible based on the limits of the area to be graded. TPZ fencing will be installed before site preparation, construction activities, or tree removal/trimming begins and will be installed under the supervision of a qualified arborist.
> - **Use of Heavy Equipment.** Heavy machinery will not be allowed to operate or park within or around areas containing retained trees (unless these areas are currently a paved surface). If it is necessary for heavy machinery to operate within the dripline of retained trees, then a layer of mulch or pea gravel at least 4 inches in depth will be placed on the ground beneath the dripline. A ¾-inch sheet of plywood will be placed on

top of the mulch. The plywood and mulch will reduce compaction of the soil within the dripline. The plywood and mulch will be removed once construction is complete.

- **Storage of Construction Materials and Debris.** Construction materials (e.g., gravel, aggregate, heavy equipment) or project debris and waste material will not be placed adjacent to or against the trunks of retained trees. Furthermore, no poison or other substance harmful to trees shall be allowed to lie, leak, pour, flow, or drip upon or into the soil within the dripline of any tree located within the County ROW.
- **Incidental Damage to Protected Trees.** The attachment of wires, nails, tacks, staples, advertising posters or signs, and ropes to any County ROW tree is strictly prohibited. This restriction is not intended to apply to staking or other material used to secure a tree.
- **Trimming.** Although no specific branch or branches are recommended for removal from retained trees, tree trimming may be required to allow the movement of construction machinery.
- Unless exempted by the Public Works Agency Director in writing in the encroachment permit or otherwise, removal of any tree located in the County ROW for which an encroachment permit is required shall be performed by a contractor holding a valid license of the appropriate classification as described by the California Business and Professions Code and such other additional valid license(s) required under federal or State law to do the proposed work. In addition to the requirements established by the Public Works Agency Director, the licensed contractor shall be familiar with International Society of Arboriculture pruning guidelines and shall comply with these guidelines established by their publication, *Best Management Practices, Tree Pruning*[6].
- All branches to be removed will be pruned back to an appropriate sized lateral or to the trunk by following proper pruning guidelines.
- All trimming will be conducted by or under the supervision of a certified arborist.

Mitigation Measure Biology – 8.4b: Replacement of Trees within the Alameda County Right-of-Way or Elsewhere on the Project Site. Five mana gum [*Eucalyptus viminalis*] trees that are protected by the Alameda County tree ordinance may be impacted by the Project. All impacted trees within the County ROW or trees within the Project Site that must be removed to accommodate the Project will be mitigated at a 1:1 replacement ratio by planting the same tree species that was removed at a location to be determined through consultation with the Alameda County Public Works Agency Director.

Resulting Level of Significance: With implementation of the Mitigation Measures 8.4a and 8.4b, potential conflicts with local policies or ordinances would be reduced to less than significant levels.

Conflict with Any Habitat Conservation Plans

NO IMPACT. The proposed Project would not conflict with any adopted Habitat Conservation Plan, Natural Community Conservation Plan, or other approved conservation plan.

[6] Gilman, E. F. and S. J. Lilly. 2002. Best Management Practices, Tree Pruning. A companion publication to the ANSI A300 Part 1: Tree, Shrub, and Other Woody Plant Maintenance – Standard Practices, Pruning. Published by International Society of Arboriculture, Champagne, IL.

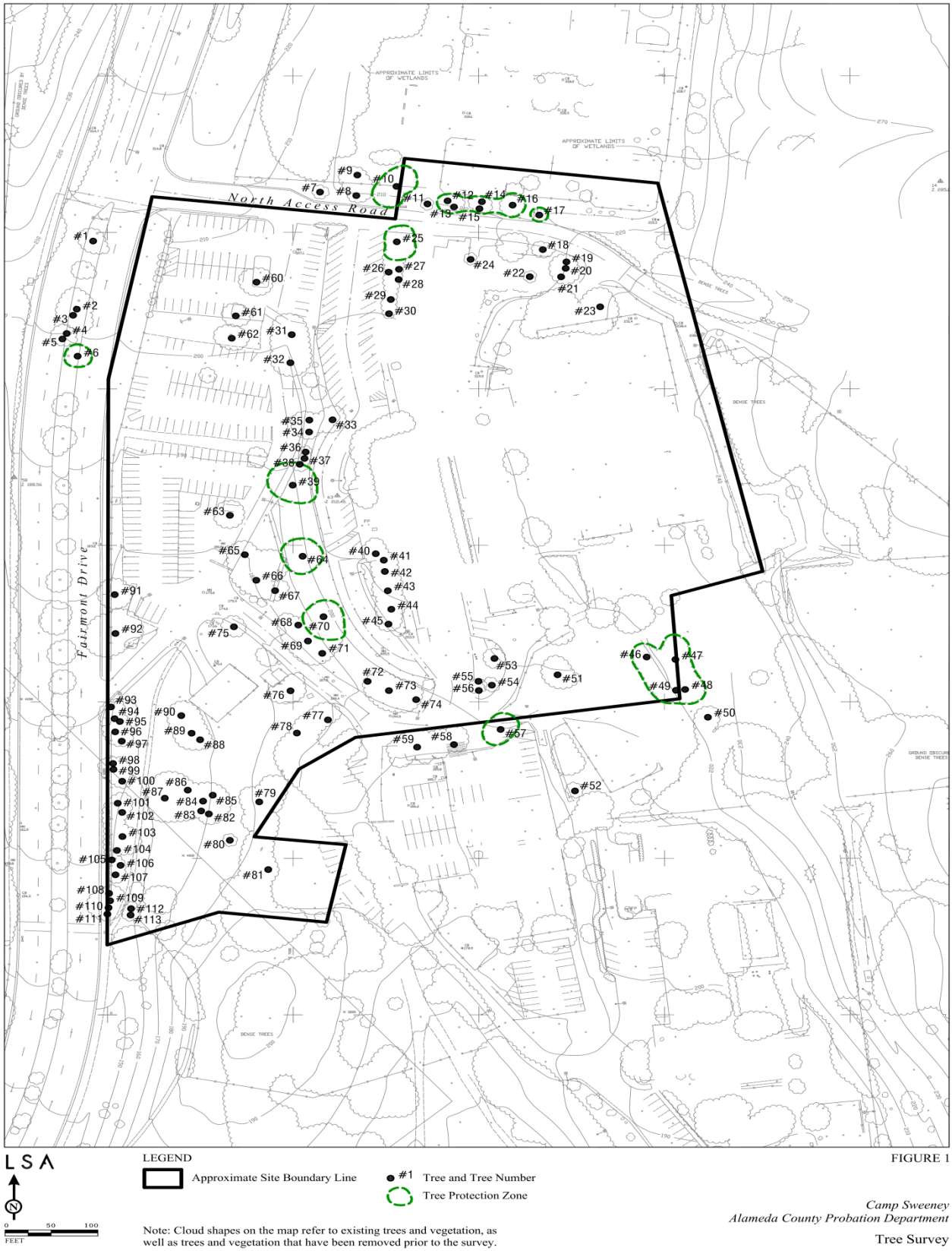

Figure 8.2. Tree Survey

9

TRANSPORTATION

This Chapter of the EIR was prepared by TJKM Transportation Consultants. It evaluates the proposed Project's potential impacts related to traffic and circulation. This section describes the existing transportation network and traffic conditions in the vicinity of the site and evaluates the extent to which the proposed Project may affect traffic levels and transportation system operations.

ENVIRONMENTAL SETTING

This section describes the existing conditions in the project site vicinity, including roadway facilities, bicycle and pedestrian facilities, and available transit service. In addition, existing traffic volumes and operations are presented for study intersections, including the results of level of service (LOS) calculations.

Roadway Network

The Project site is located on Fairmont Drive, just off I-580 at 150th Avenue and Foothill Boulevard, accessed from Fairmont Drive via the North Access Road. Major roadways providing access to the Project site include:

- *I-580* is an eight-lane freeway running in the north-south direction in the Project vicinity. As one of the major freeways in the San Francisco Bay Area, I-580 provides access to Oakland and San Francisco to the north and west, as well as Hayward to the south and Pleasanton and Livermore to the east. Average daily volume west of 150th Avenue is approximately 157,000 vehicles.
- *East 14th Street* (State Route 185) is a major north-south arterial in the City of San Leandro. It is fronted largely by commercial land uses and is the main street in downtown San Leandro. Average daily volume north of Hesperian Boulevard is approximately 21,700 vehicles.
- *Fairmont Drive* is a major east-west arterial in the City of San Leandro. It connects the new Juvenile Justice Center with Castro Valley to the east and I-580 to the west. Fairmont Drive becomes Floresta Boulevard west of Hesperian Boulevard. Average daily volume east of Foothill Boulevard is approximately 8,950 vehicles.
- *Foothill Boulevard* is a north-south arterial that runs parallel to and just east of I-580. Average daily volume north of Fairmont Drive is approximately 12,787 vehicles.
- *Hesperian Boulevard* is a major north-south arterial that starts at East 14th Street and continues south through San Lorenzo and Hayward. It serves as an alternate route to I-880. Average daily volume near 150th Avenue is approximately 24,200 vehicles.
- *150th Avenue* is an east-west arterial in the City of San Leandro. It provides access between Hesperian Boulevard and I-580. Average daily volume west of Freedom Avenue is approximately 16,705 vehicles.

Existing Traffic Conditions

Based on the project location, key roadways providing access to the site, and review of the prior transportation analysis conducted for the *Alameda County Juvenile Justice Facility/East County Hall of Justice Draft Environmental Impact Statement/EIR* (2003), nine study intersections were chosen for the LOS analysis near the proposed Camp Sweeney project site. The study intersections and the type of existing traffic control are listed below and are shown in **Figure 9.1**.

1. I-580 eastbound off-ramp/Freedom Avenue and 150th Avenue (signal)
2. I-580 westbound on-ramp/Foothill Boulevard and 150th Avenue (signal)
3. I-580 eastbound on-ramp /Freedom Avenue and Fairmont Drive (signal)
4. I-580 westbound off-ramp and Foothill Boulevard (off-ramp stop-controlled)
5. Foothill Boulevard and Fairmont Drive (signal)
6. Fairmont Drive and East 14th Street (signal)
7. East 14th Street and 150th Avenue/Louise Street (signal)
8. 150th Avenue and Hesperian Boulevard (signal)
9. Fairmont Drive and North Access Road (side-street stop-controlled)

Figure 9.1. Study Intersections

Existing Traffic Volumes

Peak-hour intersection turning movement counts of vehicles, bicycles, and pedestrians were collected during the a.m. peak period (7:00 a.m – 9:00 a.m.) and p.m. peak period (4:00 p.m. – 6:00 p.m.) on Tuesday, July 14, 2015. Since there are no public schools in the immediate vicinity of the Project site, any differences in peak-hour traffic volumes from other months of the year are anticipated to fall within the typical range of day-to-day fluctuation of traffic volumes, and would not differ in a manner that would affect impact findings for these study intersections. Traffic signal timing sheets for the signalized study intersections were obtained from the respective jurisdictions.[1] **Figure 9.2** illustrates the existing peak hour turning movement's volumes, controls and lane geometry for each of the study intersections.

Existing Level of Service

Traffic operations at each of the study intersections were quantified through the determination of LOS, a qualitative measure describing operational conditions within a traffic stream.[2] There are six LOSs defined for each type of facility (i.e., roadway or intersection) analyzed. LOS has letter designations ranging from A to F, with LOS A representing free flow traffic with little or no delay and LOS F representing jammed conditions with excessive delay and long back-ups. Procedures for analyzing each type of facility are based on the Highway Capacity Manual 2000 as incorporated into the standard traffic engineering software package TRAFFIX.

At signalized and all-way stop-sign controlled intersections, peak hour LOS is based on average vehicle delay for the intersection as a whole. At side-street stop-controlled intersections, peak hour LOS is based on average delay for the worst approach.

Table 9.1 presents a summary of existing peak hour levels of service at the study intersections. Eight of the nine intersections currently operate at acceptable service levels (LOS D or better) during both the morning and afternoon peak hours.[3] The intersection of I-580 westbound off-ramp/Foothill Boulevard currently operates at LOS F during the a.m. peak hour and LOS D during the p.m. peak hour, with the stop-sign controlled off-ramp experiencing an average delay of 51 seconds during the a.m. peak hour.

[1] TJKM Transportation Consultants. Traffic Impact Study. September 2015.

[2] Ibid.

[3] Ibid.

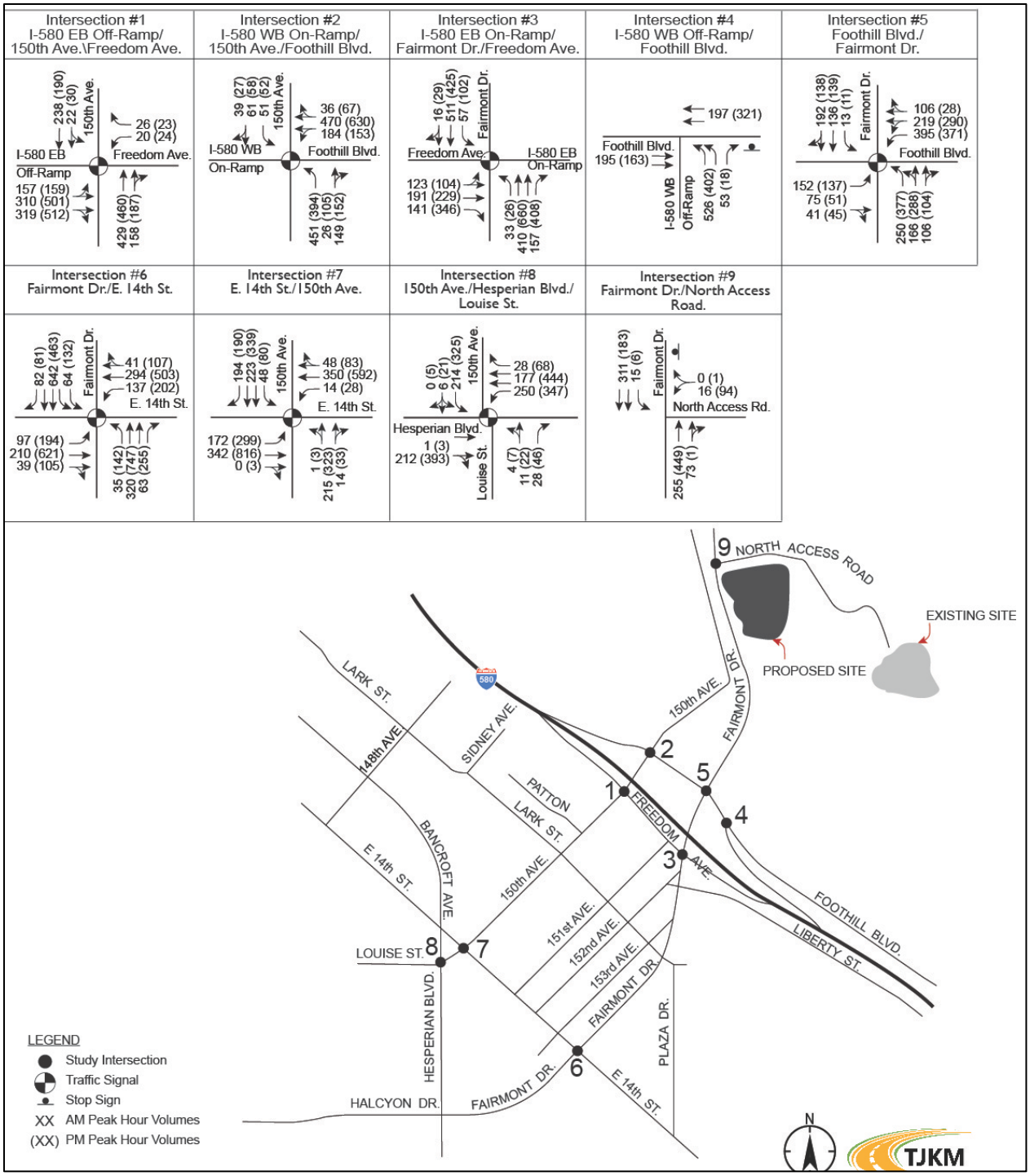

Figure 9.2. Existing Conditions Traffic Volumes, Controls and Lane Geometry

TABLE 9.1: PEAK HOUR INTERSECTION LEVELS OF SERVICE – EXISTING CONDITIONS

ID	Intersection	A.M. Peak Hour		P.M. Peak Hour	
		Delay second/vehicle	LOS	Delay second/vehicle	LOS
1	I-580 eastbound off-ramp/Freedom Avenue and 150th Avenue (signal)	30.2	C	25.5	C
2	I-580 westbound on-ramp/Foothill Boulevard and 150th Avenue (signal)	23.1	C	20.5	C
3	I-580 eastbound on-ramp/Freedom Avenue and Fairmont Drive (signal)	21.7	C	24.9	C
4	I-580 westbound off-ramp and Foothill Boulevard (off-ramp stop-controlled)	**51.3**	**F**	32.2	D
5	Foothill Boulevard and Fairmont Drive (signal)	48.6	D	46.8	D
6	Fairmont Drive and East 14th Street (signal)	23.7	C	32.9	C
7	East 14th Street and 150th Avenue/Louise Street (signal)	21.4	C	24.6	C
8	150th Avenue and Hesperian Boulevard (signal)	15.0	B	17.5	B
9	Fairmont Drive and North Access Road (side-street stop-controlled)	12.4	B	17.5	C

Source: TJKM Transportation Consultants.

Notes: Average intersection delay expressed in seconds per vehicle for signalized intersections and all-way stop controlled intersections. Total control delay for the worst approach is presented for side-street stop controlled intersections.
***Bold** indicates intersections that operate at a deficient LOS.*

Pedestrian Facilities

Sidewalks and crosswalks comprise pedestrian facilities. Pedestrian access to the site is provided from Fairmont Boulevard by the North Access Road. Fairmont Drive near the Project site has sidewalks on both sides. 150th Avenue between Foothill Boulevard and Hesperian Boulevard has sidewalks on both sides. East 14th Street between 150th Avenue and Fairmont Drive has sidewalks on both sides. Crosswalks are located across the legs of the signalized intersections. A continuous sidewalk and pedestrian facility exist between the project site and the transit stops at the intersection of Fairmont Drive and the North Access Road. **Figure 9.3** shows the existing pedestrian facilities in the project vicinity.

Figure 9.3. Existing Pedestrian Facilities

Bicycle Facilities

Bicycle access to the site is provided from Fairmont Drive via the North Access Road. There are existing bike lanes (Class II) on both sides of Fairmont Drive, north of the intersection of Fairmont Drive and Foothill Boulevard near the project vicinity. Class II bike lanes are proposed between Foothill Boulevard and Hesperian Boulevard on Fairmont Drive. Class II bike lanes are proposed east of the intersection of Fairmont Drive and Foothill Boulevard in the vicinity of the Project. There are existing Class II bike lanes on Hesperian Boulevard, between Lewelling Boulevard and west of 159th Avenue, and on 150th Avenue between East 14th Street and Fairmont Drive. East 14th Street is proposed to have unclassified bike lanes between Fairmont Drive and Lewelling Boulevard. **Figure 9.4** shows the existing and proposed bicycle facilities in the project vicinity.

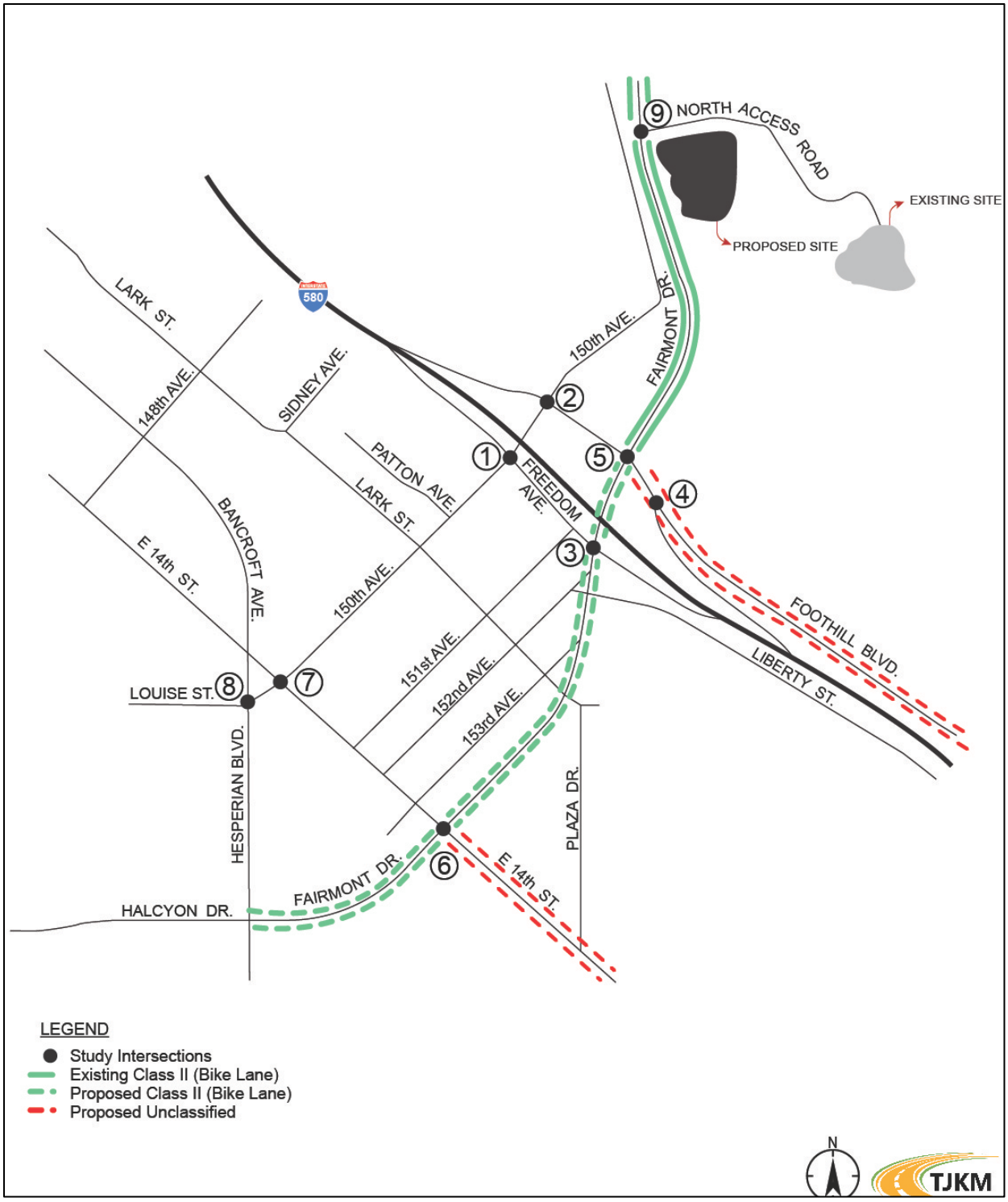

Figure 9.4. Existing and Proposed Bicycle Facilities

Transit Service

The Project site is served by AC Transit Line 89, which stops on Fairmont Boulevard adjacent to the site and provides service to the San Leandro and Bay Fair BART stations. On weekdays, Line 89 runs with a 30-minute headway from 5:15 a.m. to 7:45 p.m. On Saturdays, Line 89 runs with a 60-minute headway between 7:30 a.m. and 6:30 p.m.

REGULATORY SETTING

The Project site is located in an unincorporated area of Alameda County, near but not within the municipal boundaries of the City of San Leandro. As a consequence, the policies of the City of San Leandro are not legally applicable to the Project, but are summarized here for informational purposes to provide the City of San Leandro an assessment of potential impacts in relation to the City's traffic standards and criteria.

City of San Leandro

The San Leandro General Plan contains LOS standards for intersection operations at both signalized intersections and unsignalized intersections. San Leandro General Plan Policy 16.02 in the Transportation Element states that the minimum acceptable level of service is LOS D for streets and intersections, unless otherwise indicated in the Transportation Element. The LOS D may be exceeded only under two circumstances. These circumstances are if road improvements are not possible because the necessary ROW does not exist and cannot be acquired without significant impacts on adjacent buildings and properties or if the intersection or road segment is in a pedestrian district, such as downtown, where the priority is on pedestrian, bicycle, and public transit access rather than vehicle traffic.

For the purposes of this study, significant traffic impacts at intersections in the study area are identified if the Project causes:

- An intersection to operate at LOS E or F; or
- An increase in the volume-to-capacity ratio of 0.05 or more for signalized intersections that operate at LOS E or F under No Project conditions; or
- An increase in average delay of more than 5 seconds on the worst approach for unsignalized intersections that operate at LOS E or F under No Project conditions.

County of Alameda

The general policy for Alameda County is to have their intersections operate no worse than LOS D.

The Alameda Countywide Bicycle Plan (October 2012) provides a list of existing and proposed bicycle facilities in the County of Alameda. It also contains the policy vision, design guidance, and specific recommendations to guide the development of pedestrian and bicycle facilities. Bicycle facilities include the following:

- Bike Paths (Class I) – Paved trails that are separated from roadways that can be used by both pedestrians and bicyclists.

- Bike Lanes (Class II) – Lanes on roadways designated for use by bicycles through striping, pavement legends, and signs.
- Bike Routes (Class III) – Roadways designated for bicycle use by signs or other markings may or may not include additional pavement width for cyclists.
- Unclassified – These are bikeways that are identified in the vision network, but for which the facility type has not yet been determined by the local agency.

Alameda County Congestion Management Agency

The Alameda County Congestion Management Agency requires that local jurisdiction address traffic operating conditions on Metropolitan Transportation System roadways for development projects that would generate more than 100 p.m. peak hour vehicle trips.

California Department of Transportation

The California Department of Transportation's minimum acceptable LOS is between LOS C and LOS D for intersections. For this study, the LOS standard for the intersections was considered to be LOS D.

ENVIRONMENTAL CONSEQUENCES AND MITIGATION MEASURES

Significance Criteria

Based on the CEQA Guidelines, the Project could have a significant environmental impact if it resulted in:

- Conflict with an applicable plan, ordinance or policy establishing measures of effectiveness for the performance of the circulation system, taking into account all modes of transportation including mass transit and non-motorized travel and relevant components of the circulation system, including but not limited to intersections, streets, highways and freeways, pedestrian and bicycle paths, and mass transit. The minimum acceptable level of service for both the City of San Leandro and County of Alameda is LOS D for streets and intersections. For the purposes of this EIR, traffic impacts at study area intersections are considered significant if Project traffic would have the following effects:
    - Cause an intersection to operate at LOS E or F; or
    - Result in an increase in the volume-to-capacity ratio of 0.05 or more for signalized intersections that operate at LOS E or F under No Project conditions; or
    - Result in an increase in average delay of more than 5 seconds on the worst approach for unsignalized intersections that operate at LOS E or F under No Project conditions.
- Conflict with an applicable congestion management program, including, but not limited to level of service standards and travel demand measures, or other standards established by the county congestion management agency for designated roads or highways.
- Result in a change in air traffic patterns, including either an increase in traffic levels or a change in location that results in substantial safety risks.

- Substantial increase in hazards due to a design feature (e.g., sharp curves or dangerous intersections) or incompatible uses (e.g., farm equipment).
- Result in inadequate emergency access.
- Conflict with adopted policies, plans or programs regarding public transit, bicycle, or pedestrian facilities, or otherwise decrease the performance or safety of such facilities.

Impacts and Mitigation Measures

IMPACT 9.1: Increased Traffic on Local Roadways and Intersections

LESS THAN SIGNFICANT IMPACT: The proposed Project is anticipated to result in a net increase of 39 vehicle trips during the a.m. peak hour and 34 vehicle trips during the p.m. peak hour. The side-street stop-controlled intersection of Foothill Boulevard and the I-580 westbound off-ramp currently operates at LOS F during the a.m. peak traffic hour. Average delay to the worst approach would increase by less than five seconds with the addition of trips generated by the proposed Project, and signalization of this intersection would not be warranted. All other study intersections would continue to operate acceptably at LOS D or better with the addition of trips generated by the proposed Project. Therefore, based on the LOS significance criteria, the increased traffic generated by the Project would not conflict with an applicable plan, ordinance, or policy establishing measures of effectiveness for the performance of the circulation system and this impact is less than significant.

Proposed Site Access

Under the proposed Project, the North Access Road would continue to serve as the main point of access for staff, visitors and youth entering or exiting Camp Sweeney, including motor vehicle, pedestrian and bicycle access. **Figure 9.5** shows the locations of both the North Access and South Access Road under the proposed site plan.

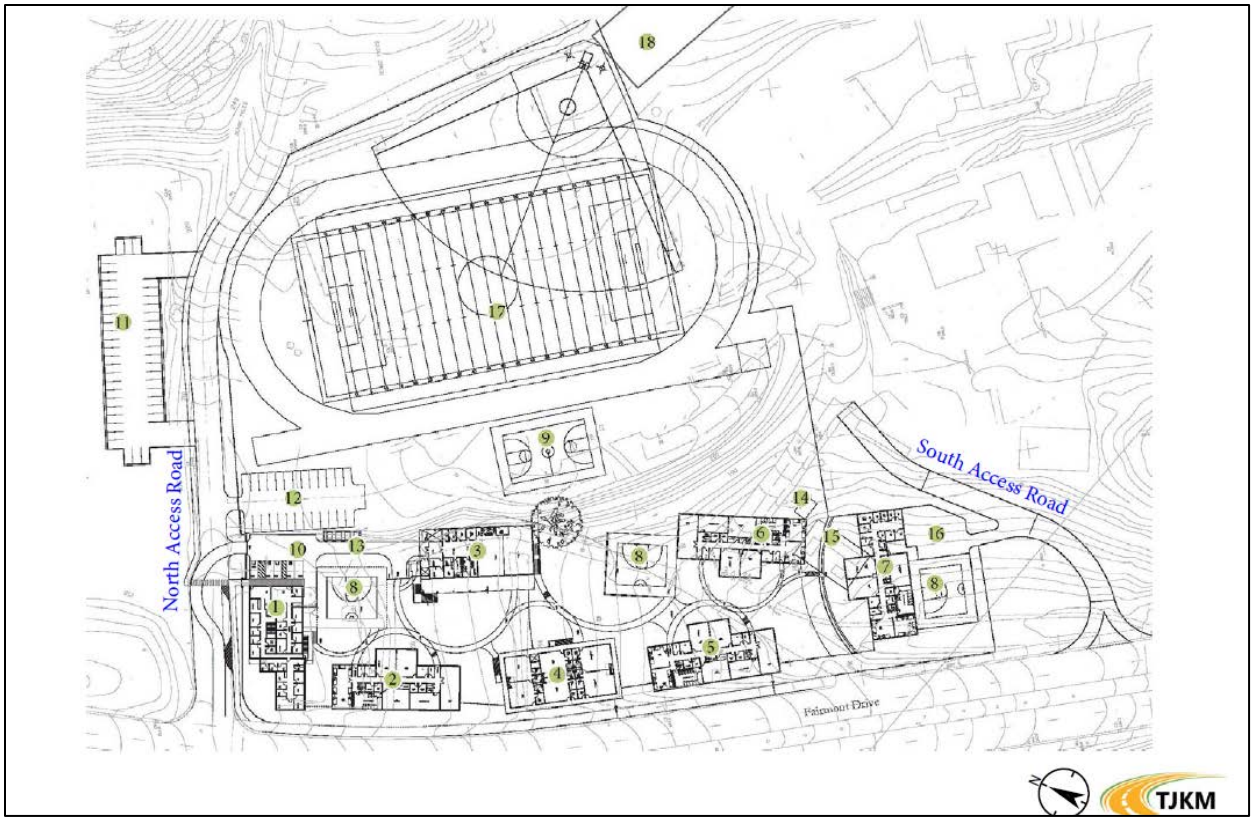

Figure 9.5. Proposed Site Access

Under the proposed Project, the South Access Road would be realigned with a new configuration that would continue to provide access to the Las Vistas facility, Quest Academy, and the Snedigar Cottage/GSA Building Maintenance Department building and would also provide gated access to the Camp Sweeney Boys' Residence (building 7) in order to provide a direct method to bring youth to the secure rooms without accessing the rest of the site. Since the proposed Project would eliminate direct access to the North Access Road for those facilities accessed via the South Access Road, the South Access driveway would be reconfigured to accommodate both inbound and outbound trips via right-turn movements to and from Fairmont Drive. Provision of a northbound U-turn pocket on Fairmont Drive approaching the North Access Road (**Figure 9.6**) is also proposed, in order to accommodate the resulting increase in U-turn movements that would result from vehicles exiting the South Access Road.

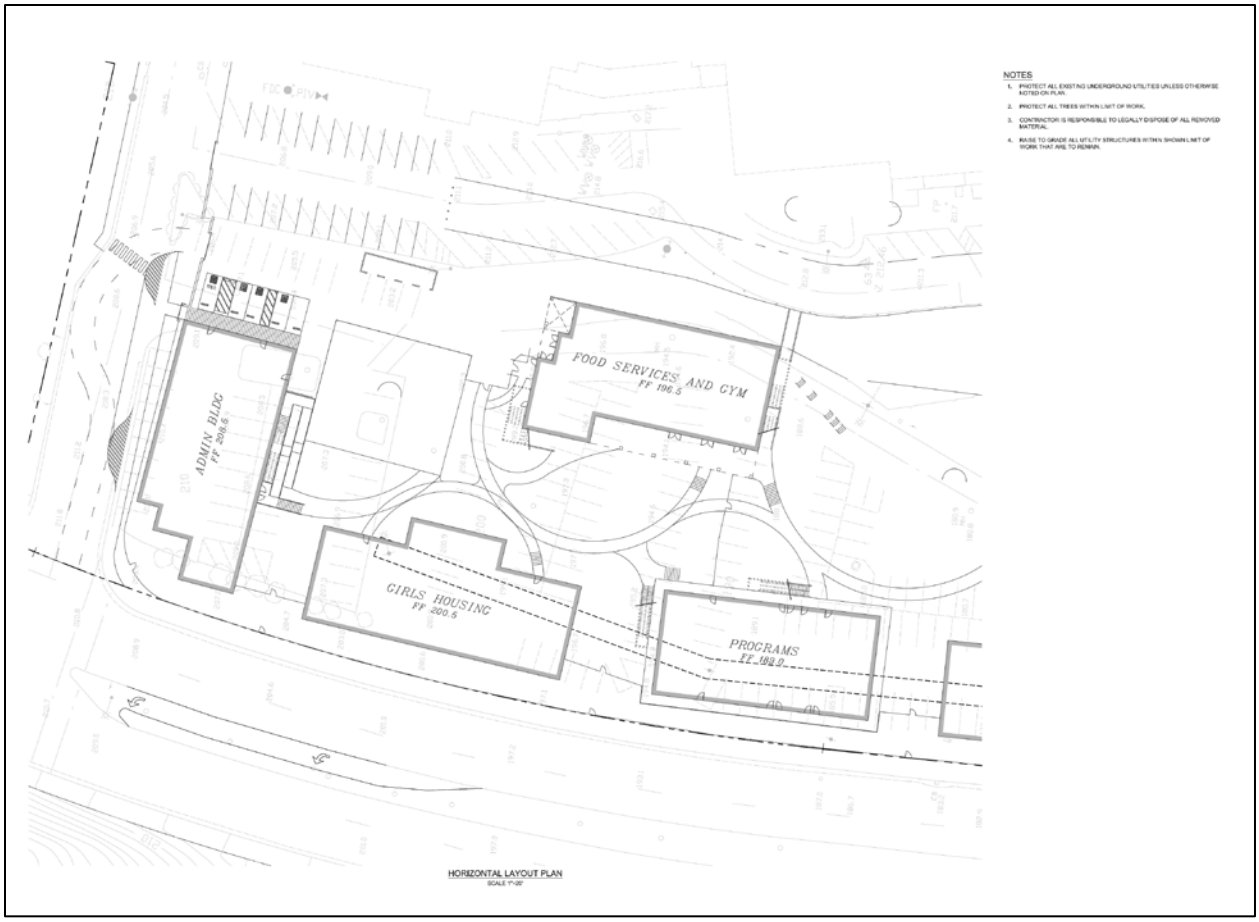

Figure 9.6. Proposed Fairmont Drive U-Turn Lane

Trip Generation, Distribution and Assignment

Trip generation refers to the anticipated increase in peak hour vehicle trips that would result from the proposed Project on a typical weekday, based on the net additional vehicle trips that would be generated by the proposed Camp Sweeney Replacement Project, excluding vehicle trips generated by the existing Camp Sweeney facility. In order to estimate the existing rate of trip generation, driveway counts were conducted during both the morning peak period (7:00 a.m. – 9:00 a.m.) and evening peak period (4:00 p.m. – 6:00 p.m.) at the entrance to the existing Camp Sweeney site, located at the terminus of the North Access Road. Local traffic associated with the Juvenile Justice Center was excluded from the driveway counts.

Based on the driveway counts, the existing numbers of inbound and outbound vehicle trips during the peak hours were converted to “per bed” units in order to have a common unit of measurement when estimating future trips from the proposed larger capacity Camp Sweeney facilities. The driveway counts indicate the existing 50-bed facility generates 14 vehicle trips during the a.m. peak hour and 12 vehicle trips during the p.m. peak hour. The existing 50-bed facility therefore generates 0.28 vehicle trips per bed during the a.m. peak hour and 0.24 vehicle trips per bed during the p.m. peak hour.

The forecast of Project trip generation is based on the anticipated net increase in vehicle trips that would result from the additional 70 beds that would be provided by the proposed Project. In an effort to analyze the worst-case scenario, the existing per-bed rate of vehicle trip generation was doubled for

purposes of forecasting net trip generation. Based on the doubled rates for both the a.m. and p.m. peak hours, the provision of 70 additional beds under the proposed Project would result in a net increase of 39 vehicle trips during the a.m. peak hour, and 34 vehicle trips during the p.m. peak hour. **Table 9.2** provides a summary of the trip generation forecast.

TABLE 9.2: VEHICLE TRIP GENERATION FORECAST

Scenario	Size		A.M. Peak Hour (between 7 a.m. and 9 a.m.)						P.M. Peak Hour (between 4 p.m. and 6 p.m.)					
			Rate	In %	Out %	In	Out	Total	Rate	In %	Out %	In	Out	Total
Existing Trips	50	Beds	0.28	78	22	11	3	14	0.24	33	67	4	8	12
Project Trips	**70**	**Beds**	**0.56**	**78**	**22**	**30**	**9**	**39**	**0.48**	**33**	**67**	**11**	**23**	**34**
Existing plus Project Trips	120	Beds				41	12	53				15	31	46

Notes: 1. Existing peak hour vehicle trip rates were determined based on driveway counts conducted by TJKM on 08/12/2015 at the existing 50-bed Camp Sweeney facility.

2. Project trips represent the net additional peak hour vehicle trips that would be generated by the proposed 120-bed Camp Sweeney facility. The forecast of Project trips was determined by applying the per-bed rate to the additional 70 beds that would be provided under the proposed Project. To provide a conservative worst-case analysis, the existing per-bed rate was doubled for purposes of forecasting Project trips.

3. Existing plus Project trips represent the total vehicle trips that would be generated by the proposed 120-bed Camp Sweeney Replacement, including both Existing and Project trips, based on this methodology.

Project trip distribution refers to the anticipated path of travel for vehicle trips to and from the Project site. Trip distribution assumptions were developed based on review of existing turning movements, area travel patterns, and general knowledge of the area.[4] The trip distribution assumptions are as follows:

- 45 percent will travel on I-580 to and from the west
- 30 percent will travel on I-580 to and from the east
- 10 percent will travel on Fairmont Drive to and from north of the intersection of Fairmont Drive and the North Access Road
- 5 percent will travel on Fairmont Drive to and from south of the intersection of Fairmont Drive and East 14th Street
- 5 percent will travel on Fairmont Drive to and from east of the intersection of Fairmont Drive and East 14th Street
- 3 percent will travel on East 14th Street to and from west of the intersection of 150th Avenue and East 14th Street
- 2 percent will travel on Hesperian Boulevard via 150th Avenue

[4] The assumptions are derived from existing volumes as presented in Figure 9.2. For example, based on the turning movements at Fairmont/North Access Road, 91 percent of peak-direction trips (AM inbound/PM outbound) were to/from the south on Fairmont; this number was rounded off to 90 percent.

Peak-hour vehicle trips that would be generated by the proposed Project were assigned to the study intersections using these trip distribution assumptions to produce forecasts of Existing Plus Project traffic volumes at each of the study intersections. **Figure 9.7** illustrates the anticipated Trip Distribution and Trip Assignment for peak hour vehicle trips that would be generated by the proposed Project. **Figure 9.8** illustrates that forecasted Existing Plus project peak hour turning movement volumes for the proposed project, based on the addition of Project trips at each study intersection.[5]

Level of Service Analysis – Existing plus Project Conditions

As shown in **Table 9.3**, under Existing Plus Project Conditions, all the study intersections continue to operate at the same LOS as under Existing Conditions. The side-street stop-sign controlled intersection of I-580 westbound off-ramp and Foothill Boulevard will continue to operate at LOS F during the a.m. peak hour, and average delay to the worst approach will increase by less than 5 seconds with the addition of project trips. A peak-hour signal warrant analysis was conducted that indicates a signal will not be warranted under Existing Plus Project conditions. Therefore, based on the LOS Threshold criteria for both unsignalized and signalized intersections, the impact of peak-hour vehicle trips generated by the proposed Project would be **less than significant** at each of the study intersections.[6]

The Project will not significantly impact operations on the Interstate 580 (I-580) freeway, given the relatively low volume and anticipated distribution of Project trips:

- North of Fairmont Drive: the Project will generate 4 peak-direction trips on I-580 during the a.m. peak hour (northbound trips from Camp Sweeney, entering I-580 at Fairmont Drive and traveling towards Oakland), and 5 peak-direction trips on I-580 during the p.m. peak hour (southbound trips from Oakland to Camp Sweeney, exiting I-580 at Fairmont Drive).
- South of Fairmont Drive: the Project will generate 9 peak-direction trips on I-580 during the a.m. peak hour (northbound trips traveling to Camp Sweeney and exiting I-580 at Fairmont Drive), and just 10 peak-direction trips during the p.m. peak hour (southbound trips from Camp Sweeney, entering I-580 at Fairmont Drive).

[5] TJKM Transportation Consultants. Traffic Impact Study. September 2015.

[6] Ibid.

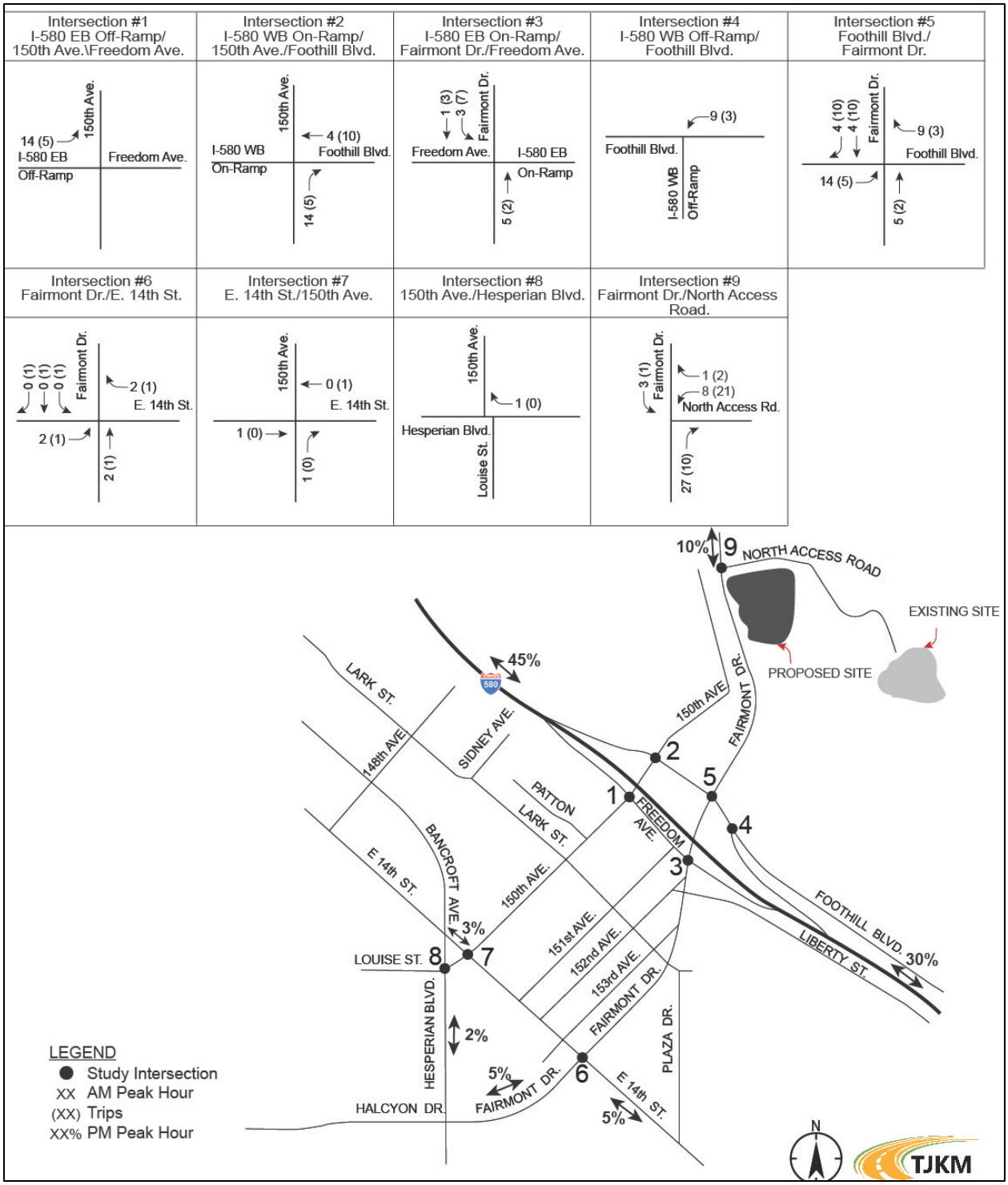

Figure 9.7. Project Trip Distribution and Trip Assignment

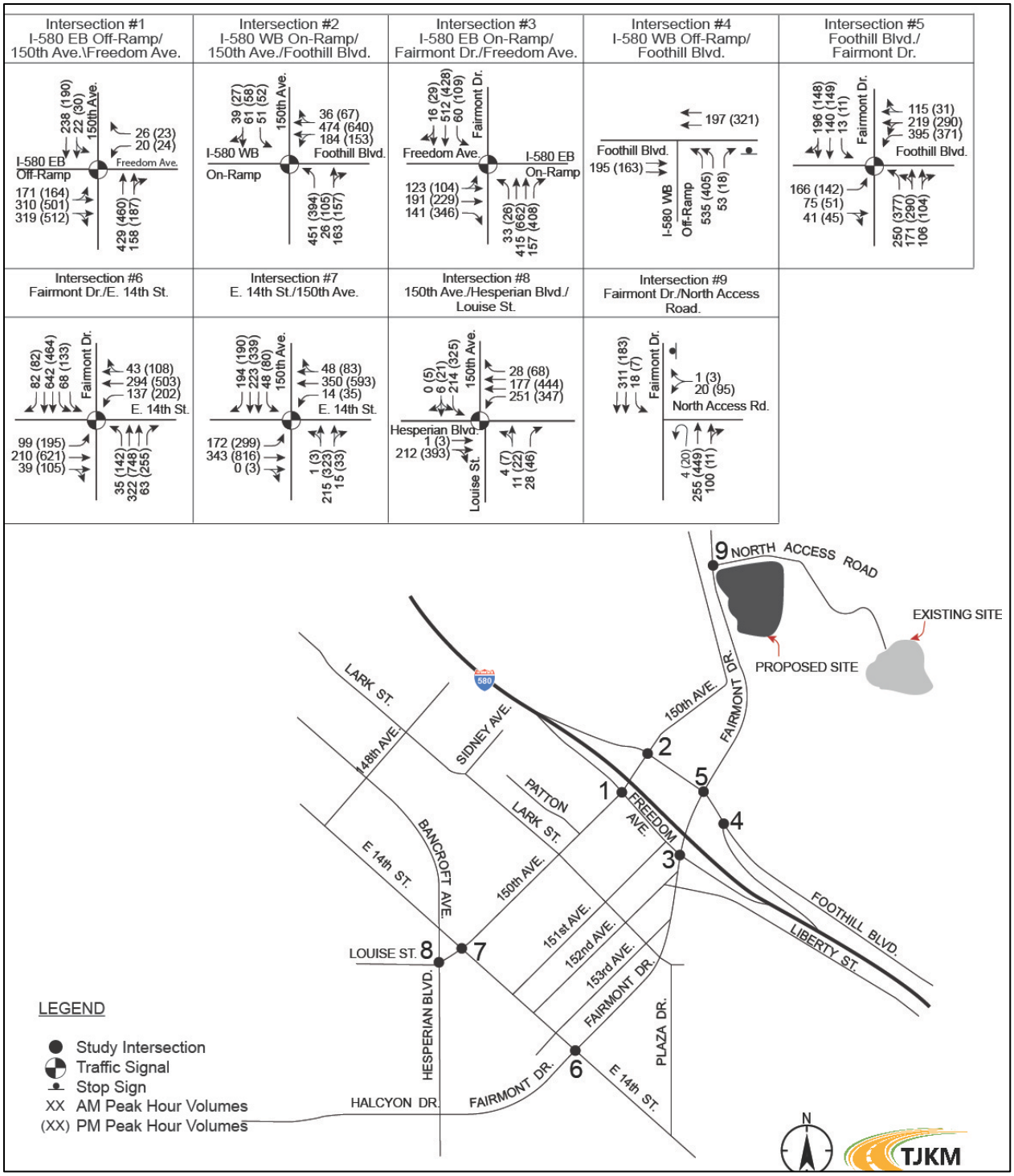

Figure 9.8. Existing plus Project Conditions Turning Movement Volumes, Controls and Lane Geometry

TABLE 9.3: PEAK HOUR INTERSECTION LEVEL OF SERVICE FOR EXISTING PLUS PROJECT CONDITIONS

ID	Intersection	Peak Hour	Existing Conditions		Existing plus Project Conditions	
			Average Delay	LOS	Average Delay	LOS
1	I-580 eastbound off-ramp/Freedom Avenue and 150th Avenue (signal)	AM	30.2	C	30.3	C
		PM	25.5	C	25.6	C
2	I-580 westbound on-ramp/Foothill Boulevard and 150th Avenue (signal)	AM	23.1	C	23.1	C
		PM	20.5	C	20.6	C
3	I-580 eastbound on-ramp/Freedom Avenue and Fairmont Drive (signal)	AM	21.7	C	21.7	C
		PM	24.9	C	25.1	C
4	I-580 westbound off-ramp and Foothill Boulevard (off-ramp stop-controlled)	AM	**51.3**	**F**	**55.0**	**F**
		PM	32.2	D	32.8	D
5	Foothill Boulevard and Fairmont Drive (signal)	AM	48.6	D	49.1	D
		PM	46.8	D	47.4	D
6	Fairmont Drive and East 14th Street (signal)	AM	23.7	C	23.7	C
		PM	32.9	C	33.0	C
7	East 14th Street and 150th Avenue/Louise Street (signal)	AM	21.4	C	21.4	C
		PM	24.6	C	24.6	C
8	150th Avenue and Hesperian Boulevard (signal)	AM	15.0	B	15.0	B
		PM	17.5	B	17.5	B
9	Fairmont Drive and North Access Road (side-street stop-controlled)	AM	12.4	B	13.9	C
		PM	17.5	B	19.2	C

Source: TJKM Transportation Consultants.

Notes: 1. Average intersection delay expressed in seconds per vehicle for signalized intersections and all way stop controlled intersections. Total control delay for the worst approach is presented for side-street stop controlled intersections.

*2. **Bold** indicates intersections that operate at a deficient Level of Service.*

IMPACT 9.2: Conflict with an applicable congestion management program, including, but not limited to level of service standards and travel demand measures, or other standards established by the county congestion management agency for designated roads or highways.

LESS THAN SIGNIFICANT IMPACT. The Alameda County Congestion Management Agency requires that local jurisdiction address traffic operating conditions on Metropolitan Transportation System roadways for development projects that would generate more than 100 p.m. peak-hour vehicle trips. The proposed Project is expected to generate only 34 net additional trips during the p.m. peak hour. Therefore the proposed Project would not conflict with the applicable congestion management program.

Result in a change in air traffic patterns, including either an increase in traffic levels or a change in location that results in substantial safety risks.

NO IMPACT. The proposed project would not result in any change in air travel patterns.

IMPACT 9.3: A Substantial Increase in Hazards Due to a Design Feature or Incompatible Uses

LESS THAN SIGNIFICANT IMPACT. Inclusion of a northbound U-turn pocket at the intersection of Fairmont Drive and the North Access Road was evaluated from both the operational as well as safety perspective. The evaluation showed that inclusion of a U-turn pocket would not result in an adverse impact operationally and would not impose a safety hazard. Based on the evaluation, the U-turn pocket should provide at least a 100 feet storage length and 100 feet taper for the proposed U-turn lane and a "YIELD TO PEDESTRIANS" sign to remind drivers that pedestrians have the ROW on the crosswalk.

Existing Circulation Pattern

Under existing conditions, vehicles that enter the facilities such as Las Vistas Facility, Quest School, and Snedigar Cottage/GSA Building Maintenance Department building within the Fairmont Campus are provided inbound access from Fairmont Drive via the South Access Road (see **Figure 9.5**). While exiting under existing conditions, those vehicles exit via the North Access Road with a left-turn on to westbound Fairmont Drive to access the I-580 freeway by traversing through the open parking lots where the proposed Camp Sweeney would be built.

Proposed Circulation Pattern

Based on the proposed Project site plan (see **Figure 9.5**), the South Access Road is proposed to serve the Boys' Residence (building 7) at the new Camp Sweeney facility and is proposed to be realigned to provide a restricted right-in right-out access. Therefore, the vehicles exiting from other facilities located on the Fairmont Campus—such as Las Vistas, Quest School, and Snedigar Cottage—would no longer be able to exit via the North Access Road and would be restricted to right-out only when exiting directly on to Fairmont Drive from the realigned South Access Road. Since most of those exiting vehicles from the South Access Road are headed toward the freeway, those vehicles would need to make a northbound U-turn at the intersection of Fairmont Drive and the North Access Road. Vehicles are permitted to make a U-turn at this location under existing conditions, but there is no stacked northbound U-turn lane at that intersection currently. Therefore, the Project sponsor is proposing to include a northbound U-turn to facilitate the safety of the predominant turning movements of vehicles exiting from the South Access

Road. **Figure 9.6** above provides a conceptual illustration of the potential northbound U-turn lane configuration on Fairmont Drive approaching the North Access Road.

The following section summarizes the results of an assessment of the proposed northbound U-turn lane at the intersection of Fairmont Drive and the North Access Road from both the operational as well as the safety perspective.

Operational Evaluation Assumptions

1. Based on the existing peak hour turning movement volumes at the intersection of Fairmont Drive and the North Access Road, the estimated volume of U-turns will be less than 20 vehicles during the p.m. peak hour. The potential U-turn volume was estimated based on the difference between the existing westbound left turning vehicles during the p.m. peak hour and the northbound right turning vehicles during the a.m. peak hour, which showed a net difference of 21 vehicles. Since the net difference also includes some vehicles that entered via the Juvenile Justice Center upper driveway during the a.m. peak hour, the total volume of potential U-turn movements is estimated to be less than 20 vehicles. Nonetheless, in an effort to analyze the worst-case scenario, the U-turn analysis was conducted based on hypothetical U-turn volume of 139 vehicles.
2. For the purpose of this evaluation, Synchro 8.0 and Highway Capacity Manual 2010 methodology were used.

Safety Evaluation

1. An auto-turn analysis was conducted to examine whether the turning radii was sufficient for the vehicles that would make a U-turn. The results indicated a passenger car of length less than 20 feet would have sufficient radii to make the U-turn. However, vehicles greater than 20 feet in length would have tighter radii to make the movement. In addition, it is not possible for the trucks (greater than 30-foot length) to make the movement.
2. The existing crosswalk on Fairmont Drive at this location provides access for pedestrians to enter the facility from the nearby bus stops. A heavy pedestrian volume on the crosswalk during the p.m. peak hour would potentially conflict with the U-turning movements since the intersection is unsignalized. However, based on the existing counts, just three pedestrian crossings occurred at this location during the p.m. peak hour.

Evaluation Results

The results showed that provision of a northbound U-turn lane at the intersection of Fairmont Drive and the North Access Road is not anticipated to result in significant operational or safety impacts.[7]

Recommendations

- Provide at least a 100-foot storage lane with a 100-foot taper for the proposed U-turn lane.
- Install "YIELD TO PEDESTRIANS" sign to remind drivers that pedestrians have the ROW on the crosswalk.

[7] Ibid.

IMPACT 9.4: Result in inadequate Emergency Access

LESS THAN SIGNIFICANT IMPACT. The proposed Project would maintain full access to the site for emergency vehicles via the North Access Road, and the South Access Road reconfiguration would accommodate both inbound and outbound access for emergency vehicles. In addition, the proposed Project would reduce emergency response time to Camp Sweeney, since the Camp Sweeney Replacement Project will be located directly adjacent to Fairmont Drive. The proposed Project is not anticipated to result in inadequate emergency access.

IMPACT 9.5: Conflict with adopted policies, plans or programs regarding public transit, bicycle, or pedestrian facilities, or otherwise decrease the performance or safety of such facilities.

LESS THAN SIGNIFICANT IMPACT. AC Transit service is provided by AC Transit Line 89, which stops on Fairmont Boulevard adjacent to the site and provides service to the San Leandro and Bay Fair BART stations. On weekdays, Line 89 runs with a 30-minute headway from 5:15 a.m. to 7:45 p.m. On Saturdays, Line 89 runs with a 60-minute headway between 7:30 a.m. and 6:30 p.m. BART service is located within one mile of the site at the Bay Fair station, located at 15242 Hesperian Boulevard, San Leandro and is connected by AC Transit buses. The proposed Project does not conflict with adopted policies, plans, or programs regarding transit facilities. The proposed Project is expected to contribute minimal additional riders to the AC Transit system, which currently provide ample capacity, and is not anticipated to decrease the performance of existing or planned transit facilities.

Sidewalks are provided on both sides of Fairmont Drive near the site. 150th Avenue between Foothill Boulevard and Hesperian Boulevard has sidewalks on both sides. East 14th Street between 150th Avenue and Fairmont Drive has sidewalks on both sides. Crosswalks are located across the legs of the signalized intersections. A continuous sidewalk and pedestrian facility exist between the project site and the transit stops at the intersection of Fairmont Drive and the North Access Road. **Figure 9.3** shows the existing pedestrian facilities in the project vicinity. Overall, most of the existing infrastructure appropriately accommodates pedestrian demand. The proposed Project does not conflict with adopted policies, plans or programs regarding pedestrian facilities. The proposed project is not expected to generate a significant increase in pedestrian trips, and is not anticipated to decrease the performance of existing or planned pedestrian facilities.

Existing bike lanes (Class II) are provided on both sides of Fairmont Drive, between the Project site and Foothill Boulevard. The *Alameda Countywide Bicycle Plan* (October 2012) provides a list of existing and proposed bicycle facilities in the County of Alameda. It also contains the policy vision, design guidance, and specific recommendations to guide the development of pedestrian and bicycle facilities. The proposed Project does not conflict with the Countywide Bicycle Plan. The proposed Project is not expected to generate a significant increase in bicycle trips, and is not anticipated to decrease the performance of existing or planned bicycle facilities.

10

NOISE

ENVIRONMENTAL SETTING

This Chapter and the related analyses were prepared by Illingworth & Rodkin, Inc.

Fundamental Concepts of Environmental Acoustics

Noise may be defined as unwanted sound. Noise is usually objectionable because it is disturbing or annoying. The objectionable nature of sound could be caused by its pitch or its loudness. Pitch is the height or depth of a tone or sound, depending on the relative rapidity (frequency) of the vibrations by which it is produced. Higher pitched signals sound louder to humans than sounds with a lower pitch. Loudness is intensity of sound waves combined with the reception characteristics of the ear. Intensity may be compared with the height of an ocean wave in that it is a measure of the amplitude of the sound wave.

In addition to the concepts of pitch and loudness, there are several noise measurement scales which are used to describe noise in a particular location. A decibel (dB) is a unit of measurement which indicates the relative amplitude of a sound. The zero on the dB scale is based on the lowest sound level that the healthy, unimpaired human ear can detect. Sound levels in dBs are calculated on a logarithmic basis. An increase of 10 dBs represents a 10-fold increase in acoustic energy, while 20 dBs is 100 times more intense, 30 dBs is 1,000 times more intense, etc. There is a relationship between the subjective noisiness or loudness of a sound and its intensity. Each 10 dB increase in sound level is perceived as approximately a doubling of loudness over a fairly wide range of intensities. Technical terms are defined in **Table 10.1**.

TABLE 10.1: DEFINITIONS OF ACOUSTICAL TERMS

Term	Definitions
Decibel	A unit describing, the amplitude of sound, equal to 20 times the logarithm to the base 10 of the ratio of the pressure of the sound measured to the reference pressure. The reference pressure for air is 20 micro Pascals.
Sound Pressure Level	Sound pressure is the sound force per unit area, usually expressed in micro Pascals (or 20 micro Newtons per square meter), where 1 Pascal is the pressure resulting from a force of 1 Newton exerted over an area of 1 square meter. The sound pressure level is expressed in decibels as 20 times the logarithm to the base 10 of the ratio between the pressures exerted by the sound to a reference sound pressure (e.g., 20 micro Pascals). Sound pressure level is the quantity that is directly measured by a sound level meter.
Frequency	The number of complete pressure fluctuations per second above and below atmospheric pressure. Normal human hearing is between 20 Hertz (Hz) and 20,000 Hz. Infrasonic sound are below 20 Hz and Ultrasonic sounds are above 20,000 Hz.

A-Weighted Sound Level	The sound pressure level in decibels as measured on a sound level meter using the A-weighting filter network. The A-weighting filter de-emphasizes the very low and very high frequency components of the sound in a manner similar to the frequency response of the human ear and correlates well with subjective reactions to noise.
Equivalent Noise Level	The average A-weighted noise level during the measurement period.
L_{max}, L_{min}	The maximum and minimum A-weighted noise level during the measurement period.
Day/Night Noise Level	The average A-weighted noise level during a 24-hour day, obtained after addition of 10 dBs to levels measured in the night between 10:00 p.m. and 7:00 a.m.
Community Noise Equivalent Level	The average A-weighted noise level during a 24-hour day, obtained after addition of 5 decibels in the evening from 7:00 p.m. to 10:00 p.m. and after addition of 10 decibels to sound levels measured in the night between 10:00 p.m. and 7:00 a.m.
Ambient Noise Level	The composite of noise from all sources near and far. The normal or existing level of environmental noise at a given location.

Source: Handbook of Acoustical Measurements and Noise Control, Harris, 1998.

There are several methods of characterizing sound. The most common in California is the A-weighted sound level (dBA). This scale gives greater weight to the frequencies of sound to which the human ear is most sensitive. Representative outdoor and indoor noise levels in units of dBA are shown in **Table 10.2**. Because sound levels can vary markedly over a short period of time, a method for describing either the average character of the sound or the statistical behavior of the variations must be used. Most commonly, environmental sounds are described in terms of an average level that has the same acoustical energy as the summation of all the time-varying events. This energy-equivalent sound/noise descriptor is called L_{eq}. The most common averaging period is hourly, but L_{eq} can describe any series of noise events of arbitrary duration.

TABLE 10.2: TYPICAL SOUND LEVELS MEASURED IN THE ENVIRONMENT AND INDUSTRY

Common Outdoor Activities	Noise Level (dBA)	Common Indoor Activities
	110 dBA	Rock band
Jet fly-over at 1,000 feet		
	100 dBA	
Gas lawn mower at 3 feet		
	90 dBA	
Diesel truck at 50 feet at 50 mph		Food blender at 3 feet
	80 dBA	Garbage disposal at 3 feet
Noisy urban area, daytime		
Gas lawn mower, 100 feet	70 dBA	Vacuum cleaner at 10 feet
Commercial area		Normal speech at 3 feet
Heavy traffic at 300 feet	60 dBA	
		Large business office
Quiet urban daytime	50 dBA	Dishwasher in next room
Quiet urban nighttime	40 dBA	Theater, large conference room

Quiet suburban nighttime		
	30 dBA	Library
Quiet rural nighttime		Bedroom at night, concert hall (background)
	20 dBA	
		Broadcast/recording studio
	10 dBA	
	0 dBA	

Source: Technical Noise Supplement, California Department of Transportation, September 2013.

The scientific instrument used to measure noise is the sound level meter. Sound level meters can accurately measure environmental noise levels to within about plus or minus 1 dBA. Various computer models are used to predict environmental noise levels from sources, such as roadways and airports. The accuracy of the predicted models depends upon the distance the receptor is from the noise source. Close to the noise source, the models are accurate to within about plus or minus 1 to 2 dBA.

Since the sensitivity to noise increases during the evening and at night—because excessive noise interferes with the ability to sleep—24-hour descriptors have been developed that incorporate artificial noise penalties added to quiet-time noise events. The Community Noise Equivalent Level (CNEL) is a measure of the cumulative noise exposure in a community, with a 5 dB penalty added to evening (7:00 p.m. – 10:00 p.m.) and a 10 dB addition to nocturnal (10:00 p.m. – 7:00 a.m.) noise levels. The day/night average sound level (L_{dn}) is essentially the same as CNEL, with the exception that the evening time period is dropped and all occurrences during this three-hour period are grouped into the daytime period.

Local Physical Setting

Existing Site

The Project site is located east of Fairmont Drive in an unincorporated part of Alameda County, east of the San Leandro city limits. The existing Camp Sweeney is located east of the Project site. Residential land uses bound the site to the west, the County Juvenile Justice Center to the north, and hospital land uses to the south. The existing noise environment at the site results primarily from traffic on Fairmont Drive. Intermittent noise from aircraft over flights also contributes to the noise environment.

A noise monitoring survey was conducted between July 10, 2015 and July 14, 2015, to document existing noise conditions at the Project site. The noise monitoring survey included one long-term noise measurement (LT-1) and two short-term measurements (ST-1 and ST-2). Noise measurements locations are shown in **Figure 10.1**.

Figure 10.1. Noise Measurement Locations

Long-term noise measurement LT-1 was located at the adjacent residential land uses along Van Avenue, west of the proposed Project site approximately 85 feet from the center of Fairmont Drive and about 12 feet above the ground.[1] Noise levels measured at this site were primarily the result of traffic on Fairmont Drive and Van Avenue. Hourly average noise levels typically ranged from 61 to 64 dBA L_{eq} during the day and 48 to 62 dBA L_{eq} at night. The calculated L_{dn} at this location ranged from 63 to 64 dBA L_{dn}.

Two attended short-term noise measurements were made to complete the July 2015 noise monitoring survey. Short-term noise measurement ST-1 was approximately 80 feet from the center of Fairmont Drive. The 10-minute average noise level during the mid-day was 64 dBA L_{eq}. Short-term measurement ST-2 was located approximately 135 feet from the center of Fairmont Drive. The average noise level at this location was 59 dBA L_{eq}. **Table 10.3** summarizes the results of these measurements.

TABLE 10.3 SUMMARY OF SHORT-TERM NOISE MEASUREMENT DATA

Noise Measurement Location	L_{max}	$L_{(1)}$[1]	$L_{(10)}$[2]	$L_{(50)}$[3]	$L_{(90)}$[4]	L_{eq}	L_{dn}
ST-1: approximately 80 feet from the center of Fairmont Drive. (7/10/2015, 11:40 a.m.–11:50 a.m.)	77	74	68	59	52	64	63
ST-2: approximately 135 feet from the center of Fairmont Drive. (7/10/2015, 11:50 a.m.–12:00 p.m.)	68	67	63	57	51	59	60

[1] The DBAs that are exceeded 1 percent of the time during the measurement period
[2] The DBAs that are exceeded 10 percent of the time during the measurement period
[3] The DBAs that are exceeded 50 percent of the time during the measurement period

[1] Illingworth & Rodkin 2015.

[4] The DBAs that are exceeded 90 percent of the time during the measurement period

Note: L_{dn} at the short-term site approximated by correlating the noise data to noise data collected at the long-term site during a corresponding time period.

REGULATORY SETTING

The State of California and County of Alameda have established plans and policies designed to limit noise exposure at noise sensitive land uses. These plans and policies are contained in the following documents: (1) CEQA Guidelines, Appendix G, (2) Title 24, Part 2, California Building Code, and (3) Title 24, Part 1, Division VII Board of Corrections Regulations pertaining to minimum standards for juvenile facilities.

State CEQA Guidelines

CEQA contains guidelines to evaluate the significance of effects of environmental noise attributable to a proposed project. CEQA asks the following applicable questions. Would the project result in:

(a) Exposure of persons to or generation of noise levels in excess of standards established in the local General Plan or Noise Ordinance, or applicable standards of other agencies?

(b) Exposure of persons to or generation of excessive groundborne vibration or groundborne noise levels?

(c) A substantial permanent increase in ambient noise levels in the project vicinity above levels existing without the project?

(d) A substantial temporary or periodic increase in ambient noise levels in the project vicinity above levels existing without the project?

(e) For a project located within an airport land use plan or, where such a plan has not been adopted within two miles of a public airport or public use airport, exposure of people residing or working in the project area to excessive noise levels?

(f) For a project within the vicinity of a private airstrip, exposure of people residing or working in the project area to excessive noise levels?

Of these guidelines, items (a), (c), and (d) are applicable to the proposed project. Guidelines (b), (e), and (f) are not applicable because the project is located at a distance where groundborne vibration would not be perceptible and is not located in the vicinity of any public use airport or private airstrips.

2013 California Building Code, Title 24, Part 2

The current (2013) California Building Code (CBC) does not place limits on interior noise levels attributable to exterior environmental noise sources, which have been contained in all prior versions of the CBC dating back to 1974. The California Department of Housing and Community Development has proposed reinstating these regulations to building code in an Initial Statement of Reasons document dated March 26, 2014. Because these previous standards are considered good acoustical practice and are likely to be reinstated, this report considers the exterior sound transmission control standards for new hotels, motels, dormitories, apartment houses, and dwellings other than detached single-family dwellings as set forth in the 2010 CBC (Chapter 12, Section 1207.11) to be in place for this analysis. Chapter 12, Section 1207.11 of the 2010 CBC limits interior noise levels attributable to exterior environmental noise sources shall not exceed 45 dBA L_{dn} in any habitable room. When exterior noise

levels (the higher of existing or future) where residential structures are to be located exceed 60 dBA L_{dn}, a report must be submitted with the building plans describing the noise control measures that have been incorporated into the design of the project to meet the noise limit.

California Code of Regulations

The design of juvenile detention facilities is regulated in Title 15 and Title 24 of the California Code of Regulations. Title 24, part 1, Division VII, section 13-201 sets forth the following minimum design standards for acoustics. This regulation would be applicable to noise generated by interior project noise sources such as mechanical equipment.

> Dayroom areas shall be designed and constructed so that the noise level does not exceed 65 dBs and a reverberation time less than 1.5 seconds. Sleeping areas shall have a noise level no higher than 35 dBs and a reverberation time less than 1.5 seconds. The heating, ventilating, and air conditioning noise level shall be no higher than 35 dBs in sleeping areas and classrooms.

Local jurisdictions adopt land use compatibility tables, policies, and ordinances consistent with the State guidelines. The County of Alameda and City of San Leandro each have adopted plans, codes, and ordinances that provide guidance for this Project, but would not apply because the County is exempt from local regulation in the implementation of the Project.

ENVIRONMENTAL CONSEQUENCES AND MITIGATION MEASURES

This section evaluates the adverse noise effects related to the proposed Project. Both the effects of existing ambient noise on the developability of the site for its proposed use, and potential effects of noise from construction and operation at the site upon existing sensitive receivers are evaluated.

Significance Criteria

Appendix G of the CEQA Guidelines states that a project would normally be considered to result in significant noise impacts if noise levels generated by the project conflict with adopted environmental standards or plans, if the project would generate excessive ground-borne vibration levels, or if ambient noise levels at sensitive receptors would be substantially increased over a permanent, temporary, or periodic basis. The following criteria were used to evaluate the significance of environmental noise and vibration resulting from the project:

- A significant noise impact would be identified if the project would expose persons to or generate noise levels that would exceed levels considered normally acceptable for the intended use. The project is not subject to local plans, codes, or ordinances. For multi-family residential noise and land use compatibility, an exterior compatibility standard of 65 dBA L_{dn} is used as a measure of acceptability (and happens to be consistent with Alameda County standards). Interior noise levels must be maintained at or below 45 dBA L_{dn} in accordance with the CBC.
- A significant impact would be identified if operational noise or traffic generated by the project would substantially increase noise levels at existing sensitive receptors. A substantial increase would occur if: (a) the L_{dn} at noise sensitive receptors were to increase by 5 dBA L_{dn} or greater, with a future noise level of less than 60 dBA L_{dn}; or (b) the noise level increase is 3 dBA L_{dn} or greater, with a future noise level of 60 dBA L_{dn} or greater.

- A significant impact would be identified if mechanical equipment generated by the project would generate noise levels exceeding 50 dBA L_{eq} at the property line of adjacent residential uses.
- A significant noise impact would be identified if construction-related noise would temporarily increase ambient noise levels at sensitive receptors. Hourly average noise levels exceeding 60 dBA L_{eq}, and the ambient by a least 5 dBA L_{eq}, for a period of more than 1 year would constitute a significant temporary noise increase at adjacent residential land uses.

Impacts and Mitigation Measures

IMPACT 10.1: Noise and Land Use Compatibility

POTENTIALLY SIGNIFICANT AND MITIGABLE IMPACT. Residential uses developed at the Project site would be exposed to exterior noise levels less than 65 dBA L_{dn}, which complies with normally acceptable exterior noise levels for intended use. However, interior noise levels would not be expected to be 45 dBA L_{dn} or lower without the incorporation of noise insulation features into the project's design.

The project will consist of three males' and one females' residential buildings, administrative building, a food services and gym building, a programs building two basketball courts, and a multi-use athletic field; total gross square feet of buildings is approximately 72,800.

Future Exterior Noise Environment

The future noise environment at the Project site will result primarily from vehicular traffic along Fairmont Drive. Future transportation-related noise levels at the Project site were calculated based on adjustments made to existing noise level data assuming future increased traffic volumes along area roadways. Noise levels throughout the Project site would comply with the County of Alameda's noise and land use compatibility goal of 65 dBA L_{dn}, but would vary depending upon the proximity of receptors to area roadways and the presence of shielding features (e.g., proposed buildings).

Based on a review of traffic data supplied for the Project, traffic noise levels along Fairmont Drive are calculated to remain the same as existing conditions, 64 dBA L_{dn} at the proposed setback of residential facades nearest the roadway.

A review of the site plan indicates that several ground level basketball courts and a multi-use field are proposed on the interior of the site. The courts and multi-use field would be shielded from traffic noise by the surrounding buildings. Exterior noise levels are calculated to be 55 dBA L_{dn} at the basketball courts and multi-use field, closest to Fairmont Drive, when accounting for the shielding provided by the proposed buildings. Due to the increased distance from transportation noise sources and shielding provided by the buildings, exterior noise levels at the outdoor activity areas would meet the exterior noise level limit of 65 dBA L_{dn}.

Future Interior Noise Environment

Interior noise levels within the residential units are required by the State of California to be maintained at or below 45 dBA L_{dn}. Portions of the residential buildings would be exposed to future noise levels greater than 60 dBA Ldn with the highest future noise exposures occurring at unshielded residential façades nearest Fairmont Drive. Future noise levels at these unshielded façades are calculated to reach 64 dBA L_{dn}.

Interior noise levels will vary depending on the design of the building (relative window area to wall area) and construction materials and methods. Standard construction provides approximately 15 dBA of exterior to interior noise reduction assuming the windows are partially open for ventilation. Standard construction with the windows closed provides approximately 20 to 25 dBA of noise reduction to interior spaces. In exterior noise environments ranging from 60 dBA L_{dn} to 65 dBA L_{dn}, interior noise levels can typically be maintained below County standards with the incorporation of an adequate forced air mechanical ventilation system allowing the windows to be closed.

Interior spaces within buildings adjacent to Fairmont Drive will require some form of forced-air mechanical ventilation to achieve this interior noise goal. The remaining facades on the site would achieve interior noise levels of 45 dBA L_{dn} assuming standard California construction methods only.

> **Mitigation Measure Noise – 10.1: Assure Acceptable Interior Noise Levels.** The following mitigation shall be included in the Project's design to maintain interior noise levels at or below 45 dBA L_{dn}:
>
> Residential units within 200 feet of the center of Fairmont Drive shall be provided with forced-air mechanical ventilation, so that windows can be kept closed at the occupant's discretion to control noise.
>
> *Resulting Level of Significance:* The implementation of **Mitigation Measure Noise – 10.1** would reduce the impact to a less than significant level.

IMPACT 10.2: Vehicular Traffic Noise Increase

LESS THAN SIGNIFICANT IMPACT. Traffic data provided by TJKM, Inc. was reviewed to calculate potential Project-related traffic noise level increases along roadways serving the project site. These data included peak-hour turning movement volumes at nine intersections for existing conditions and existing plus Project conditions. Roadway link volumes under existing plus Project conditions were calculated based on the turning movement data and compared to existing conditions in order to calculate the anticipated noise level increase anticipated with the development of the Project. Based on this comparison, traffic noise levels along roadways serving the Project site are anticipated to increase by less than 1 dBA L_{dn} as a result of the project on all studied roadways. The Project would not result in a measureable increase in noise at sensitive receivers in the vicinity of the project site and the impact is less than significant.

IMPACT 10.3: Operational Noise Increases

POTENTIALLY SIGNIFICANT AND MITIGABLE IMPACT. A significant impact would occur if Project operational noise would substantially increase noise levels at nearby residential receivers. A substantial increase would occur if: (a) Project operations cause the L_{dn} at noise sensitive receptors to increase by 5 dBA L_{dn} or greater, with a future noise level of less than 60 dBA L_{dn},; or (b) the noise level increase due to the Project is 3 dBA L_{dn} or greater, with a future noise level of 60 dBA L_{dn} or greater. The predominant operational noise sources associated with the proposed Project would include parking lot activities, rooftop mechanical equipment, and athletic field noise.

Mechanical Equipment

The proposed Project would include mechanical equipment, such as heating, ventilation, and air conditioning systems, exhaust fans, emergency generators, etc. Due to the number of variables inherent in the mechanical equipment needs of the Project (number and types of units, locations, size, housing or enclosures, etc.), the impact of mechanical equipment noise on nearby noise sensitive uses would be assessed during final state of Project design once details on the proposed equipment are available.

Design planning should take into account the noise criteria associated with such equipment and use site planning to locate equipment in less noise sensitive areas where feasible. The most substantial noise generating equipment would most likely be emergency generators or rooftop air conditioning and ventilation systems. Given the proximity of noise-sensitive uses to the site, there is a potential for noise from mechanical equipment or emergency generators to exceed 50 dBA L_{eq} at adjacent residential uses. Mechanical equipment located at the worst case location of the Project site, at the western Project boundary, would need to generate a noise level of less than 67 dBA L_{eq} at 25 feet from the equipment in order to be less than 50 dBA L_{eq} at adjacent residences. This is a potentially significant impact.

Parking Lot

Noise resulting from the use of the Camp Sweeney parking lots would be attributed to sources such as vehicular circulation, engine noise, car alarms, door slams, and human voices. The nearest residences to the west of the site are located approximately 400 feet from the nearest portion of the proposed parking lot. The maximum sound (L_{max}) of a passing car at 15 miles per hour typically ranges from 50 to 60 dBA L_{max} at distance of 50 feet. The noise generated during an engine start is similar. Door slams create lower noise levels. The hourly equivalent noise level resulting from all of these noise-generating activities in a busy parking lot typically ranges from 45 to 55 dBA L_{eq} at a distance of 50 feet from the parking area. The resulting noise levels would fall below ambient traffic noise levels resulting from traffic on Fairmont Drive and would not substantially increase noise levels at adjacent sensitive receivers. This is a less than significant impact.

Athletic Fields

The outdoor athletic fields proposed for the Project include several basketball courts and one multi-use athletic field. Typical activities occurring on the multi-use field would likely include soccer, track, baseball, and football. Most activities occurring at these fields would occur during the day, between the hours of approximately 8:00 a.m. and 4:00 p.m. The athletic fields and courts would not be lighted, so evening or nighttime use is not anticipated. Athletic field noise would be expected to generate noise levels of approximately 63 dBA L_{eq} at a distance of 50 feet from the noise source assuming free-field conditions. Noise levels at the closest residences would be about 14 dBA lower due to the distance between the source of the noise and the receptors, located 400 feet to the west. Shielding provided by the proposed buildings would provide an additional 5 to 10 dBA of attenuation to these receptors. As a result, noise levels at these residences during athletic field activities are calculated to range from approximately 39 to 44 dBA L_{eq}. The calculated noise levels generated by athletic activities at these receptors would not exceed existing ambient noise levels or substantially increase noise levels at these adjacent sensitive receivers (increase during hours containing field activity noise would be less than 1 dBA L_{eq}). This is a less than significant impact.

> **Mitigation Measure Noise – 10.3: Performance Criteria for Mechanical Equipment.** The following mitigation measure shall be included in the Project to reduce the impact to a less than significant level:
>
> Mechanical equipment shall be designed so that noise levels shall not exceed 50 dBA Leq at the property lines of the Project site adjoining noise-sensitive land uses.
>
> *Resulting Level of Significance:* The implementation of **Mitigation Measure Noise – 10.3** would reduce the impact to a less than significant level.

IMPACT 10.4: Construction Noise

LESS THAN SIGNIFICANT IMPACT. Noise impacts resulting from construction depend upon the noise generated by various pieces of construction equipment, the timing and duration of noise-generating activities, and the distance between construction noise sources and noise-sensitive areas. Construction noise impacts primarily result when construction activities occur during noise-sensitive times of the day (e.g., early morning, evening, or nighttime hours), the construction occurs in areas immediately adjoining noise-sensitive land uses, or when construction lasts over extended periods of time. Where noise from construction activities exceeds 60 dBA L_{eq} and exceeds the ambient noise environment by at least 5 dBA L_{eq} at noise-sensitive uses in the Project vicinity for a period exceeding one year, the impact would be considered significant.

Construction activities generate considerable amounts of noise, especially during earth-moving activities when heavy equipment is used. The highest maximum noise levels generated by Project construction would typically range from about 80 to 90 dBA L_{max} at a distance of 50 feet from the noise source. Typical hourly average construction-generated noise levels are about 81 to 88 dBA L_{eq} measured at a distance of 50 feet from the center of the site during busy construction periods (e.g., earth moving equipment, impact tools). Hourly average construction noise levels associated with the erection of the residential buildings, such as hammer and drilling related noise, range from approximately 63 to 71 dBA at a distance of 50 feet. The noise levels associated with construction of the residential units would be substantially less than noise levels associated with grading and pavement activities during Project site preparation. Construction-generated noise levels drop off at a rate of about 6 dBA per doubling of the distance between the source and receptor. Shielding by buildings or terrain often result in lower construction noise levels at distant receptors. Noise levels at the nearest noise sensitive receptors, located 450 feet from the center of the site, are calculated to range from 62 to 69 dBA L_{eq}, with maximum noise levels in the range of 61 to 72 dBA L_{max}.

Construction activities would include site preparation, grading, building construction, paving, and architectural coating. Pile driving is not anticipated as a method of construction. Once construction moves indoors, minimal noise would be generated at off-site locations. The proposed Project is expected to take a total of 30 months to complete, with 6 to 8 of those months being grading and site preparation. Noise generated by construction activities would temporarily elevate noise levels at adjacent noise-sensitive receptors, but this would be considered a less than significant impact, assuming that construction activities are conducted in accordance with the implementation of construction BMPs.

The following standard controls are assumed to be included in the Project:

- Construction activities shall be limited to the hours between 7:00 a.m. and 7:00 p.m. on weekdays, and between 8:00 a.m. and 5:00 p.m. on Saturday or Sunday.
- Equip all internal combustion engine-driven equipment with intake and exhaust mufflers that are in good condition and appropriate for the equipment.
- Unnecessary idling of internal combustion engines should be strictly prohibited.
- Locate stationary noise-generating equipment such as air compressors or portable power generators as far as possible from sensitive receptors. Construct temporary noise barriers to screen stationary noise-generating equipment when located near adjoining sensitive land uses. Temporary noise barriers could reduce construction noise levels by 5 dBA.
- Utilize "quiet" air compressors and other stationary noise sources where technology exists.
- Control noise from construction workers' radios to a point where they are not audible at existing residences bordering the project site.

- The contractor shall prepare a detailed construction plan identifying the schedule for major noise-generating construction activities. The construction plan shall identify a procedure for coordination with adjacent residential land uses so that construction activities can be scheduled to minimize noise disturbance.
- Designate a "disturbance coordinator" who would be responsible for responding to any complaints about construction noise. The disturbance coordinator will determine the cause of the noise complaint (e.g., bad muffler) and will require that reasonable measures be implemented to correct the problem. Conspicuously post a telephone number for the disturbance coordinator at the construction site and include in it the notice sent to neighbors regarding the construction schedule.

Implementation of the above measures would reduce construction noise levels emanating from the site, limit construction hours, and minimize disruption and annoyance. With the implementation of these measures, and recognizing that noise generated by construction activities would occur over a temporary period, the temporary increase in ambient noise levels would be less than significant.

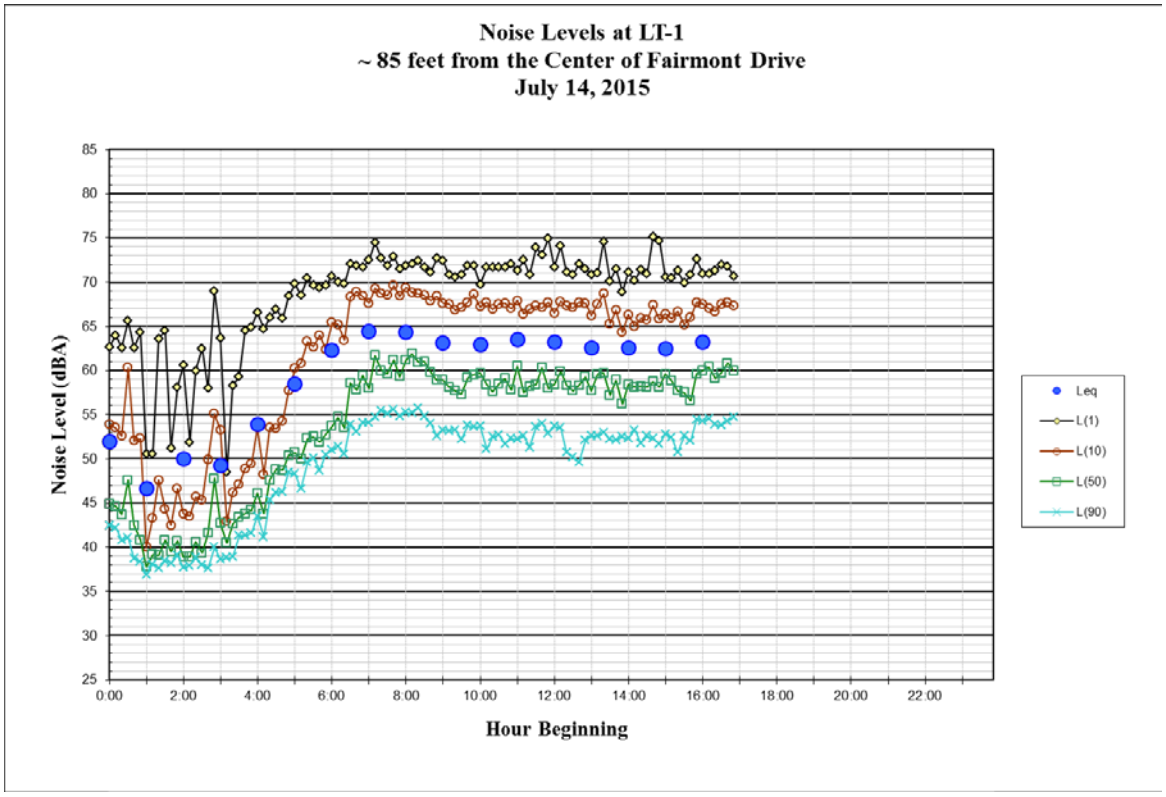

Figure 10.2. Noise Levels Recorded at Location LT-1 (Hillcrest Knolls)

11

AIR QUALITY AND GREENHOUSE GAS EMISSIONS

ENVIRONMENTAL SETTING

This EIR section describes potential local and regional air quality and greenhouse gas (GHG) emissions impacts resulting from the Project. This section has been prepared using methodologies and assumptions recommended by the Bay Area Air Quality Management District (BAAQMD) CEQA Handbook. This section describes existing air quality and construction-period and operational impacts.

Climate Conditions

The Project site is located in the hills above San Francisco Bay. The area along the Bay is primarily flat, and climate is usually controlled by marine air coming across the Bay from the Pacific Ocean. During the day, especially on summer afternoons, the prevailing wind flows from the north or northwest. In winter, wind speeds are lower, and wind may flow in from the northerly or easterly directions when weather is fair, but storms often bring southerly winds. Wind speeds in the area are generally moderate, with an annual average speed of about 5 miles per hour, although summer afternoon wind speed can average 12 miles per hour or more (at Oakland International Airport, Moffett Field Naval Air Station). Highest wind speeds occur during afternoons in late spring and summer. Average maximum summer temperatures are in the 70s with minimums of about 55. Maximum winter temperatures averages are in the low 60s, while the minimum temperatures are in the low 40s. Average rainfall at Oakland is 18 inches, with most of that falling in winter months.

Existing Air Quality Conditions

Criteria Pollutants

Ambient air quality standards have been established by federal and state environmental agencies for specific air pollutants most pervasive in urban environments. These pollutants are referred to as criteria air pollutants because the standards established for them were developed to meet specific health and welfare criteria set forth in the enabling legislation.

- Ozone. Ground-level ozone is the principal component of smog. Ozone is not directly emitted into the atmosphere, but is formed by the photochemical reaction of ozone precursors. These compounds are generally of two classes: reactive organic gases (ROG) and nitrogen oxides (NO_x). Ozone levels are highest during late spring through late summer when precursor emissions are high and meteorological conditions are favorable for the necessary complex photochemical reactions to occur. Motor vehicles are the predominant source of reactive ozone precursor emissions in the San Francisco Bay region.

- Carbon monoxide (CO). CO is a nonreactive pollutant that is highly toxic, invisible and odorless. It is formed by the incomplete combustion of fuels. The largest source of CO emissions is motor vehicles. Wood stoves and fireplaces also contribute to high levels of CO. Unlike ozone, CO is directly emitted to the atmosphere. The highest CO concentrations occur during the nighttime and early mornings in late fall and winter. Ambient CO levels are strongly influenced by meteorological factors such as wind speed and atmospheric stability.
- Nitrogen dioxide (NO_2). NO_2 is a reddish-brown gas that is a by-product of combustion processes. Automobiles and industrial operations are the primary sources of NO_2. In addition to being a regulated criteria pollutant alone, NO_2 contributes to ozone smog formation.
- Sulfur dioxide (SO_2). SO_2 is a colorless gas with a strong odor and potential to damage materials. SO_2 is produced by the combustion of sulfur-containing fuels such as oil and coal. Refineries, chemical plants and diesel exhaust are the primary sources of SO_2 emissions in the region. The proposed Project would not be a substantial source of SO_2 so this pollutant is not mentioned again in this chapter.
- Inhalable particulates. Inhalable particulate is composed of two classes of compounds: PM_{10} and $PM_{2.5}$. PM_{10} refers to particulate matter 10 microns or less in diameter; likewise, $PM_{2.5}$ refers to particulate matter 2.5 microns or less in diameter. Sources of inhalable particulates include smoke, dust, aerosols and metallic oxides. Some inhalable particulates are considered toxic. Although particulates are found naturally in the air (such as sea salt), most particulate matter found in the region are emitted either directly or indirectly by motor vehicles, industry, construction, agricultural activities and wind erosion of disturbed areas.
- Lead. Lead occurs in the atmosphere as particulate matter. It is primarily emitted by gasoline-powered motor vehicles burning fuel containing tetra ethyl lead, which has been virtually eliminated. As a result of lead being eliminated from fuels, levels in the Bay Area have dropped dramatically. Lead concentrations in the Bay Area are well below the ambient standards and are not forecasted to increase. The proposed Project would not be a substantial source of lead so this pollutant is not mentioned again in this chapter.

Table 11.1 shows a summary of federal and state ambient air standards. The table also describes major emission sources for each compound and its potential negative effects.

TABLE 11.1: AMBIENT AIR QUALITY STANDARDS FOR CRITERIA POLLUTANTS PARTS PER MILLION (PPM) OR MICROGRAMS PER CUBIC METER (μG/M^3)

Pollutant	Averaging Time	California Standard	Federal Primary Standard	Pollutant Health and Atmospheric Effects	Major Pollutant Sources
Ozone	1 hour	**0.09 ppm**	–	Irritation and possibly permanent lung damage.	Motor vehicles, including refining and gasoline delivery.
	8 hours	**0.07 ppm**	**0.075 ppm**		
CO	1 hour	20 ppm	35 ppm	Deprives body of oxygen in the blood. Causes headaches and worsens respiratory problems.	Primarily gasoline-powered internal combustion engines.
	8 hours	9.0 ppm	9.0 ppm		
NO_2	Annual Average	0.03 ppm	0.053 ppm	Irritating to eyes and respiratory tract. Colors atmosphere reddish-brown.	Motor vehicles, petroleum-refining, power plants, aircraft, ships, and railroads.
	1 hour	0.18 ppm	0.10 ppm		
SO_2	Annual Average	---	0.03 ppm	Irritates and may permanently injure respiratory tract and lungs. Can damage plants, destructive to marble, iron, and steel. Limits visibility and reduces sunlight.	Fuel combustion, chemical plants, sulfur recovery plants, and metal processing.
	1 hour	0.25 ppm	0.075 ppm		
	24 hours	0.04 ppm	0.14 ppm		
PM_{10}	Annual Mean	**20 μg/m^3**	–	May irritate eyes and respiratory tract, decreases in lung capacity, cancer and increased mortality. Produces haze and limits visibility.	Industrial and agricultural operations, combustion, atmospheric photochemical reactions, and natural activities (e.g., wind-raised dust and ocean sprays).
	24 hours	**50 μg/m^3**	*150 μg/m^3*		
$PM_{2.5}$	Annual Mean	**12 μg/m^3**	*12 μg/m^3*	Same as PM_{10}.	Same as PM_{10}.
	24 hours	–	**35 μg/m^3**		
Lead	Monthly	1.5 μg/m^3	–	Disturbs gastrointestinal system, and causes anemia, kidney disease, and neuromuscular and neurologic dysfunction (in severe cases).	Present source: lead smelters, battery manufacturing & recycling facilities. Past source: combustion of leaded gasoline.
	Quarterly	–	1.5 μg/m^3		

Source: BAAQMD, Air Quality Standards and Attainment Status, May 28, 2015.

Notes: ppm = parts per million

μg/m^3 = micrograms per cubic meter

Bold entries indicate nonattainment status. *Italicized* entries indicate unclassified attainment status. Normal text indicates attainment status.

Air quality in the region is controlled by the rate of pollutant emissions and meteorological conditions. Meteorological conditions such as wind speed, atmospheric stability, and mixing height may all affect the atmosphere's ability to mix and disperse pollutants. Long-term variations in air quality typically result from changes in air pollutant emissions, while frequent, short-term variations result from changes in atmospheric conditions. The San Francisco Bay Area is considered to be one of the cleanest metropolitan areas in the country with respect to air quality. BAAQMD monitors air quality conditions at more than 30 locations throughout the Bay Area. The closest monitoring station to the Project is located in Oakland. **Table 11.2** summarizes exceedances of the state and federal standards at the Oakland monitoring site and Bay Area-wide.

TABLE 11.2: SUMMARY OF CRITERIA AIR POLLUTION MONITORING DATA

Pollutant	Standard	Monitoring Site	Days Standard Exceeded		
			2012	2013	2014
Ozone	State 1-Hour	Oakland	0	0	0
		SF Bay Area Air	3	3	3
Ozone	Federal 8-Hour	Oakland	0	0	0
		SF Bay Area Air	4	3	5
Ozone	State 8-Hour	Oakland	0	0	0
		SF Bay Area Air	8	3	10
PM_{10}	Federal 24-Hour	Oakland	–	–	–
		SF Bay Area Air	0	0	0
PM_{10}	State 24-Hour	Oakland	–	–	–
		SF Bay Area Air	2	6	2
$PM_{2.5}$	Federal 24-Hour	Oakland	0	2	1
		SF Bay Area Air	3	13	3
Carbon Monoxide	State/Federal 8-Hour	Oakland	0	0	0
		SF Bay Area Air	0	0	0
NO_2	State 1-Hour	Oakland	0	0	0
		SF Bay Area Air	0	0	0

Notes:
PM_{10} monitoring was discontinued at Oakland in 2008.
PM_{10} and $PM_{2.5}$ are measured every sixth day in Bay Area sites, so the number of days exceeding the standard is estimated.
Source: BAAQMD Air Pollution Summaries (http://www.baaqmd.gov/Divisions/Communications-and-Outreach/Air-Quality-in-the-Bay-Area/Air-Quality-Summaries.aspx)

Table 11.2 shows that air quality as a result of exceedances of ozone and $PM_{2.5}$ and PM_{10} standards occur in the San Francisco Bay Area. In recent years, the State and federal ozone standards have been exceeded at least somewhere in the Bay Area on 8 to 10 days per year.

The Bay Area has exceeded the $PM_{2.5}$ standard on 3 to 13 sampling days per year. The Oakland monitoring site logged zero to 2 exceedances per year between 2012 and 2014. Standards for CO and NO_2, or any other criteria air pollutant, were not exceeded anywhere in the Bay Area during this time period.

Monitoring station measurements indicate that air quality in the vicinity of the Project generally performs well against State standards for criteria air pollutants with few exceedances of pollutant standards between 2012 and 2014, the most recent year available.

Toxic Air Contaminants

Besides the criteria air pollutants, there is another group of substances found in ambient air referred to as Hazardous Air Pollutants under the federal Clean Air Act and Toxic Air Contaminants (TACs) under the California Clean Air Act. These contaminants tend to be localized and are found in relatively low concentrations in ambient air. However, they can result in adverse chronic health effects if exposure to low concentrations occurs for long periods. They are regulated at the local, state, and federal level.

TACs are a broad class of compounds known to cause morbidity or mortality (cancer risk), and include, but are not limited to, the criteria air pollutants listed above. TACs are found in ambient air, especially in urban areas, and are caused by industry, agriculture, fuel combustion, and commercial operations (e.g., dry cleaners). TACs are typically found in low concentrations, even near their source (e.g., benzene near a freeway). Because chronic exposure can result in adverse health effects, TACs are regulated at the federal, state, and regional levels.

Diesel exhaust is the predominant TAC in urban air, and is estimated to represent about two-thirds of the cancer risk from TACs (based on the statewide average). According to the California Air Resources Board (CARB), diesel exhaust is a complex mixture of gases, vapors and fine particles. This complexity makes the evaluation of health effects of diesel exhaust a complex scientific issue. Some chemicals in diesel exhaust, such as benzene and formaldehyde, have been previously identified as TACs by CARB, and are listed as carcinogens either under State Proposition 65 or under the Federal Hazardous Air Pollutants programs.

CARB reports that recent air pollution studies have shown an association that diesel exhaust and other cancer-causing toxic air contaminants emitted from vehicles are responsible for much of the overall cancer risk from TACs in California. Particulate matter emitted from diesel-fueled engines (diesel particulate matter [DPM]) was found to comprise much of that risk. In August, 1998, CARB formally identified DPM as a TAC. DPM is of particular concern, since it can be distributed over large regions, thus leading to widespread public exposure. The particles emitted by diesel engines are coated with chemicals, many of which have been identified by U.S. Environmental Protection Agency (EPA) as hazardous air pollutants and by CARB as TACs. Diesel engines emit particulate matter at a rate about 20 times greater than comparable gasoline engines. The vast majority of diesel exhaust particles (over 90 percent) consist of $PM_{2.5}$, which are the particles that can be inhaled deep into the lung. Like other particles of this size, a portion will eventually become trapped within the lung, possibly leading to adverse health effects. While the gaseous portion of diesel exhaust also contains TACs, CARB's 1998 action was specific to DPM, which accounts for much of the cancer-causing potential from diesel exhaust. California has adopted a comprehensive diesel risk reduction program to reduce DPM emissions 85 percent by 2020. The U.S. EPA and CARB adopted low sulfur diesel fuel standards in 2006 that reduce diesel particulate matter substantially.

In cooler weather, smoke from residential wood combustion can be a source of TACs. Localized high TAC concentrations can result when cold stagnant air traps smoke near the ground and, with no wind, the pollution can persist for many hours, especially in sheltered valleys during winter. Wood smoke also contains a significant amount of PM_{10} and $PM_{2.5}$. Wood smoke is an irritant, and is implicated in worsening asthma and other chronic lung problems. BAAQMD Regulation 6, Rule 3, disallows wood-burning devices in new construction, except those meeting U.S. EPA emissions targets and approved by the Air Pollution Control Officer of the BAAQMD. Compliance with this rule can be assumed.

Sensitive Receptors

Some groups of people are more affected by air pollution than others. Children, the elderly, and people with respiratory disease or chronic health problems are typically more sensitive to air pollution. The land uses associated with possibly sensitive receptors include schools, hospitals, playgrounds, retirement homes, child-care centers, convalescent homes, medical clinics, and residences.

Odors

Objectionable odors may be associated with a variety of pollutants. Common sources of odors include wastewater treatment plants, landfills, composting facilities, refineries and chemical plants. Odors rarely have direct health impacts, but they can be very unpleasant and can lead to concern over possible health effects among the public. Each year the BAAQMD receives thousands of citizen complaints about objectionable odors.

Greenhouse Gases

Gases that trap heat in the Earth's atmosphere are called GHGs. These gases play a critical role in determining the Earth's surface temperature. Part of the solar radiation that would have been reflected back into space is absorbed by these gases, resulting in a warming of the atmosphere. Without natural GHGs, the Earth's surface would be about 61 degrees cooler.[1] This phenomenon is known as the greenhouse effect. However, scientists have proven that emissions from human activities such as electricity generation, vehicle emissions, and even farming and forestry practices, have elevated the concentration of GHGs in the atmosphere beyond naturally-occurring concentrations, enhancing the greenhouse effect and contributing to the larger process of global climate change. The six primary GHGs are:

- Carbon Dioxide (CO_2), emitted when solid waste, fossil fuels (oil, natural gas, and coal), and wood and wood products are burned;
- Methane (CH_4), produced through the anaerobic decomposition of waste in landfills, animal digestion, decomposition of animal wastes, production and distribution of natural gas and petroleum, coal production, incomplete fossil fuel combustion, and water and wastewater treatment;
- Nitrous oxide (N_2O), typically generated as a result of soil cultivation practices, particularly the use of commercial and organic fertilizers, fossil fuel combustion, nitric acid production, and biomass burning;
- Hydrofluorocarbons, primarily used as refrigerants;
- Perfluorocarbons, originally introduced as alternatives to ozone depleting substances and typically emitted as by-products of industrial and manufacturing processes; and
- Sulfur hexafluoride (SF_6), primarily used in electrical transmission and distribution.

Though there are other contributors to global warming, these six GHGs are identified explicitly by the EPA as threatening the public health and welfare of current and future generations.

[1] California Climate Action Team, 2006.

Global Warming Potential

The Global Warming Potential (GWP) concept is used to compare the ability of each GHG to trap heat in the atmosphere relative to CO_2, which is the most abundant GHG. CO_2 has a GWP of 1, expressed as CO_2 equivalent (CO_2e). Other GHGs, such as CH_4 and N_2O, are commonly found in the atmosphere at much lower concentrations, but with higher warming potentials, having CO_2e ratings of 21 and 310, respectively. Trace gases such as chlorofluorocarbons and hydrochlorofluorocarbons have much greater warming potential. Fortunately, these gases are found at much lower concentrations and many are being phased out as a result of global efforts to reduce destruction of stratospheric ozone. In the U.S.in 2010, CO_2 emissions account for about 84 percent of the GHG emissions, followed by CH_4 at about 9 percent and N_2O at just under 5 percent.[2]

Greenhouse Gas Emissions Inventories

Worldwide emissions of GHGs in 2004 were 49 billion tons of CO_2e per year. Global GHG emissions due to human activities have grown since pre-industrial times, with an increase of 70% between 1970 and 2004.[3]

In 2008, the U.S. emitted about 7 billion tons of CO_2e, a 14 percent increase from 1990. Emissions per capita have remained nearly level since 1990, as emissions have increased at about the same rate as the population.[4]

In 2009, California's net emissions were approximately 453 million metric tons of CO_2e, or about 6.5 percent of the U.S. emissions. This large number is due primarily to the sheer size of California compared to other states. By contrast, California has the fifth lowest state-wide per capita GHG emission rates in the country. 2009 total net emissions represent a 1.3 percent decrease from 2000 and a 6.1 increase from 1990 emissions levels.[5]

BAAQMD most recently updated the GHG emission inventory in 2010 using a base year of 2007.[6] In the Bay Area, fossil fuel consumption in the transportation sector (on-road motor vehicles, off-highway mobile sources, and aircraft) is the single largest source of the Bay Area's GHG emissions, accounting for 36.41% of the Bay Area's 95.8 million tons of GHG emissions in 2007. Industrial and commercial sources were the second largest contributors of GHG emissions with about 36.40% of total emissions. Domestic sources (e.g., home water heaters, furnaces) account for about 7% of the Bay Area's GHG emissions, and energy production accounted for 15.9% percent. Off-road equipment and agriculture make up the remainder with approximately 3% and 1.2% of the total Bay Area 2007 GHG emissions, respectively.

Potential Effects of Global Climate Change

Global Effects

Globally, climate change has the potential to impact numerous environmental resources through potential, though uncertain, impacts related to future air temperatures and precipitation patterns.

[2] U.S. EPA, April 15, 2012, Inventory of U.S. Greenhouse Gas Emissions and Sinks: 1990 – 2010, Table 2-1: Recent Trends in U.S. Greenhouse Gas Emissions and Sinks.

[3] Intergovernmental Panel on Climate Change, November 2007, Climate Change 2007: Synthesis Report, Figure 2.1.

[4] U.S. EPA, 2010, Climate Change Indicators in the United States, p. 11.

[5] California Energy Commission, Inventory of California Greenhouse Gas Emissions and Sinks: 1990 to 2009, December 2011.

[6] BAAQMD, February 2010, Source Inventory of Bay Area Greenhouse Gas Emissions, available at http://www.baaqmd.gov/Divisions/Planning-and-Research/Emission-Inventory/Greenhouse-Gases.aspx.

Scientific modeling predicts that continued GHG at or above current rates would induce more extreme climate changes during the twenty-first century than were observed during the twentieth century. A warming of about 0.2 degree Celsius (0.36 degree Fahrenheit) per decade is projected, and there are identifiable signs that global warming is taking place, including substantial ice loss in the Arctic. The projected effects of global warming on weather and climate are likely to vary regionally, but are expected to include the following direct effects, according to the International Panel on Climate Change.[7]

- Snow cover is projected to contract, with permafrost areas sustaining thawing.
- Sea ice is projected to shrink in both the Arctic and Antarctic.
- Hot extremes, heat waves, and heavy precipitation events are likely to increase in frequency.
- Future tropical cyclones (typhoons and hurricanes) will likely become more intense.
- Non-tropical storm tracks are projected to move poleward, with consequent changes in wind, precipitation, and temperature patterns. Increases in the amount of precipitation are very likely in high-latitudes, while decreases are likely in most subtropical regions.
- Warming is expected to be greatest over land and at most high northern latitudes, and least over the Southern Ocean and parts of the North Atlantic Ocean.

Potential secondary effects from global warming include global rise in sea level, impacts to agriculture, changes in disease vectors, and changes in habitat and biodiversity.

Effects on the State of California

According to CARB, some of the potential impacts in California of global warming may include loss in snow pack, sea level rise, more extreme heat days per year, more high ozone days, more large forest fires, and more drought years.[8] Several recent studies have attempted to explore the possible negative consequences that climate change, left unchecked, could have in California. These reports acknowledge that climate scientists' understanding of the complex global climate system, and the interplay of the various internal and external factors that affect climate change, remains too limited to yield scientifically valid conclusions on such a localized scale. Substantial work has been done at the international and national level to evaluate climatic impacts, but far less information is available on regional and local impacts. In addition, projecting regional impacts of climate change and variability relies on large-scale scenarios of changing climate parameters, using information that is typically at too general a scale to make accurate regional assessments.[9]

Below is a summary of some of the potential effects reported in an array of studies that could be experienced in California as a result of global warming and climate change:

- Air Quality – Higher temperatures, conducive to air pollution formation, could worsen air quality in California. Climate change may increase the concentration of ground-level ozone, but the magnitude of the effect, and therefore its indirect effects, are uncertain. For other pollutants,

[7] International Panel on Climate Change *Special Report on Emissions Scenarios, 2000,* www.grida.no/climate/ipcc/emission/002.htm, accessed July 24, 2007.

[8] California Air Resources Board, December 2006, *Public Workshop to Discuss Establishing the 1990 Emissions Level and the California 2020 Limit and Developing Regulations to Require Reporting of Greenhouse Gas Emissions*.

[9] Kiparsky, M. and P.H. Gleick, July 2003, *Climate Change and California Water Resources: A Survey and Summary of the Literature*.

the effects of climate change and/or weather are less well studied, and even less well understood.10 If higher temperatures are accompanied by drier conditions, the potential for large wildfires could increase, which, in turn, would further worsen air quality. However, if higher temperatures are accompanied by wetter, rather than drier conditions, the rains would tend to temporarily clear the air of particulate pollution and reduce the incidence of large wildfires, thus ameliorating the pollution associated with wildfires. Additionally, severe heat accompanied by drier conditions and poor air quality could increase the number of heat related deaths, illnesses, and asthma attacks throughout the State.[11]

- Water Supply – Uncertainty remains with respect to the overall impact of global climate change on future water supplies in California. For example, models that predict drier conditions suggest decreased reservoir inflows and storage and decreased river flows, relative to current conditions. By comparison, models that predict wetter conditions project increased reservoir inflows and storage, and increased river flows.12
- Hydrology – As discussed above, climate change could potentially affect the amount of snowfall, rainfall and snow pack; the intensity and frequency of storms; flood hydrographs (flash floods, rain or snow events, coincidental high tide and high runoff events); sea level rise and coastal flooding; coastal erosion; and the potential for salt water intrusion. Sea level rise can be a product of global warming through two main processes: expansion of seawater as the oceans warm, and melting of ice over land. A rise in sea levels could result in coastal flooding and erosion and could also jeopardize California's water supply. In particular, saltwater intrusion would threaten the quality and reliability of the state's major fresh water supply that is pumped from the southern portion of the Sacramento/San Joaquin River Delta. Increased storm intensity and frequency could affect the ability of flood-control facilities (including levees) to handle storm events.
- Agriculture – California has a $30 billion agricultural industry that produces half the country's fruits and vegetables. The California Climate Change Center notes that higher CO_2 levels can stimulate plant production and increase plant water-use efficiency. However, if temperatures rise and drier conditions prevail, water demand could increase; crop-yield could be threatened by a less reliable water supply; and greater ozone pollution could render plants more susceptible to pest and disease outbreaks. In addition, temperature increases could change the time of year that certain crops, such as wine grapes, bloom or ripen, and thus affect their quality.[13]
- Ecosystems and Wildlife – Increases in global temperatures and the potential resulting changes in weather patterns could have ecological effects on a global and local scale. In 2004, the Pew Center on Global Climate Change released a report examining the possible impacts of climate change on ecosystems and wildlife.[14] The report outlines four major ways in which it is thought that climate change could affect plants and animals: (1) timing of ecological events; (2)

[10] U.S. EPA, 2010, *Climate Change Indicators in the United States*.

[11] California Climate Change Center, July 2006, *Our Changing Climate: Assessing the Risks to California,* CEC- 500-2006-077.

[12] Brekke, L.D., et al, 2004, "Climate Change Impacts Uncertainty for Water Resources in the San Joaquin River Basin, California." *Journal of the American Water Resources Association*. 40(2): 149–164.

[13] California Climate Change Center, July 2006, *Our Changing Climate: Assessing the Risks to California,* CEC- 500-2006-077.

[14] Parmesan, C. and H. Galbraith, November 2004, *Observed Impacts of Global Climate Change in the U.S.*

geographic range; (3) species' composition within communities; and (4) ecosystem processes such as carbon cycling and storage.

REGULATORY ENVIRONMENT

Federal

Federal Clean Air Act

The federal Clean Air Act, enacted largely in its current form in 1970 and amended in 1977 and 1990, establishes the framework for federal air pollution control. The act directed the U.S. EPA to establish the National Ambient Air Quality Standards (NAAQS). An area that does not meet the federal standard for a pollutant is called a "nonattainment" area for that pollutant. For federal nonattainment areas, the Clean Air Act requires states to develop and adopt State Implementation Plans (SIPs), which are air quality plans showing how air quality standards will be attained. The Clean Air Act Amendments of 1990 added requirements for states with nonattainment areas to revise their SIPs to incorporate additional control measures to reduce air pollution.

The SIP is periodically modified to reflect the latest emissions inventories, planning documents, and rules and regulations of the air basins as reported by their jurisdictional agencies. U.S. EPA has responsibility to review all State SIPs to determine conformation to the mandates of the FCAAA, and to determine if implementation will achieve air quality goals. If the U.S. EPA determines a SIP to be inadequate, a Federal Implementation Plan may be prepared for the nonattainment area that imposes additional control measures. Failure to submit an approvable SIP or to implement the plan within the mandated timeframe may result in sanctions being denied to transportation funding and stationary air pollution sources in the air basin. In California, SIPs are prepared and adopted by the local or regional air districts (in the Bay Area, by the BAAQMD) and are reviewed and submitted to the U.S. EPA by CARB.

Attainment of Federal Standards and Conformity Analysis

Compliance with National Ambient Air Quality Standards

As noted above, if an area such as BAAQMD does not meet one of the NAAQS, the EPA designates it as nonattainment for that particular pollutant (see **Table 11.1**). Incremental progress is required toward meeting the NAAQS, and areas with the most acute problems must adopt the most stringent rules on new and existing emission sources. If an area does not make forward progress or fails to submit an adequate plan, sanctions may be imposed, such as withholding federal highway funds.

Conformity Analysis

Section 176(c) of the 1990 Clean Air Act amendments outlines the requirements for federally funded projects to conform to efforts to meet and sustain the NAAQS. Section 176(c) also assigns responsibility for conformity assurance to the federal agency undertaking (or funding) the project. Responsibility cannot be transferred by the responsible agency to EPA, state, or local agencies (e.g., BAAQMD). Conformity requires federally funded or supported activities not, (1) cause or contribute to any new air quality standard violation, (2) increase the frequency or severity of any existing standard violation, or (3) delay the timely attainment of any standard, interim emission reduction, or other SIP milestone aimed at bringing the region into attainment.

In 1993, the EPA issued the General Conformity regulations. The General Conformity regulations apply to all projects that would cause emissions of criteria pollutants above specified levels in areas designated non-attainment or maintenance. In the Bay Area, this rule applies to ozone precursors (ROG and NO_x) and CO in excess of 100 tons per year, or if the emissions are more than 10 percent of the inventory for the pollutant of concern. Projects that are subject to General Conformity must mitigate or fully offset the emissions cause by the action. This includes both direct (fossil fuel burning) and indirect (traffic) emissions. BAAQMD adopted and incorporated the General Conformity regulations into the SIP in 1994.

State

California Clean Air Act

The California Clean Air Act of 1988 focuses on attainment of the California Ambient Air Quality Standards (CAAQS), which, for certain pollutants and averaging periods, is more stringent than the comparable federal standards. Responsibility for achieving California standards is placed on the CARB and local air pollution control districts through district-level air quality management plans. The California Clean Air Act requires designation of attainment and nonattainment areas with respect to CAAQS. The California Clean Air Act also requires that local and regional air districts expeditiously adopt and prepare an air quality attainment plan if the district violates State air quality standards for CO, SO_2, NO_2, or zone. No locally prepared attainment plans are in place for areas that violate the State PM_{10} standards, because attainment plans are not required for those areas. The California Clean Air Act requires that the State air quality standards be met as expeditiously as practicable, but unlike the federal Clean Air Act, does not set precise attainment deadlines. Instead, the act established increasingly stringent requirements for areas that will require more time to achieve the standards.

CARB is primarily responsible for developing and implementing air pollution control plans to achieve and maintain the NAAQS. The CARB is primarily responsible for statewide pollution sources and produces a major part of the SIP. Local air districts are still relied upon to provide additional strategies for sources under their jurisdiction. The CARB combines this data and submits the completed SIP to U.S. EPA. Other CARB duties include monitoring air quality, in conjunction with air monitoring networks maintained by air pollution control and air quality management districts; establishing CAAQS, which in many cases are more stringent than the NAAQS; determining and updating area designations and maps; and setting emissions standards for new mobile sources, consumer products, small utility engines, and off-road vehicles.

State TAC Regulations

TACs in California are primarily regulated through the Tanner Air Toxics Act (Assembly Bill [AB] 1807) and the Air Toxics Hot Spots Information and Assessment Act of 1987 (AB 2588, or the Hot Spots Act). AB 1807 sets forth a formal procedure for CARB to designate substances as TACs. Research, public participation, and scientific peer review are necessary before ARB can designate a substance as a TAC. To date, CARB has adopted U.S. EPA's list of hazardous air pollutants as TACs and identified more than 21 additional TACS. Most recently, environmental tobacco smoke was added to CARB's list of TACs in 2007.

California Global Warming Solutions Act of 2006

AB 32, the California Global Warming Solutions Act (Health and Safety Code Section 38500 et seq.), was signed in September 2006. The Act requires the reduction of statewide GHG emissions to 1990 levels by the year 2020. This change, which is estimated to be a 25 to 35 percent reduction from current emission levels, will be accomplished through an enforceable statewide cap on GHG emissions that will be phased in starting in 2012. The Act also directs the CARB to develop and implement regulations to reduce statewide GHG emissions from stationary sources and address GHG emissions from vehicles. The CARB has stated that the regulatory requirements for stationary sources will be first applied to electricity power generation and utilities, petrochemical refining, cement manufacturing, and industrial/commercial combustion. The second group of target industries will include oil and gas production/distribution, transportation, landfills and other GHG-intensive industrial processes.

On December 11, 2008, CARB adopted its Climate Change Scoping Plan, which functions as a roadmap of CARB's plans to achieve GHG reductions in California required by AB 32 through subsequently enacted regulations. The Scoping Plan contains the main strategies California will implement to reduce CO_2e emissions by 174 million metric tons, or approximately 30 percent, from the State's projected 2020 emissions level of 596 million metric tons CO_2e under a business as usual scenario. The Scoping Plan also breaks down the amount of GHG emissions reductions the ARB recommends for each emissions sector of the State's GHG inventory. The Scoping Plan's recommended measures were developed to reduce GHG emissions from key sources and activities while improving public health, promoting a cleaner environment, preserving natural resources, and ensuring that the impacts of the reductions are equitable and do not disproportionately impact low-income and minority communities. These measures also put the State on a path to meet the long-term goal of reducing California's GHG emissions by 2050 to 80 percent below 1990 levels.

CARB has not yet determined what amount of GHG reductions it recommends from local government operations; however, the Scoping Plan does state that land use planning and urban growth decisions will play an important role in the state's GHG reductions because local governments have primary authority to plan, zone, approve, and permit how land is developed to accommodate population growth and the changing needs of their jurisdictions (meanwhile, ACRB is also developing an additional protocol for community emissions). CARB further acknowledges that decisions on how land is used will have large impacts on the GHG emissions that will result from the transportation, housing, industry, forestry, water, agriculture, electricity, and natural gas emission sectors. The Scoping Plan states that the ultimate GHG reduction assignment to local government operations is to be determined (CARB 2008).

California's Energy Efficiency Standards for Residential and Nonresidential Buildings

Known by the shorthand name of Title 24, this policy was established in 1978 in response to a legislative mandate to reduce California's energy consumption. Title 24 is updated periodically to allow for incorporation of new energy efficiency technologies and methods. The most recent update, in 2008, incorporated AB 32 mandates and advanced the energy efficiency requirements in order to meet California's energy needs. The 2013 update to the standards were built upon the previous standards and took effect in January 2014. Several State energy policy goals drive the design of the prior standards: the "Loading Order," which directs California's growing demand must first be met with cost-effective energy efficiency; Zero Net Energy goals for new homes by 2020 and commercial buildings by 2030; Governor Brown's Executive Order on Green Buildings; the Green Building Standards Code, and AB 32. The 2013 Standards will use 25 percent less energy for lighting, heating, cooling, ventilation, and water heating

than the 2008 Standards. Additionally, the 2013 Standards will result in a reduction of 170,500 tons of GHG emissions per year.

California Green Building Standards Code (2010), California Code of Regulations Title 24, Part 11

California's green building code, referred to as CALGreen, was developed to provide a consistent approach to green building within the State. Taking effect in January 2011, CALGreen lays out the minimum requirements for newly constructed residential and nonresidential buildings to reduce GHG emissions through improved efficiency and process improvements. It also includes voluntary tiers to further encourage building practices that improve public health, safety and general welfare by promoting the use of building concepts which minimize the building's impact on the environment and promote a more sustainable design. Local jurisdictions are required to adopt the CALGreen provisions. CALGreen is complimentary with California Energy Code, Title 24, Part 6, which continues to regulate energy efficiency in buildings. CALGreen references Title 24, Part 6 where relevant and several voluntary measures in the CALGreen building code require energy efficient that exceeds Title 24, Part 6 requirements by 15 or 30 percent. CALGreen requires that every new building constructed in California implement the following:

- Reduce water consumption by 20 percent,
- Divert 50 percent of construction waste from landfills
- Install low pollutant-emitting materials
- Require separate water meters for nonresidential buildings' indoor and outdoor water use
- Require moisture-sensing irrigation systems for larger landscape projects
- Require mandatory inspections of energy systems (e.g., heat furnace, air conditioner and mechanical equipment) for nonresidential buildings over 10,000 square feet to ensure that all are working at their maximum capacity and according to their design efficiencies.

Senate Bill 97—Modification to the Public Resources Code

Pursuant to Senate Bill 97, the California Natural Resources Agency reviewed and adopted the amendments to the CEQA Guidelines on December 30, 2010 prepared and forwarded by the Governor's Office of Planning and Research. The Amendments became effective on March 18, 2010, including the addition of the GHG emissions environmental topic and checklist items.

Regional

Bay Area Air Quality Management District

The BAAQMD regulates air quality in the nine-county San Francisco Bay Area Air Basin, including the Alameda County area and site of the proposed Project. The District primarily regulates stationary sources and develops plans to achieve and maintain air quality standards. The CARB and EPA have jurisdiction over mobile sources. To protect public health, BAAQMD has adopted plans to achieve ambient air quality standards. BAAQMD must continuously monitor its progress for plan implementation. BAAQMD must report this effort regularly to the CARB and the EPA. It must also periodically revise its attainment plans to reflect new conditions and requirements.

In general, the Bay Area has a moderately high potential for air pollution due to its large population, its refineries and other industry, and to a lesser extent, geography and climate. It is a nonattainment area

(ambient levels exceed the respective state or federal air quality standard) for ground-level ozone, PM_{10}, and $PM_{2.5.}$) Winds often move ozone precursors generated in Alameda County to other parts of the region, where smog is formed several hours later (hence the highest pollution levels in the area occur in the warmer inland valleys). BAAQMD tries to exercise a uniform emission control effort that will bring the entire region into compliance with state and federal standards as quickly as possible.

BAAQMD prepared its first ozone attainment plan to meet California standards in 1991. Approximately triennial assessments and revisions to the Clean Air Plan have subsequently been prepared, with the most recent in 2010. The Bay Area 2010 CAP provides a control strategy to reduce ozone, PM, TACs, and GHGs in a single, integrated plan.

ENVIRONMENTAL CONSEQUENCES AND MITIGATION MEASURES

Significance Criteria

Appendix G of the CEQA Guidelines (Environmental Checklist) contains a list of air quality effects that may be considered significant. Implementation of the Project would have a significant effect on the environment if it were to:

- Conflict with or obstruct implementation of the applicable air quality plan;
- Violate any air quality standard or contribute substantially to an existing or projected air quality violation;
- Result in a cumulatively considerable net increase of any criteria pollutant for which the project region is non-attainment under an applicable federal or state ambient air quality standard (including releasing emissions which exceed quantitative thresholds for ozone precursors);
- Expose sensitive receptors to substantial pollutant concentrations;
- Create objectionable odors affecting a substantial number of people;
- Generate greenhouse gas emissions, either directly or indirectly, that may have a significant impact on the environment; or
- Conflict with an applicable plan, policy or regulation adopted for the purpose of reducing the emissions of greenhouse gases.

The CEQA Guidelines state that, where available, the significance criteria established by the applicable air quality management or air pollution control district may be relied upon to make the above determinations. BAAQMD updated their thresholds on June 2, 2010 and the BAAQMD Guidelines in May 2012.

On March 5, 2012 the Alameda County Superior Court issued a judgment finding that BAAQMD had failed to comply with CEQA when it adopted its 2010 Thresholds. The court did not determine whether the Thresholds were valid on the merits, but found that the adoption of the Thresholds was a project under CEQA. The court issued a writ of mandate ordering BAAQMD to set aside the Thresholds and cease dissemination of them until BAAQMD had complied with CEQA.

This analysis is based upon the BAAQMD 2010 Thresholds. While it is possible to instead analyze the Project under BAAQMD's previous 1999 Thresholds, the newer thresholds are more conservative and

based upon current regulations, scientific understanding and methodologies and therefore considered the most appropriate for a conservative CEQA analysis.

Impact and Mitigation Measures

IMPACT 11.1: Construction Period Dust, Emissions, and Odors

POTENTIALLY SIGNIFICANT AND MITIGABLE IMPACT. Construction of the Project would result in temporary emissions of dust, criteria air pollutants, and odors that may result in both nuisance and health impacts. Without appropriate measures to control these emissions, these impacts would be considered significant.

Construction of the Project would involve removal of the asphalt parking lot surface, excavation and site preparation, and building erection. Although these construction activities would be temporary, they would have the potential to cause both nuisance and health-related air quality impacts.

PM_{10} is the pollutant of greatest concern associated with dust. If uncontrolled, PM_{10} levels downwind of actively disturbed areas could possibly exceed State standards. In addition, dust fall on adjacent properties could be a nuisance.

Construction impacts would also be a source of exhaust emissions from construction vehicles, which contribute to regional emission levels.

Construction emissions for the Project were computed using the CalEEMod emissions model. Construction was assumed to occur over an approximately 32-month period (beginning April 2017 and ending in December 2019). The CalEEMod inputs and results are included in Appendix B. Emissions from construction are summarized in **Table 11.3**.

TABLE 11.3: DAILY CRITERIA POLLUTANT EMISSIONS, CONSTRUCTION (POUNDS PER DAY)

Description	ROG	NO_X	PM_{10} *	$PM_{2.5}$ *
Project Construction	1.73	10.15	0.197	0.194
2010 BAAQMD Thresholds	*54*	*54*	*82*	*54*

* Applies to exhaust emissions only, not fugitive dust.

Source: Lamphier-Gregory compiled CalEEMod results included as Appendix B.

Notes: Construction emissions are "mitigated" assuming tier 4 engines, per rules in place by 2015. This is a conservative analysis as the CalEEMod program reports maximum daily emissions and the BAAQMD threshold applies to average daily emissions.

Construction-period emissions levels are below BAAQMD thresholds, as presented in **Table 11.3**. However, BAAQMD recommends implementation of construction mitigation measures to reduce construction-related emissions for all projects, regardless of the significance level of construction-period impacts. These basic measures are included in **Mitigation Measure Air Quality/GHG – 1** below and would further reduce construction-period criteria pollutant impacts.

Maximum daily construction-period dust emissions of 10.24 $PM_{2.5}$ and 19.61 PM_{10} have been calculated using CalEEMod (calculation sheets can be found in Appendix B). BAAQMD does not have a threshold of significance for fugitive dust impacts, but instead regards fugitive dust impacts as mitigated if appropriate management practices are implemented.

Mitigation Measure Air Quality/GHG – 11.1: Basic Construction Management Practices. The Project shall demonstrate proposed compliance with all applicable regulations and operating

procedures prior to issuance of demolition, building or grading permits, including implementation of the following BAAQMD Basic Construction Mitigation Measures.

- All exposed surfaces (e.g., parking areas, staging areas, soil piles, graded areas, and unpaved access roads) shall be watered two times per day.
- All haul trucks transporting soil, sand, or other loose material off-site shall be covered.
- All visible mud or dirt track-out onto adjacent public roads shall be removed using wet power vacuum street sweepers at least once per day. The use of dry power sweeping is prohibited.
- All vehicle speeds on unpaved roads shall be limited to 15 miles per hour.
- All roadways, driveways, and sidewalks to be paved shall be completed as soon as possible. Building pads shall be laid as soon as possible after grading unless seeding or soil binders are used.
- Idling times shall be minimized either by shutting equipment off when not in use or reducing the maximum idling time to 5 minutes (as required by the California airborne toxics control measure Title 13, Section 2485 of California Code of Regulations). Clear signage shall be provided for construction workers at all access points.
- All construction equipment shall be maintained and properly tuned in accordance with manufacturer's specifications. All equipment shall be checked by a certified mechanic and determined to be running in proper condition prior to operation.
- Post a publicly visible sign with the telephone number and person to contact at the Lead Agency regarding dust complaints. This person shall respond and take corrective action within 48 hours. The BAAQMD's phone number shall also be visible to ensure compliance with applicable regulations.

Resulting Level of Significance: BAAQMD significance thresholds for construction dust impacts are based on the appropriateness of construction dust controls. Implementation of **Mitigation Measure Air Quality/GHG – 11.1** would reduce the potential impact impacts related to construction period criteria pollutant emissions to a level of less than significant.

Because construction-period emissions do not exceed applicable criteria pollutant significance thresholds, additional construction mitigation measures would not be required to mitigate impacts.

IMPACT 11.2: Operational Emissions

LESS THAN SIGNIFICANT IMPACT. The Project would result in increased emissions from on-site operations and emissions from vehicles traveling to the site. However, the Project is below applicable threshold levels and the impact would be considered less than significant.

Emissions from operation of the Project could cumulatively contribute to air pollutant levels in the region. These air pollutants include ROG and NO_x that affect ozone levels (and to some degree – particulate levels), PM_{10}, and $PM_{2.5}$. Emissions of air pollutants associated with the Project were predicted using the CalEEMod emissions model recommended for use by BAAQMD. Specifics of trip generation were used from the traffic study prepared for this analysis.

Trip generation rates used in the CalEEMod model run were used from the traffic study prepared for this analysis. The CalEEMod model also predicts area source emissions associated with the proposed Project.

Those sources, which include water and space heating, are minor compared to emissions associated with traffic.

Area and mobile emissions associated with the proposed Project are reported in **Table 11.4**. These emissions are compared to BAAQMD significance thresholds.

TABLE 11.4: MAXIMUM DAILY AND ANNUAL REGIONAL AIR POLLUTANT EMISSIONS, OPERATIONS

Description	ROG	NO_X	PM_{10}	$PM_{2.5}$
Project Emissions, Daily (pounds per day)	2.01	0.86	0.01	0.01
BAAQMD Daily Significance Thresholds	*54*	*54*	*82*	*54*
Project Emissions, Annual (tons per year)	0.36	0.15	0.09	0.03
BAAQMD Project Annual Significance Thresholds	*10*	*10*	*15*	*10*

Source: Lamphier-Gregory compiled CalEEMod results included as Appendix B.

Notes: This is a conservative analysis as the CalEEMod program reports maximum daily emissions and the BAAQMD threshold applies to average daily emissions. Additionally, operational emissions were modeled for the proposed project and do not discount the existing operational emissions.

Daily and annual air emissions predicted with build-out of the proposed Project are reported in **Table 11.4** above and compared against BAAQMD thresholds. The operational criteria pollutant emissions would be below the significance thresholds established by BAAQMD. Therefore, the Project would have a less than significant impact on regional air quality.

IMPACT 11.3: Carbon Monoxide

LESS THAN SIGNIFICANT IMPACT. BAAQMD presents the screening level that localized carbon monoxide concentrations should be studied at affected intersections where traffic is increased to more than 44,000 vehicles per hour (or 24,000 vehicles per hour where mixing is substantially limited, such as in a tunnel). This screening level represents the volume of traffic at which a significant impact related to carbon monoxide would be possible. Based on traffic volumes in the vicinity, it is not anticipated the Project will affect intersections of that volume and therefore, the impact related to carbon monoxide is less than significant.

IMPACT 11.4: Construction-Period Exposure of Sensitive Receptors

LESS THAN SIGNIFICANT IMPACT. Construction activities would expose nearby sensitive receptors to toxic air contaminants during the construction period, but the maximum exposure risk would be below the thresholds of significance under BAAQMD criteria for cancer, chronic hazard, and $PM_{2.5}$ exposure. This would be a less than significant impact.

Construction-Period Exposure of Sensitive Receptors

For the purpose of assessing impacts of a proposed Project on exposure of sensitive receptors to risks and hazards, the threshold of significance is exceeded when the Project-specific cancer risk exceeds 10 in one million, the non-cancer risk exceeds a Hazard Index of 1 (or cumulative risk of 100 in one million or a Hazard Index of 10 respectively is exceeded), and/or the annual average $PM_{2.5}$ concentration would

exceed 0.3 μg/m^3 (or cumulative annual average $PM_{2.5}$ concentration would exceed 0.8 μg/m^3). Examples of sensitive receptors are places where people live, play, or convalesce and include schools, hospitals, residential areas, and recreation facilities.

Youth residing at the site as well as nearby residential neighborhoods (as close as about 175 feet from construction-activities) are considered sensitive receptors when it comes to health risks. A Construction Health Risk Assessment was performed (included in Appendix B), which used the recommended EPA dispersion model AERSCREEN to determine the potential health risks related to diesel exhaust from construction equipment.

For the maximum exposed individual, including conservative age sensitivity factor of 10 to account for young children, the inhalation cancer risk would be 4.08 in 1 million (compared to a threshold of 10 in 1 million), the maximum chronic hazard index would be 0.008 (compared to a threshold of 1) and the annual average $PM_{2.5}$ concentration would be 0.042 μg/m^3 (compared to the threshold of 0.3 μg/m^3).

Additionally, the Project vicinity is largely built-out or preserved in its natural state. There are no additional projects to take into account for cumulative localized construction-period impacts.

Exposure risks for the maximally exposed individual are below threshold levels; therefore, the impact related to construction-period exposure would be less than significant.

IMPACT 11.5: Operational-period Exposure of Sensitive Receptors

LESS THAN SIGNIFICANT IMPACT. The Project proposes to move the location of sensitive receptors on the site (i.e., youth residing at Camp Sweeney) and to increase their number. The exposure risk to on-site sensitive receptors would be below applicable threshold levels and therefore, the impact would be less than significant.

Youth residing at Camp Sweeney would be considered sensitive receptors. The proposed campus is located over 1,000 feet northeast of I-580 and is not within 1,000 feet of any off-site stationary sources of air toxins according to BAAQMD's Stationary Source Screening Analysis Tool.[15] Also according to this screening tool, on-site sources, including an emergency generator at the Las Vistas Facility, would be below cumulatively considerable health risk levels. Therefore, the health risk at this location for youth residing at the site is below threshold levels and the impact would be considered less than significant.

Following construction, none of the proposed uses would be considered a significant stationary source of air toxins.[16] While details are not currently available, any new emergency generators proposed with this Project would meet applicable regulatory requirements to avoid substantial health risks. There would be no significant impact related to the operational period health risks with the Project as a source of air toxins.

Odors

Typical sources of objectionable odors include chemical plants, sewage treatment plants, large composting facilities, rendering plants, and other large industrial facilities that emit odorous compounds.[17] Development of the Project would not include any activities that are typical sources of objectionable odors. Land uses near the Project area are not those typically associated with

[15] BAAQMD. Alameda May 2012. Stationary Source Screening Analysis Tool, available at: http://www.baaqmd.gov/Divisions/Planning-and-Research/CEQA-GUIDELINES/Tools-and-Methodology.aspx.

[16] BAAQMD. May 2012. California Environmental Quality Act Air Quality Guidelines, p. 4-2.

objectionable odors. Trash would be kept in enclosed containers and kitchens would be equipped with appropriate emission controls, as required by building, health and air quality regulations. Therefore, the Project would have no impact in relation to odors.

Greenhouse Gas Emissions

BAAQMD provides two alternative quantitative thresholds, a brightline threshold of 1,100 metric tons of CO_2e per year to assess smaller projects or an efficiency-based threshold of 4.6 metric tons CO_2e per Service Population per year for larger projects. BAAQMD defines the Service Population as the number of residents and employees generated by the project. For a conservative analysis, the Project is assessed against both of these thresholds for this analysis.

IMPACT 11.6: Increased Greenhouse Gas Emissions

LESS THAN SIGNIFICANT IMPACT. Construction and operation of the proposed Project would be additional sources of GHG emissions, primarily through consumption of fuel for transportation and energy usage on an ongoing basis. However, additional emissions due to the Project are below threshold levels and are therefore considered a less than significant impact.

Temporary construction-related exhaust would be an additional source of GHG emissions that could contribute to regional greenhouse gas emissions. BAAQMD does not have an adopted threshold of significance for construction-related GHG emissions, though recommends quantification and a determination regarding significance in relation to meeting AB 32 goals. Standard practice is to divide the construction emissions by 40 years (an average building life) and add that to the operational emissions. Per the CalEEMod results (Appendix B), construction-period CO_2e would total 1,035 metric tons, which would equate to an average of 26 metric tons per year divided over the lifespan of the building.

Increased GHG emissions from on-site operations and emissions from vehicles traveling to/from the site would also contribute to regional GHG emissions. As discussed previously, Project emissions were predicted using the CalEEMod emissions model recommended for use by BAAQMD.

Area and mobile emissions associated with the proposed Project, as well as construction emissions, are reported in **Table 11.5** and compared to BAAQMD significance thresholds.

TABLE 11.5: GHG EMISSIONS

Description	Metric tons CO_2e per year
Project Emissions, Operational	155
Project Emissions, Construction (averaged over 40 years)	26
Project Emissions, Total	**181**
BAAQMD Project Annual Significance Threshold	*1,100*
Project Service Population	170

[17] Ibid., Table 3-3.

Project Emissions, Total (per Service Population)	**1.1**
BAAQMD Project Service Population Significance Threshold	*4.6*

Source: Lamphier-Gregory compiled CalEEMod results included as Appendix B.

Notes: This is a conservative analysis as operational emissions were modeled for the proposed project and do not discount the existing operational emissions.

As shown in **Table 11.5**, GHG emissions would be below the significance thresholds established by BAAQMD. Therefore, the Project would have a less than significant impact related to increased GHG emissions.

Conflict with Air Quality or GHG Reduction Plans

As noted in the project description (Chapter 3), the Project has been designed to meet high standards of sustainability, specifically a minimum level of LEED Silver Certification, and potentially also qualification as a Net-Zero energy project.

This would be achieved through detailed design criteria for the building envelope: walls, floors, roof, and windows and potential inclusion of solar photovoltaic panels, both on the roofs of the buildings and over open parking areas. In addition to design features, the Project would comply with the County's standards for waste diversion and purchasing procedures.

For these reasons, it is anticipated the Project would be found to be consistent with the Alameda County Climate Action Plan for Government Services and Operations (adopted by the Board of Supervisors on May 4, 2010).

Similarly, the Project's design features would be consistent with applicable Bay Area 2010 Clean Air Plan control measures.

Additionally, emissions associated with the development of the proposed Project were analyzed per the BAAQMD CEQA Guidelines. BAAQMD's thresholds and methodologies take into account implementation of state-wide regulations and plans, such as the AB 32 Scoping Plan and adopted state regulations such as Pavley and the low carbon fuel standard and found to be below emissions threshold levels.

Therefore, there would be no impact in relation to conflict with air quality plans or GHG reduction plans.

Cumulative Air Quality Impacts

Additional analysis to determine cumulative air quality impacts of the Project is not necessary. In developing thresholds of significance for air pollutants, BAAQMD considered the emission levels at which a Project's individual emissions would be cumulatively considerable. Because the Project emissions during construction and operation would not exceed these thresholds, they would not have a cumulatively considerable effect. There would be no additional significant cumulative air quality or GHG emissions impacts.

12

HAZARDS AND HAZARDOUS MATERIALS

ENVIRONMENTAL SETTING

A hazardous material is a substance or combination of substances which, because of its quantity, concentration, or physical, chemical or infectious characteristics, may either (1) cause, or significantly contribute to, an increase in mortality or an increase in serious, irreversible or incapacitating reversible illness; or (2) pose substantial present or potential hazards to human health and safety, or the environment when improperly treated, stored, transported or disposed of or otherwise managed.

As defined by Title 22 of the California Code of Regulations (CCR), hazardous materials are grouped into the following four categories: toxic, ignitable, corrosive and reactive. Toxic substances may cause short-term or long-lasting health effects, ranging from temporary effects to permanent disability or even death, depending on such factors as concentration, route of exposure and duration of exposure. Carcinogens (substances known to cause cancer) are a special class of toxic substances. Ignitable substances are hazardous because of their ability to burn. Gasoline and natural gas are examples of ignitable substances. Corrosive materials—strong acids and bases, such as lye or sulfuric (battery) acid—can cause severe burns or damage materials. Reactive materials may cause explosions or generate toxic gases. Explosives, pure sodium or potassium metal (which react violently with water) and cyanide are examples of reactive materials.

Hazardous waste, which is a subset of hazardous material, refers to hazardous material that is to be abandoned, discarded, or recycled.

Hazardous Materials

An Environmental Site Assessment was prepared by RGA Environmental in April 2015 and included the following summary findings:

Available historic references indicate that the Project site and immediate environs (the 206-acre Fairmont Campus) were undeveloped grassy slopes with scattered oak trees from at least 1936 until sometime prior to 1946, when two livestock feeding or containment pens were in place at the south center of the parcel, which was part of a larger 91-acre tract transferred to County ownership in 1936. In 1950, the County constructed a juvenile detention facility, which consisted of two dormitory buildings, an administration building, and the gymnasium. An intake building and additional off-site dormitories were constructed between 1968 and 1974, as were the existing parking lots along the westerly parcel margin. All of the structures except the gymnasium were demolished in 2009 after a new combined juvenile court and detention facility was constructed on adjacent land to the northeast in 2007. The gymnasium is in active use.

Documents from the Alameda County Environmental Health Services Department confirm that three underground fuel storage tanks were previously located on the property, including one 10,000-gallon diesel tank that was closed in-place in 1998, and a 7,000-gallon fuel oil and a 325- gallon diesel tank that

were removed in 1993 and 1994. Confirmatory soil and groundwater analysis indicate that there is no environmentally-significant residual petroleum hydrocarbon contamination from these tanks. Visual inspection of the site did not reveal the presence of stressed vegetation, unusual or noxious odors, liquid or hazardous materials spills, underground or aboveground storage tanks, or groundwater monitoring wells. At the time of the survey, there were no known pending environmental regulatory actions concerning the subject property. No evidence of improper storage, use or disposal of any paints, cleaners or chemicals was observed during the assessment. Ultra-mafic (serpentine) bedrock, which can be the source of naturally occurring asbestos, occurs in some areas of the East Bay Hills. Sampling and analysis of any site soils that may be disturbed by construction or excavation may therefore be required in conformance with CARB regulations.

Of the environmental databases that were searched, none of the listed hazardous release sites appear to have the potential to adversely affect the soil or groundwater at the subject property, and none represent recognized environmental conditions for the property. The adjacent properties include currently undeveloped vegetated land to the north, the 213,000-square-foot Alameda County Juvenile Hall/Court complex to the east, several Alameda County Probation Department buildings to the south, and a single-family residential subdivision to the west, across Fairmont Drive.

A limited visual inspection conducted from the exterior property boundaries established the presence of an active 6,000-gallon aboveground diesel storage tank on the abutting parcel to the south. No evidence of spills or leaks was observed near the tank or within its fenced enclosure. Otherwise, the visual inspection did not reveal the presence of above ground storage tanks containing hazardous materials, drums containing unknown quantities or types of hazardous or solid wastes, material spills, chemicals or other raw materials spills, pits or sumps; stressed vegetation, unusual or noxious odors, disposal wells, or dry wells.

A Phase I Environmental Site Assessment performed By RGA/Terracon revealed no evidence of recognized environmental conditions in connection with the property, except for the following controlled recognized environmental condition at the site—two former leaking underground fuel storage tanks that were removed under environmental agency oversight in 1993 and 1994, and a non-leaking underground fuel storage tank that was closed in-place in 1998. A 'Case Closure' letter was issued by the Alameda County Environmental Health Services Department for the tank removals/closure in-place on January 19, 2000. Based on the available file documentation, the former presence of the tanks does not represent a current recognized environmental condition for the Project site.

In January 2000, the Alameda County General Services Agency received a Remedial Action Completion Certification from the Alameda County Health Care Services Agency regarding three underground storage tanks at the site of the former Juvenile Hall.

Aviation Operations in Site Vicinity

The Project site is located approximately 4 miles east of the Metropolitan Oakland International Airport, and approximately 3 miles north of the Hayward Executive Airport. There are no private aviation facilities in the vicinity of the site.

Wildland Fire Hazard

The Project site is located in a suburban location on the fringe of a semi-rural area near Lake Chabot Regional Park's rolling grassy hills. The site itself consists of large open parking lots with a number of

mature eucalyptus and other trees and shrubs at the edges. The nearest Alameda County Fire Department Station to the site is Station 3, located a few minutes away at 1430 164th Avenue. This station consists of two engine companies and currently services the greater Fairmont Campus facilities, all of the Ashland area and major sections of Highways 580 and 238.

REGULATORY SETTING

Storage, handling and documentation of hazardous materials and hazardous wastes are governed by federal, state and local laws designed to protect human health and the environment. Agencies involved in enforcing these regulations include the U.S. EPA, the State Department of Toxic Substances Control, the San Francisco RWQCB, the BAAQMD and the Alameda County Department of Environmental Health. Workplace safety regulations are enforced by the respective federal and state occupational safety and health administration. The federal agency, administered by the U.S. Department of Labor, is the Occupational State and Health Administration. Its state counterpart is the Division of Occupational Safety and Health, which is administered by the California Department of Industrial Relations.

Federal regulations are contained primarily in the Resource Conservation and Recovery Act and the Comprehensive Environmental Response, Compensation and Liability Act. These Acts provide the federal government requirements for identification of hazardous materials and wastes, remediation of hazardous wastes in soil and groundwater, and reporting. Hazardous waste identification is based on the source of the waste or the physical/chemical nature of the waste. Remediation requirements are determined on a site-specific basis in conjunction with lead state or local agencies, but these acts include federal guidance pertaining to minimum acceptable remedial actions. Reporting requirements under these two acts are designed to assure that known releases of hazardous constituents are reported and that federal agencies participate in the remedial process either directly or through state or local lead agencies.

State regulations in California pertaining to hazardous materials and wastes are typically equivalent to, or more stringent than, federal requirements. Some materials and wastes considered hazardous under California law are not hazardous under federal law. Consequently, the U.S. EPA often delegates regulatory authority and hazardous waste site oversight to California agencies. Similarly, the state Division of Occupational Safety and Health standards are typically more stringent than federal Occupational State and Health Administration standards, and U.S. Department of Labor typically delegates responsibility to the California Department of Industrial Relations.

California hazardous waste material and waste regulations are contained in the California Hazardous Waste Control Act and the California Hazardous Substance Account Act. Hazardous materials and waste regulations are contained in the CCR, Titles 22 and 26. Regulations for occupational safety and health are contained in CCR Title 8. Further, pursuant to the California Health and Safety Code, Section 25503.3(c), facilities denoted as Priority 1 High Risk Facilities[1] are required to prepare a Hazardous Materials Business Plan. The plan must include an Emergency Response Plan and Contingency Plan that specify how a facility operator would manage an accident involving hazardous materials, including how to safely evacuate the site. None of the proposed sites have Priority 1 High Risk Facilities.

The Department of Toxic Substances Control is the lead agency for enforcement of California regulations and, where so empowered, federal regulations. Depending on the nature of contamination at a given

[1] As defined by the federal and state thresholds for Acute Hazardous Materials. These facilities are identified by the local fire department and/or emergency services.

site (particularly where the primary concern is groundwater contamination), the appropriate regional water quality control board may be the lead agency. The proposed sites for the Project are all under the jurisdiction of the San Francisco RWQCB. At sites where excavation of soils containing hazardous wastes is required, the BAAQMD may impose requirements for protection of ambient air quality from dust and vapors. Alameda County's Department of Environmental Health Services is another key agency in implementing state programs at the local level.

ENVIRONMENTAL CONSEQUENCES AND MITIGATION MEASURES

Significance Criteria

The Project would have a significant environmental impact if it were to result in:

- Creation of a significant hazard to the public or the environment through the routine transport, use or disposal of hazardous materials.
- Creation of a significant hazard to the public or the environment through reasonably foreseeable upset and accident conditions involving the release of hazardous materials into the environment.
- The emission of hazardous emissions or the handling of hazardous or acutely hazardous materials, substances or wastes within one-quarter mile of an existing or proposed school.
- Construction on a site which is included on a list of hazardous materials sites compiled pursuant to Government Code Section 65962.5 and, as a result, creation of a significant hazard to the public or the environment.
- A safety hazard for people residing or working within an area subject to an airport land use plan or within 2 miles of a public airport or public use airport.
- A safety hazard for people residing or working in the vicinity of a private airstrip.
- Impairment of implementation of, or physical interference with, an adopted emergency response plan or emergency evacuation plan.
- Exposure of people or structures to a significant risk involving wildland fires.

Impacts and Mitigation Measures

IMPACT 12.1: Hazard Related to Routine Transport, Use or Disposal of Hazardous Materials

POTENTIALLY SIGNIFICANT AND MITIGABLE IMPACT. State-mandated Asbestos Notifications filed by the Alameda County General Services Agency indicate that buildings at the existing Camp Sweeney contain asbestos materials. Demolition of existing buildings could expose people to asbestos materials, which are a known health hazard. This would be a potentially significant impact.

> **Mitigation Measure Hazards – 12.1: Safe Removal of Asbestos During Demolition.** The California Health and Safety Code requires that employees and contractors working in buildings constructed before 1979 and known to include asbestos-containing materials are notified of

their presence. Demolition of existing Camp Sweeney buildings should be undertaken by contractors equipped and trained in the safe removal of asbestos-containing materials. This would reduce the health risks of asbestos containing materials during demolition to a level of less than significant.

Resulting Level of Significance: Implementation of **Mitigation Measure Hazards – 12.1** would reduce the potentially significant impact of exposure to asbestos containing materials to a less than significant level.

IMPACT 12.2: Hazard Related to Reasonably Foreseeable Upset and Accident Conditions Involving the Release of Hazardous Materials

LESS THAN SIGNIFICANT IMPACT. Construction and operation of the proposed Project would not require the use, transportation, or storage of significant quantities of hazardous materials. Although some common household and industrial hazardous materials may be used, they would require proper disposal and would not occur in significant quantities. It is also unlikely that any foreseeable upset or accident associated with the construction and operation of the proposed Project would involve the release of significant quantities of hazardous materials that would pose a threat to public health or the environment.

Hazard Related to Handling of Hazardous Materials within One-Quarter Mile of an Existing or Proposed School

NO IMPACT. Construction and operation of the proposed Project would not require the handling of significant quantities of hazardous materials. The site is not within one-quarter mile of any existing or proposed school.

Construction on a Listed Hazardous Materials Site

NO IMPACT. The Project site is not included on a list of hazardous materials sites pursuant to Government Code Section 65962.5.

Safety Hazard near Public Airports

NO IMPACT. As noted, the Project site is 3 and 4 miles from the nearest airport (Hayward Executive Airport and Metropolitan Oakland International Airport, respectively) and the operation of these aviation facilities presents no significant hazard to those at the existing Camp Sweeney or at the new location. Replacing and expanding the Camp Sweeney operations as proposed at the replacement site would create no new aviation-related safety hazards.

Safety Hazard in the Vicinity of a Private Airstrip

NO IMPACT. The Project site is not within the vicinity of any private airstrip.

Impairment/Interference with Emergency Response/Evacuation Plan

NO IMPACT. The Project site does not have facilities that pose a high risk of an accident for the release of hazardous materials. No Emergency Response Plan or Contingency Plan specifying how to evacuate people from the accident site is required.

Exposure to Risk Involving Wildland Fires

NO IMPACT. The site is not located in an area subject to wildland fire hazards.

13

PUBLIC SERVICES

The current Camp Sweeney operation is located on a site within Alameda County's 206-acre Fairmont Campus which it shares with the Juvenile Justice Center and several other public health related facilities. The proposed Replacement Project would relocate Camp Sweeney to a nearby, but currently vacant portion of the Fairmont Campus where completely new buildings would be constructed, providing a co-educational component and increased capacity and with physical features (i.e., buildings, grounds, and program elements) better designed for serving the identified needs of the youth population that would be housed there. The existing operation of Camp Sweeney and the proposed operation at the new site rely on the public services discussed in this chapter, which include fire protection, police, schools, parks and recreation facilities solid waste, and libraries.

Significant impacts involving public services would occur if the Project would result in emergency response times for fire and police services exceeding established goals or result in the need for additional facilities, such as construction of a new fire station or landfill facility. Other significance thresholds would be reached if the Project were to result in a large influx of new students to the local public schools system, or increased staffing levels for public services agencies.

ENVIRONMENTAL SETTING

The existing Camp Sweeney site is located in a portion of unincorporated Alameda County immediately east of the City of San Leandro. This portion of Alameda County is on the northerly edge of the County's Castro Valley Planning Area. Generally, public services are provided to this site through Alameda County, even though it is nearly adjacent to the San Leandro city limits.

Fire Protection

Fire protection services in San Leandro and the adjoining unincorporated areas of San Lorenzo, Cherryland, Ashland and Castro Valley are provided by the Alameda County Fire Department (ACFD). The City of San Leandro Fire Department was consolidated with the ACFD in 1995. The ACFD maintains offices at the San Leandro City Hall and staffs five fire stations in San Leandro. ACFD is responsible for fire suppression and prevention, emergency medical response, hazardous materials and disaster response, rescue, and community education and training. It has mutual response agreements with the Oakland Fire Department for coverage of Bay-O-Vista and the South Oakland Hills, and mutual aid agreements with other departments in the County for major emergencies (City of San Leandro, 2002)

The nearest ACFD station to the Project site is Station 3, located at 1430 164th Avenue. This station consists of two engine companies and currently services the existing Camp Sweeney. This station also services all of the Ashland area and major sections along I-580 and State Route 238. Response times from this station to the site are typically under five minutes and there are few fire-fighting constraints. Additionally, two 100-foot aerial ladder trucks are located in San Leandro at Stations 9 and 12, and are

able to serve this site if needed. Each fire station is staffed continually by a captain, an engineer, and firefighters. Staffing levels are stable and are not expected to change substantially during the coming years.

The ACFD responds to 81 percent of its calls for fire and medical emergencies in 3 minutes, or less, which is higher than the 4:53 minute median for all fire departments in the county and exceeds the National Fire Protection Association guideline of a 6-minute response at least 90 percent of the time.[1]

The ACFD reviews all major development applications to ensure that emergency access concerns are addressed, and that sufficient water capacity and pressure are available to address fire-fighting needs. The ACFD also participates with other jurisdictions in hazardous materials response and vegetation management to reduce the risk of urban wildfires.

Police

Alameda County

Police protection in Castro Valley is provided by the Alameda County Sheriff's Department, and is funded by the County General Fund. The Sheriff's Department serves as both a countywide law enforcement agency and a community police department. The Castro Valley area is provided with community police services from the Eden Township Substation on 150th Avenue in San Leandro. From that facility the county sheriff provides emergency dispatch services, receiving 911 calls and dispatching patrols. The sub-station occupies a building originally constructed in 1953 that is overcrowded and inadequate to meet the Sheriff's Office's needs despite several alterations. The Office's Records and Crime Analysis divisions are located in a separate building that also houses the Emergency Services Dispatch Center. The Sheriff's Office also operates the Community-Oriented Policing and Problem Solving program providing bicycle patrols, community walks, and works with residents on a variety of programs.

Average response times for the Sheriff's Office are 11 minutes 48 seconds for calls requiring an immediate emergency response and 17 minutes 13 seconds for nonemergency calls requiring an urgent response. This is substantially higher than the 4 minutes 25 seconds median emergency response time for all Alameda county police service providers. Response times in Castro Valley are somewhat better than in the less-densely developed Livermore Valley. On a per capita basis, the Department's staffing levels are lower than countywide with 1.4 sworn officers per 1,000 residents compared with 1.6 per 1,000 residents for all county police service providers.[2]

The Sheriff's Office is planning to consolidate its existing law enforcement facilities in a new 220,000-square-foot complex to be constructed on the site of the former Fairmont Animal Shelter, located above the Juvenile Justice Center on Fairmont Drive. Their proposed project will allow relocation of services from the Eden Township Station as well as the Coroner's Bureau now located in downtown Oakland.

City of San Leandro

Within the nearby City of San Leandro, law enforcement is provided by the City's Police Department. The Department's headquarters are located at 901 East 14th Street in the Civic Center complex. San Leandro is divided into seven beats for patrol functions. Each beat is patrolled by at least one officer on

[1] Castro Valley General Plan (2012), p. 9-9.

[2] Ibid., p. 9-10.

a 24-hour basis. In 2001, personnel included 96 authorized (or sworn) officers, equating to a ratio of about 1.2 sworn officers per 1,000 residents. This is lower than the national average of 1.8 but is close to the average ratio for cities in Alameda County.[3]

Schools

The Camp Sweeney site is within the San Lorenzo Unified School District boundaries. Most of the San Lorenzo Unified School District (USD) is beyond San Leandro's boundaries, serving San Lorenzo, Ashland, Cherryland, and parts of the City of Hayward. Enrollment trends within the San Lorenzo USD suggest that expansion of facilities will be needed in the future, particularly on the easterly side of the District outside of the City of San Leandro. Partly to address this need, both residential and nonresidential development within the San Lorenzo USD is currently subject to a school impact fee.[4] The Camp Sweeney Project is a public facility, not a school, and would not be subject to the District's school impact fee.

Parks and Recreation

Regional Parks

The East Bay Regional Park District (EBRPD) provides and manages the regional parks for Alameda and Contra Costa counties, a 1,700-square-mile area, which is home to 2.7 million people. The EBRPD facilities consist of 65 regional parks, 113.000 acres of land and over 1,200 miles of trails. The EBRPD Master Plan provides policies and guidelines for achieving the highest standards of service in resource conservation, management, interpretation, public access and recreation. These policies seek to maintain a careful balance between the need to protect and conserve resources and the recreational use of parklands. EBRPD's Anthony Chabot Regional Park is located near the existing Camp Sweeney site.

Castro Valley

Castro Valley has about 325 acres of neighborhood and community parks, which is approximately 5.3 acres of local parkland for every 1,000 residents, or about the same ratio as in Hayward but a higher ratio than in San Leandro. Castro Valley is part of the 64 square mile service area of the Hayward Area Recreation and Park District. The District serves the City of Hayward, as well as the major unincorporated areas of Castro Valley, San Lorenzo, Cherryland, Ashland and Fairview.

Solid Waste

The Castro Valley Sanitary District provides solid waste services at the Camp Sweeney site under an exclusive solid waste franchise agreement with the Alameda County Waste Management Authority. All jurisdictions within Alameda County must continue to pursue programs that divert waste from landfills through recycling, composting and source reduction strategies.

Solid waste from Camp Sweeney is transported to the Altamont landfill in eastern Alameda County. The Alameda County Waste Management Authority has a policy of maintaining at least 50 years of disposal capacity in the County's landfills. In the early 2000s, Alameda County approved a conditional use permit

[3] San Leandro General Plan (2002), p. 8-2.

[4] Ibid., p. 8-7.

to expand landfill capacity at Altamont by 40 million tons. Barring any major import of waste into the County from other jurisdictions, the expanded landfill should have capacity well beyond 25 years.

Libraries

Alameda County

The Alameda County Library provides library services in unincorporated Alameda County. The Camp Sweeney site is part of unincorporated Alameda County within the Castro Valley planning area. Therefore, Alameda County would provide library services to the site. The nearest County library branch is located on Redwood Road in urban Castro Valley. Alameda County Library's Jail Services program provides library services and literacy/life skills instruction to the more than 4,000 men and women held in County jails. The programs are designed for people who will be incarcerated for extended periods of time. The length of incarceration provides enough time for participants in the literacy/life skills programs to benefit from the instruction offered. However, youth in custody at Camp Sweeney are there only for short-term (6- to 12-month) durations. Given the temporary nature of their stay at Camp Sweeney, the programs offered by the library do not meet the needs of the youth there.

REGULATORY/POLICY SETTING

Federal

Federal Emergency Management Agency

The Federal Emergency Management Agency is an independent agency of the federal government, established in 1979 via executive order. The Federal Emergency Management Agency provides direction and assistance to state and local governments, but does not regulate approaches to emergency planning or response.

State

Emergency Response

California Government Code Section 8607(a) authorizes establishment of the Standardized Emergency Management System (SEMS). Title 19, Division 2, Chapter 1 of the California Code of Regulations (CCR, §§ 2400-2540) defines SEMS, including its purpose, scope, structure and applicability. SEMS is intended to standardize response to emergencies involving multiple jurisdictions or multiple agencies. Local government must use SEMS in order to be eligible for state funding of response-related personnel costs occurring in response to an emergency incident.

Solid Waste

The California Integrated Waste Management Board is responsible for achieving a 75 percent diversion of waste from landfills by 2020. The Integrated Waste Management Board works directly with local agencies and businesses to reduce waste at the source, and encourage recycling. For over 25 years, it has been a goal of the State of California to reduce the amount of material that is landfilled. The primary motive behind this goal was to relieve a landfill capacity "crisis." Earlier State mandates required local agencies to divert 25 percent of waste from landfills by 1995 and 50 percent by the year 2000; this

mandate was revised in 2011 and increased the mandate to the current 75 percent diversion level. Failure to meet these goals exposes local governments to possible fines.

Schools

Section 66995(d) of the California Government Code indicates that no facility that is owned and occupied by one or more agencies of federal, state, or local government shall be required to pay development fees to educational districts.

Local Policy Setting

Alameda County

Solid Waste Management

In 1990, Alameda County voters passed Measure D that set long-term goals for reduced landfilling, placing the main emphasis on preserving natural resources. Measure D identified the need to establish "sustainable consumption and disposal patterns." The Waste Reduction and Recycling Act of 1990 (Measure D), a charter amendment passed by the voters of Alameda County, established the Alameda County Source Reduction and Recycling Board and the policy goal of reducing the total tonnage of landfilled materials generated in Alameda County by 75% by a date to be chosen by the Recycling Board and to thereafter establish a date (or dates) to reduce, recycle, and compost further quantities of discarded materials. In 2003, the Recycling Board and Authority approved 2010 as the date by which 75% diversion was to be obtained. In July 2010 the Recycling Board and Authority approved a year 2020 objective to reduce the amount of readily recyclable and compostable materials originating in Alameda County and deposited in landfills to no more than 10% of total materials originating in Alameda County and landfilled. In 2012, Alameda County adopted Ordinance 2012-1 which set forth actions to reduce landfilling of recyclable and organic solid wastes from businesses, multi-family residences and self-haulers.

Fire Safety

The State Fire Marshal and County Fire Marshal conduct preconstruction review and approval for all new construction. Upon completion of construction projects, the Alameda County Fire Department conducts fire safety certification as well as future fire safety inspections. Prior to issuance of building permits, the Fire Prevention Bureau inspects all building plans to ensure that the plans comply with all applicable fire codes and regulations. Additionally, fire prevention inspectors conduct periodic inspections of facilities to ensure those business operations are conducted in a safe manner and are consistent with the conditions of approval.

General Public Services Policy

The *Castro Valley Plan* (Alameda County 2012) includes the following policies related to public services that are relevant to the Project:

PARKS AND RECREATION GOAL

GOAL 8.2-1 *Provide and maintain, in coordination with other public agencies, a system of local public park and recreation facilities offering a variety of*

active, passive, and cultural recreational opportunities that is adequate to meet the diverse recreational needs of community residents and visitors. Also consider the additional demands of those who work in the community but are not residents.

ADEQUATE PUBLIC SERVICES GOAL

GOAL 9.1-1 *Provide public services and utilities that are designed, located, and sized to serve existing and future development.*

ADEQUATE PUBLIC SERVICES POLICIES

Policy 9.1-1 Basic Public Services

All development within the Castro Valley urban area shall be provided with adequate basic urban services and facilities.

FIRE AND POLICE SERVICES GOAL

GOAL 9.2-1 *Provide and maintain a safe environment for Castro Valley residents, workers, visitors and property owners.*

FIRE AND POLICE SERVICES POLICIES

Policy 9.2-1 Comparable Public Safety Standards

Adopt and maintain public safety service standards that meet or exceed standards for comparable incorporated cities in Alameda County and surrounding counties.

Policy 9.2-2 Community-Oriented Policing

Promote a community-oriented approach to law enforcement

ENVIRONMENTAL CONSEQUENCES AND MITIGATION MEASURES

Significance Criteria

According to CEQA Guidelines, a project would have a significant environmental effect if it would:

- result in substantial adverse physical impacts associated with the provision of new or physically altered governmental facilities, need for new or physically altered governmental facilities, the construction of which could cause significant environmental impacts, in order to maintain acceptable service ratios, response times or other performance objectives for any of the public services.

In addition, the CEQA Guidelines indicate that a project would have a significant environmental effect if it would:

- result in an increase in the use of existing neighborhood and regional parks or other recreational facilities such that substantial physical deterioration of the facilities would occur or be accelerated; or

- include recreational facilities or require the construction or expansion of recreational facilities that could have significant physical effects on the environment.

Impacts and Mitigation Measures

IMPACT 13.1: Indirect Effects on Public Services

LESS THAN SIGNIFICANT IMPACT. While designed for a maximum occupancy of 105 males, the Camp Sweeney facilities currently operate within an occupancy limit of 50 males. This limit was imposed, in part, because of the deteriorated conditions of the existing site and buildings. The proposed Replacement Project is designed to have a capacity of 120 youth, an increase of 70, which would require an increase in Probation Department and other staff. Further, Probation Department policies and guidelines would require staffing ratios to increase at the new Camp Sweeney from current level of 1 staff to 10 youth to 1 staff to 8 youth. Thus, current staffing levels of approximately 5 (at a ratio of 1:10) would increase to 15 (at a ratio of 1:8). While the increased staffing required for the Project could be provided mostly by existing Probation Department personnel, it is presumed that some increase in employment could occur as a result of the Project.

Future employees at Camp Sweeney may choose to move near the facilities in order to be closer to their place of employment. Any new residents would increase demands on public services within the local community, but not to an extent that would be significantly greater than the general background growth that would otherwise be anticipated. Such employees would not be anticipated to have any greater impact on public services than employees of other area businesses who move to the area to be closer to work. These indirect effects on public services are therefore considered to be less than significant effects and no mitigation measures are warranted beyond the normal payment of fees for services and development impact fees for new residential development already occurring in the community.

IMPACT 13.2: Need for Additional Facilities to Provide Adequate Fire Protection Services, Emergency Medical Response Services and Hazardous Materials Response Services

The State Fire Marshall is the Authority Having Jurisdiction (AHJ) for the overall project. Prior to construction, the State Fire Marshall checks construction plans to ensure they are consistent with State requirements. The State Fire Marshall is also responsible for conducting fire safety inspections for the construction of any new juvenile detention facility. After construction, fire safety at Camp Sweeney would become the responsibility of the County Fire Marshall and the Alameda County Fire Department.

LESS THAN SIGNIFICANT IMPACT. Construction and operation of a new Camp Sweeney at the proposed relocation site would increase demand for fire protection services, emergency medical response services and hazardous materials response services. Although the Project would increase demand for services, construction and operation of the proposed new facilities would not result in a loss of acceptable response times or other ACFD performance objectives from existing fire protection stations, nor would it result in significant adverse physical or environmental impacts.

IMPACT 13.3: Need for Additional Facilities to Provide Adequate Police Services

LESS THAN SIGNIFICANT IMPACT. Construction of the proposed Camp Sweeney Replacement Project would create a slight increase in demand for police services to be provided by the Alameda County Sheriff Department in the vicinity. The new facility would be larger than the existing Camp Sweeney with

approximately twice the capacity compared with existing occupancy levels. However, no mitigation measures would be required since the facility would not significantly reduce the Alameda County Sheriff Department's performance objectives, nor result in significant adverse physical or environmental impacts.

IMPACT 13.4: Need for Additional Facilities to Provide Adequate School Services

LESS THAN SIGNIFICANT IMPACT. While in residence at Camp Sweeney, youth attend classes on site, with educational services being provided by the Alameda County Department of Education. Thus, local public school facilities would not be affected by the number of residents at Camp Sweeney at any particular point in time.

Capacity expansion, as proposed, could result in a slight increase in employment at the site, which could lead to some increase in the number of local families with school-age children if the new employees are drawn from outside of the area. This growth would not place a significant burden on the San Lorenzo or San Leandro USDs, because the number of new families would be small in comparison to the existing enrollment or capacity of the school districts, and because the employees would either occupy existing residences and thereby merely replace existing families, or would occupy new residences that are subject to impact fees that compensate for the introduction of new students in the affected district.

IMPACT 13.5: Need for Additional Facilities to Provide Adequate Parks and Recreation Services

LESS THAN SIGNIFICANT IMPACT. Local public parks and recreation services are not required for residents of a juvenile detention facility. The proposed Camp Sweeney Replacement Project would include extensive recreation facilities on site, including a new gymnasium, outdoor basketball courts and full athletic fields for soccer, baseball and other sports. Thus the replacement of Camp Sweeney as proposed would not increase demands on local parks or recreation services. Camp Sweeney employees who would use parks or recreation facilities during lunch hour or before or after work would not place a significant burden on local parks or recreation facilities.

IMPACT 13.6: Need for Additional Facilities to Provide Adequate Solid Waste Services

The day-to-day operations of a County institution such as Camp Sweeney may facilitate participation in local recycling programs, as solid waste disposal practices within such a facility can be controlled to a greater extent that would generally be possible in most non-institutional settings. For those alternatives where demolition would be required, there would be an opportunity to recycle demolition debris.

Construction

POTENTIALLY SIGNIFICANT AND MITIGABLE IMPACT. Construction of a new Camp Sweeney Facilities would result in demolition of the existing Camp Sweeney structures; demolition debris would include wood, metal, concrete, asphalt, and asbestos and would constitute a substantial one-time need for disposal. As the Project is required to meet the County's Waste Management plan during construction, it is not likely that the disposal of these materials would threaten landfill capacity.

> **Mitigation Measure Public Services – 13.6a: Demolition Debris Recycling.** Demolition of the existing Camp Sweeney buildings and facilities should include a plan to capture as much material

as feasible and recycle it for other uses. Concrete and asphalt should be reused as part of the construction of building slabs or parking lots at the new facility. Asbestos disposal and other Class I or II hazardous wastes would be disposed of in accordance with Bay Area Air Quality District and Department of Toxic Substance Control requirements, as appropriate.

Resulting Level of Significance: With implementation of **Mitigation Measure Public Services – 13.6a**, the volume of waste generated by demolition of the existing Camp Sweeney buildings and facilities would be substantially reduced and the impact reduced to a less than significant level.

Operations

POTENTIALLY SIGNIFICANT AND MITIGABLE IMPACT. The Castro Valley Sanitary District serving this site currently disposes of solid waste at the Altamont Landfill. In August 2005, the landfill had a remaining capacity of 45,720,000 cubic yards.[5]

The Project would include the replacement of Camp Sweeney, an increase in the number of youth the Camp could accommodate, and an attendant small increase in staff to serve the additional youth. Construction and operation of the proposed Camp Sweeney Replacement Project would marginally increase generation of solid waste needing collection and disposal by the Sanitary District. It is not likely that this marginal increase in volume of solid waste would threaten landfill capacity, but it could conflict with the County's waste diversion goals.

Mitigation Measure Public Services – 13.6b: Waste Reduction and Diversion. The Alameda County Probation Department, in cooperation with the County's GSA, should prepare a plan that demonstrates good faith efforts at diverting at least 50 percent of the solid waste generated by the new facility from landfill disposal via waste reduction and recycling.

Resulting Level of Significance: The source reduction and recycling efforts identified in **Mitigation Measure Public Services – 13.6b** are consistent with state law and County permitting requirements for diverting countywide projected waste stream. If this goal is achieved by the Project it would effectively mitigate the Project's contribution to the cumulative need for additional solid waste disposal facilities to a level of less than significant and less than cumulatively considerable.

IMPACT 13.7: Need for Additional Facilities to Provide Adequate Library Services

LESS THAN SIGNIFICANT IMPACT. Residents of Camp Sweeney do not have access to the area's public libraries, as library services to Camp Sweeney are provided through the Alameda County Library Extension Program. Current and future employees at Camp Sweeney would be expected to place a less than significant demand on library services. Therefore, construction of the Camp Sweeney Replacement Project would not result in a failure to achieve performance objectives by the area's libraries and no mitigation measures are needed.

[5] CalRecycle Solid Waste Information System. Website accessed at: http://www.calrecycle.ca.gov/SWFacilities/Directory/01-AA-0009/Detail/

14

UTILITIES

Public utilities discussed in this chapter include water; sewer; storm drainage; and gas, electrical, and telecommunications service. Significance thresholds for utility systems would be reached if the Project would result in an increased demand for utility capacities that cannot be met by existing or planned utility infrastructure.

ENVIRONMENTAL SETTING

Domestic Water Supply

Water Supply

Water service to the existing Camp Sweeney and the surrounding City of San Leandro is provided by the EBMUD, a public utility. EBMUD is responsible for service connections and water delivery to most of Alameda County and much of Contra Costa County.

The City of San Leandro and EBMUD have undertaken programs to conserve water and reduce the need for developing new water supplies. These programs include public education and information, economic and financial incentives and a variety of BMPs such as water saving plumbing fixtures and drought tolerant landscaping. Using reclaimed water in lieu of potable water for irrigation, particularly at local golf courses, is an important part of the conservation program.

Water Distribution System

EBMUD distributes its water through a system of pipelines, storage reservoirs and pumping plants separated into pressure zones. The two pressure zones located in San Leandro include the Central and Bayfair Zones. The Project site is located within EBMUD's Bayfair Pressure Zone. There are no major water storage facilities in San Leandro; instead the City is served by nearby storage facilities in Castro Valley and Oakland. EBMUD operates and maintains all water distribution lines within its service area and is responsible for all facilities up to the location of the water meter. EBMUD reports no known deficiencies in the system within the vicinity of the Project site.

Water distribution system currently serving the site consists of a 6-inch water line from the small EBMUD storage tank northeast of the site, across Fairmont Drive.

Wastewater Collection, Treatment and Disposal

Collection

The Oro Loma Sanitary District (OLSD) provides sanitary sewer service for the existing Camp Sweeney. The OLSD was formed in 1911 and today provides wastewater collection and treatment services for

44,000 customers within its 13–square-mile service area. The OLSD system includes 280 miles of sewer pipeline and 15 lift stations.

The existing sanitary sewer service to this site consists of a 10-inch sanitary sewer line from the west, crossing under Fairmont Drive, and then tapering into a 4-inch line serving the existing facility.

Wastewater Treatment and Disposal

The OLSD owns and operates a wastewater treatment plant with an average dry weather design capacity of 20 million gallons per day. The plant currently treats about 15 million gallons of sewage per day, including flow from the Castro Valley Sanitary District. Treated effluent is disposed to the deep waters of San Francisco Bay through the collectively owned East Bay Dischargers Authority pipeline. The treatment plant also produces about 14 tons of biosolids per day, which are processed for reuse. The OLSD has a Renewal and Replacement Program that covers ongoing repair and replacement of system components. Revenues for this program are generated through sewer connection fees and user fees.

Storm Drainage

The existing Camp Sweeney is located with the unincorporated Castro Valley Planning Area. Castro Valley is within Zone 7 of the Alameda County Flood Control and Water Conservation District. The District is responsible for designing all flood control and storm drainage facilities to meet 15-year flood standards. A complete system of storm drainage lines has been constructed throughout the Castro Valley Planning Area to accommodate storm runoff, with adequate capacity to accommodate ultimate development.

The existing storm drainage system at the site consists of small channels that drain to a large wetland area adjacent to Fairmont Drive. A storm drainage system in Fairmont Drive also discharges into this wetland area. At the lower end of the wetland a 60-inch storm drainpipe that currently lies 15 – 20 feet beneath the Project site (and that will remain in place as part of the Project) conveys runoff downstream into the Zone 7 system, eventually draining into the Bay.

Electricity, Gas, and Telecommunications

Pacific Gas and Electric Company provides electrical service to the site from a point adjacent to Fairmont Drive near the North Access Road. An existing 3-inch gas main also serves the site, coming from the west under Fairmont Drive. There is an existing large capacity utility trench in Fairmont Drive that is expected to be capable of handling most added services the Project would require. A wide variety of telecommunications services operate within the City of San Leandro.

REGULATORY SETTING

Federal

Clean Water Act and Safe Drinking Water Act

The Safe Drinking Water Act (42 United States Code [USC] §§ 300f *et seq.*) is the primary federal law regulating drinking water quality; it establishes standards intended to protect public health, safety and welfare. The U.S. EPA implements the Safe Drinking Water Act, which delegates its authority under the Act to the states.

The Clean Water Act (33 USC §§ 1251 *et seq.*) is intended to restore and maintain the integrity of the nation's waters, including requirements for states to establish water quality standards to protect designated uses for all waters of the nation. Many aspects of the Clean Water Act have been delegated to the states, including the regulation of discharges from private industry and public facilities such as wastewater treatment plants.

State

Water Supply

The California Urban Water Management Planning Act[1] requires that an understanding of urban water demands and efficient use of water be actively pursued by water suppliers, including the requirement for every urban water supplier to prepare and adopt an urban water management plan. Each urban water management plan must describe the suppliers' services area; identify and quantify existing and planned water sources; describe the reliability of water supplies; describe opportunities for exchanges or transfers of water; quantify past, current and projected water use; and describe and evaluate the supplier's water demand management measures. These plans are updated every five years.

CEQA also requires that projects of a certain magnitude provide an assessment of water supply. These requirements include an identification of any existing water supply entitlements, water rights or water service contracts, and a description of the quantities of water received in prior years by the public water system.

The Recycled Water in Landscaping Act requires municipalities to adopt ordinances requiring use of recycled water for landscaping uses where recycled water of appropriate quality is made available.

The Department of Health Services regulates drinking water, implements the Safe Drinking Water Act and oversees public water systems in California. The state requires that public water systems meet two groups of water quality standards: primary and secondary drinking water standards. Primary drinking water standards, known as Maximum Contaminant Levels, are legally enforceable standards that regulate contaminants that could threaten public health. Secondary drinking water standards are used to regulate contaminants that affect the taste, odor and appearance of water, and are enforceable for new potable water sources.

The San Francisco RWQCB has established water quality objectives to define the level of water quality to be maintained for designated beneficial uses. Water designated for uses as domestic or municipal supply shall not contain concentrations of constituents in excess of the limits specified in Title 22 of the CCR.

Telecommunications and Power

The California Public Utilities Commission regulates privately owned telecommunications, electric, natural gas, water, railroad, rail transit, and passenger transportation companies.

[1] Division 6, Part 2.6 of the California Water Code.

Local

Municipal Regional Stormwater NPDES Permit/C.3 Requirement

The San Francisco Bay RWQCB also has issued a Municipal Regional Stormwater NPDES Permit (Permit Number CAS612008). In an effort to standardize stormwater management requirements throughout the region, this permit replaces the formerly separate countywide municipal stormwater permits with a regional permit for 77 Bay Area municipalities. Under provisions of the NPDES Municipal Permit, projects that disturb more than 10,000 square feet are required to design and construct stormwater treatment controls to treat post-construction stormwater runoff. Amendments to the MRP require all of the post-construction runoff to be treated by using low impact development treatment controls, such as biotreatment facilities.

Alameda County

Public Infrastructure

The Castro Valley General Plan (2012) includes the following goal and policies related to infrastructure services that are relevant to the Project site:

GOAL 9.1-1 *Provide public services and utilities that are designed, located, and sized to serve existing and future development.*

Policy 9.1-1 ***Basic Public Services****. All development within the Castro Valley urban area shall be provided with adequate basic urban services and facilities.*

Climate Change

GOAL 12.2-1 *Reduce greenhouse gas emissions in Castro Valley.*

GOAL 12.2-2 *Prepare Castro Valley for the effects of climate change through the adoption of adaptation and resiliency strategies.*

Policy 12.2-2 ***County Climate Action Plan****. The County's Climate Action Plan shall be the guiding document for the reduction of greenhouse gases in Castro Valley and shall be implemented through all components of the County General Plan including the Castro General Plan.*

Policy 12.2-3 ***Renewable Energy****. Decrease dependency on nonrenewable fuel by increasing availability and use of renewable energy sources.*

Policy 12.2-4 ***Energy Efficiency****. Encourage improvement to the energy efficiency of new and remodeled buildings in Castro Valley.*

ENVIRONMENTAL CONSEQUENCES AND MITIGATION MEASURES

Significance Criteria

Water Supply

Under CEQA Guidelines, a project would have a significant environmental impact if it were to:

- Have insufficient water supplies available to serve the project from existing entitlements and resources, or require new or expanded entitlements.
- Require or result in the construction of new water treatment facilities or expansion of existing facilities, the construction of which could cause significant environmental effects.

Wastewater Collection, Treatment and Disposal

- Exceed wastewater treatment requirements of the applicable RWQCB.
- Require or result in the construction of new wastewater treatment facilities of expansion of existing facilities, the construction of which could cause significant environmental effects.
- Result in a determination by the wastewater treatment provider that serves or may serve the project that it has inadequate capacity to serve the project's projected demand in addition to the provider's existing commitments.

Storm Drainage

Under CEQA Guidelines, a project would have a significant environmental impact if it were to:

- require or result in the construction of new storm water drainage facilities of expansion of existing facilities, the construction of which could cause significant environmental effects.

Electricity, Gas and Telecommunications

Although there are no specific thresholds of significance presented for gas, electric or telecommunications service in the CEQA Guidelines, for the purposes of this evaluation a project would have a significant environmental impact if it were to:

- require or result in the construction of new electric, gas or telecommunications transmission facilities or expansion of existing facilities, the construction of which could cause significant environmental effects.

Impacts and Mitigation Measures

IMPACT 14.1: Availability of Water Supplies to Serve the Project from Existing Entitlements and Resources

PROJECT BENEFITS/MITIGATION MEASURES INCORPORATED

LESS THAN SIGNFICANT IMPACT. The Project would include the replacement of Camp Sweeney, an increase in the number of youth the Camp could accommodate, and an attendant small increase in staff to serve the additional youth. Construction and operation of the Camp Sweeney Replacement Project would increase demand for water supply from EBMUD above the current usage level. Daily domestic

water demand, based on an average of 50 gallons per day per person,[2] and an average daily occupancy of 150 persons per day (including 120 resident youth, 20 staff and 10 visitors) is estimated at 7,000 gpd and a peak of 10,000 gpd. Water for fire suppression requires the capability of delivering 3,000 gpm. The amount of irrigation water needed has not been estimated but would not be significant because the athletic fields would not be irrigated and the landscaping around the new campus buildings will be drought tolerant species requiring very little irrigation. Overall, the increase in water usage from construction and operation of the proposed Camp Sweeney Replacement Project would be marginal.

EBMUD has demonstrated that this additional demand is less than significant and can be met given the respective agency's water conservation measures. The infrastructure required to implement these water conservation measures would be a required improvement for any new facility constructed and would be part of the overall Project costs. Given that EBMUD has indicated that with aggressive conservation and reclamation it can meet its obligation to serve its current and future customers in normal rainfall years, this alternative project's contribution toward the overall water demand is an insignificant component and the Project's impact on water supply is less than significant.

Need for Expanded Water Distribution Systems to Adequately Serve the Site

NO IMPACT. No expansion of EBMUD facilities would be needed to serve the Camp Sweeney Project. However, water distribution lines that currently serve the existing Camp would need to be relocated site to accommodate the new campus. A new extension from the existing water line in Fairmont Drive would need to be constructed to serve the new facility. Service to the new Camp Sweeney would not need to cross the known active fault at this site.

IMPACT 14.2: Need for Additional or Expanded Wastewater Treatment and or Disposal Facilities to Provide Adequate Service

LESS THAN SIGNFICANT IMPACT. Operation of a new Camp Sweeney with 120 bed capacity would marginally increase the demand for wastewater treatment and/or disposal.[3] This would be a less than significant impact. The OLSD currently has 5 million gpd of excess dry weather capacity. The proposed 120-bed facility would reduce the excess capacity of OLSD treatment plant by approximately 0.08 percent. This is a less than significant impact.

IMPACT 14.3: Need for Additional or Expanded Wastewater Collection Facilities to Provide Adequate Service

LESS THAN SIGNIFICANT IMPACT. The existing sanitary sewer line that currently serves Camp Sweeney and other facilities on the Fairmont Campus would need to be relocated to serve the proposed Project. New sewer connections to the relocated sewer line would exit from the site at the lower, southern end.

IMPACT 14.4: Need for Additional Facilities to Provide Adequate Storm Drainage Services

LESS THAN SIGNIFICANT IMPACT. Under existing conditions, the area of the Project site south of the North Access Road consists currently of a series of asphalt paved parking lots and internal circulation roadways; approximately 100 percent of this part of the site is impervious surface which results in

[2] Personal communication with Shannon Allison, Integral Group, Inc., January 21, 2016.

[3] Wastewater generation is estimated as 90 percent of the potable water demand (excluding the demand for exterior irrigation) as discussed in **Impact 14.1**.

almost no stormwater able to percolate into the ground. Stormwater sheet flows by gravity to storm drain catch basins on the site that feed into the storm drain trunk line in Fairmont Drive. The proposed Camp Sweeney campus would decrease the amount of impervious surface, allowing stormwater to percolate into the ground, thus lowering on-site surface runoff potential from existing conditions. In addition, stormwater collected in roof drains and from impervious surfaces would flow to a proposed stormwater detention and biofiltration facility located just north of the South Access Road; inflows that exceed its storage capacity would run out through laterals and join the main storm drain trunk line in Fairmont Drive. The athletic fields east of the main campus area would remain nearly 100 percent pervious surface. The overall design of the campus seeks to maximize natural percolation and biofiltration of stormwater and minimize outflows to the public stormwater system. In addition, the existing Camp Sweeney buildings and paved driveways, walkways and parking areas are proposed to be removed and the site restored to its approximate original natural condition in which 100 percent of that site would revert to pervious surfaces. These factors would ensure that the impervious surface areas created by the new Camp Sweeney buildings would not place a significant burden on the existing storm water drainage system. Impacts related to stormwater facilities and drainage services would be less than significant.

IMPACT 14.5: Increased Demand for Electrical, Gas and Telecommunication Services

LESS THAN SIGNIFICANT IMPACT. The Project would be designed to meet the Alameda County sustainable design goals for the Camp Sweeney Replacement. In addition to a requirement that the project achieve a minimum level of LEED Silver Certification, the County has set the goal of a Net-Zero energy project. The Project would not increase the amount of greenhouse gases in the atmosphere. The only exception to this is the natural gas used in the Food Services building for food preparation. Achieving Net-Zero would require the incorporation of a substantial area of solar photovoltaic panels as part of the Project.

Existing electrical service is available to serve the new facility, as is an existing gas line and none of the new or relocated services would need to cross the known active Hayward Fault. Impacts related to the provision of electrical, gas, and telecommunication services would be less than significant.

15

CULTURAL AND HISTORIC RESOURCES

ENVIRONMENTAL SETTING

Cultural resources represent the social, economic, physical and political history of an area. They play an important role in defining the unique characteristics of an area and build a bridge of understanding between the present and the past. A cultural resource may take one of several forms including: a structure such as a building or bridge; a group of buildings such as an historic commercial district or farm; a transportation corridor; a natural feature such as a grove of trees or a rock outcropping; a site on which an important structure once stood or an important event occurred; or a site containing important archaeological or paleontological artifacts. A structure or site may be a cultural resource because of its physical attributes or because of its connection with a person or event that is important to the history of the area. Some cultural resources reveal past ways of life that might otherwise be forgotten. Others serve as a reminder that some activities that occur today have a long and continuously evolving pattern of activity in the area.

This chapter discusses the potential impacts of the Project on the cultural resources of the Replacement Project site.

The chapter provides an overview of cultural resources of Alameda County, discusses the applicable laws and regulations governing cultural resource management, and provides a brief outline of the methods and sources used to assess the cultural resources that may exist on the Project site. This introductory information is followed by site-specific background information, which includes a brief description of the site's history and a summary of the cultural resources that are known to exist on it. Specific information regarding the existing Camp Sweeney buildings and its site and an evaluation of them as historic resources under CEQA criteria is presented based on an historic evaluation prepared by a qualified historic architect, Mark Hulbert, principal in the firm Preservation Architecture.[1] The final section discusses the impacts of the Project on cultural resources and proposes mitigations to reduce potentially significant impacts.

Overview of Cultural Resources in Alameda County

This discussion will focus on three periods in Alameda County history: Native American, Hispanic, and American. The discussion is based on material from Basin Research Associates (2001).

Native American Period

Alameda County was home to the Costanoan people, who occupied the central California coast as far east as the Diablo Range. The Costanoans occupied specific territories generally defined by physiographic features. Each territory normally supported approximately 200 individuals, although

[1] Preservation Architecture, *Camp Wilmont Sweeney, Alameda County, Historic Resource Evaluation*, August 12, 2015.

tribelets ranged in size from 50 to 500 people. The Costanoans followed a seasonal hunting and gathering round and moved from their respective permanent village to temporary camps at scattered locations in the tribelet's territory. They relied on a variety of structures—domed, thatched houses, sweathouses or *temescals*, dance houses[2] and storage structures.

Their technology included the bow and arrow and numerous woven items such as baskets, fish nets, mats, cradles, balsas (boats), traps and snares. They utilized natural fibers and materials including Tule, milkweed and strips of animal skins. Stone tools were fashioned from sedimentary and metamorphic rocks, including imported obsidian. Cinnabar and hematite were used as pigments. Bone, wood and shell were used for both utilitarian and decorative items.

The aboriginal way of life apparently disappeared by 1810 due to its disruption by Euro-American diseases, a declining birth rate and the impact of the mission system. For the most part, the former hunters and gatherers were transformed into agricultural laborers and worked with former neighboring groups such as the Esselen, Yokuts and Miwok. After secularization of the missions between 1834 and 1836, some Native Americans returned to traditional religious and subsistence practices while others labored on Mexican ranchos. Multiethnic Indian communities grew up in and around Costanoan territory and provided informant testimony to ethnologists from 1878 to 1933. Former mission neophytes formed multitribal Indian communities in Pleasanton and other locales.

The general alignment of Interstate I-580 conforms to the location of a major prehistoric trail linking the interior with the San Francisco Bay. The Costanoans are known to have supplied mussels, abalone shells, dried abalone meat and salt to the Yokuts and *Olivella* shells to the Sierra Miwok. In turn, as part of the aboriginal trade network, the Costanoans received piñon (pine) nuts.

Hispanic Period

Spanish explorers in the late 1760s and 1770s were the first Europeans to traverse the San Francisco Peninsula and interior areas. The first party, that of Gaspar de Portola and Father Juan Crespi, traveled up the coast in search of Monterey Bay, which they had failed to recognize from others' descriptions. In the fall of 1769, this party first sighted San Francisco Bay from a ridge on the Peninsula. The second Hispanic exploration party, that of Fernando Javier Rivera and Father Francisco Palou, reached the San Francisco Peninsula in late 1774. The same route was followed by Heceta in 1775.

After an initial period of exploration (1769–1821), the Spanish focused on the founding of presidios, missions and secular towns on the land held by the Crown whereas during the later Mexican period (1822–1848), individual land ownership became important. Mission San Francisco de Asis, known as Mission Dolores in present-day San Francisco, was established in 1776. It was the sixth mission established in California. Mission Santa Clara and Pueblo de San Jose[3] were founded in 1777. Mission San Jose, in the present-day City of Fremont, was established in 1797, the 14th of 21 missions established in California. Baptismal records indicate Mission San Jose had the greatest impact on the aboriginal population living in the Project area, followed by Mission San Francisco.

American Period

In the mid-19th century, most of the rancho and pueblo lands in California were subdivided as the result of population growth, the American takeover and the confirmation of property titles throughout

[2] Dance enclosures were circular or oval fence-like structures with a door and an opposing opening in the rear and were usually located in the village proper.

[3] One of the secular towns founded to administer and coordinate the missions and presidios of Alta California.

California. Prior to the confirmation of titles, the transfer of real estate was extremely risky. The initial explosion in population was associated with the Gold Rush (1848), followed later by the construction of the transcontinental railroad (which was begun in 1869 and completed in 1873). The agricultural land use pattern begun in the Hispanic Period and reinforced in the American Period continued through World War II. Rapid population growth after World War II created tremendous pressure to urbanize Alameda County, resulting in the loss of much of the County's most productive cropland. Rapid urban growth has occurred more recently.

City of San Leandro

Most of modern-day San Leandro was contained within the vast cattle ranches of Ignacio Peralta (north of San Leandro Creek) and Don Jose Joaquin Estudillo (south of San Leandro Creek). The ranches gave way to farms as settlers, squatters and “49ers” arrived in the early 1850s. The town of San Leandro was laid out in 1855 and became the seat of Alameda County in 1856. The original town plan established a grid of streets, with sites set aside for prominent buildings such as the County Courthouse and City Hall.

After a catastrophic earthquake destroyed the Courthouse in 1868 and the transcontinental railroad reached Oakland in 1869, the county seat was relocated from San Leandro to Oakland. However, San Leandro continued to prosper as a small agricultural town well into the 1940s.

The 1940s and 1950s were a time of transformation for San Leandro. A development boom, initially created by the need for wartime housing and then sustained by returning veterans and their families, brought a 350 percent increase in the City’s population in just 20 years. Much of San Leandro’s current form and character was defined during this era and nearly half the City’s current housing stock was added.

The City’s pace of growth slowed in the 1960s as the City reached its natural limits and development focused on in-fill sites within the City’s boundaries. By the 1980s, as the Bay Area’s economic base shifted from manufacturing to services and technology, many traditional industries left San Leandro. Families who moved to San Leandro in the 1940s and 1950s matured, and the City’s younger people moved out. The percentage of senior citizens in the City increased from 6 percent in 1960 to 20 percent in 1990, giving San Leandro the highest median age in Alameda County.

Methods

Qualified professionals prepared archaeological assessments for the proposed Project site and, as noted above, an historical and architectural assessment of the existing Camp Sweeney campus and its buildings was made because the structures are more than 50 years old, a factor that potentially qualifies them as historic resources.

Introduction to the Historic Evaluation

Camp Sweeney is a facility consisting of buildings and grounds, owned and operated by the County of Alameda, which houses and serves juvenile boys on disciplinary probation. Camp Sweeney consists of five original buildings, dating to 1957–1958, and a later building dating to the mid-1970s. The five older buildings and their associated property are the subject of the historic resource evaluation prepared for the Camp Sweeney Replacement Project. The 1976 building is not of an age to be evaluated. However, an additional and adjunct building, dating to 1953 and built as a part of a former Juvenile Hall complex that preceded and stood adjacent to Camp Sweeney, was included in the historic evaluation.

Summary History

The complex known as Camp Wilmont Sweeney was created in 1957–1958 by Alameda County for use as a reform-style juvenile detention campus for boys that originally consisted of five of the six extent buildings aligned northwest to southeast along an internal entry road and which dead-ends at the east end of the camp's buildings. Those five original buildings included a Superintendent's Residence, an Administration Building, a Dormitory, a Dining Hall and a Recreation Hall. All except the residence remain in use with limited physical or functional change. The residence is now used for storage. The Recreation Hall was the only two-story structure, and which housed classrooms in a lower level that is currently used for recreational purposes, including a workout room.

Prior to its construction, the subject property was operated by Alameda County as a farm for the raising of animals and crops to serve the County's hospitals – one of which, Fairmont Hospital, has long stood directly below and to the southwest of Camp Sweeney. In the early 1950s, the adjoining land directly to the northwest, which had also been a part of the county farm, was developed into a large, multi-building Juvenile Hall complex.

At the time of its construction, Camp Sweeney was originally named the Senior Boys Camp. Several other juvenile justice facilities were built subsequent to the Senior Boy's Camp, including Las Vistas (1959–1962), a probation camp for girls; and Chabot Ranch (1965), a camp for younger boys. In the 1970s, Camp Sweeney's original training program was mandated to give way to formal education. Thus, in 1976, a classroom building (Ishimaru, O'Neill & Simmons, architects) was added to the campus and, at that time, the camp was renamed Los Cerros Educational Facilities. In the late 1990s, the camp was again renamed, this time in honor of an Alameda County juvenile court judge, Wilmont Sweeney.

Camp Sweeney was created as a low security probation camp for the housing, treatment, training and schooling of male-juvenile offenders (then labeled "delinquents"). Evidence shows that, along with juvenile halls of justice, probation camps—rural and urban—have existed since the early 1900s in California. Statewide, juvenile reform schools date back to early statehood, and in 1890 the state formally opened two such schools, the Whittier State Reformatory in Los Angeles County and the Preston School of Industry in Amador County. In 1913, the Ventura School for Girls was opened and, in 1931, the state authorized counties to establish forestry camps for delinquent youth. By 1941, with the California Youth Correction Authority Act, a new era of corrections was underway.

Fed by fast-changing demographics along with changing concepts of juvenile delinquency, the development of juvenile reform facilities expanded in the World War II period and thereafter—with the wars end and the closing of military camps adding substantially to their demand. Currently, California counties operate some 67 probation camps and ranches, of which Sweeney is a "conventional model" camp—securely fenced, within which a grouping of buildings and yards serve the camp's administrative, housing, dining, training/educational and recreational functions. Sweeney is currently one of approximately 52 such conventional county-operated camps in California and the only one in Alameda County. A few other conventional camps within adjacent counties include Log Cabin Ranch, San Francisco, 1941; Fouts Springs Camp, Solano County, 1959; and James Boy's Ranch, Santa Clara, 1956; and the Orin Allen Youth Rehabilitation facility in Contra Costa County.

Descriptions

The Camp Sweeney site is part of a broad slope directly above I-580 in the hills of San Leandro. The Camp sites along a bench with the west-east road at its center and with buildings on each side, uphill (to the northeast) and downhill (to the southwest). The existing Camp Sweeney buildings and site are shown in **Figure 15.1**. Of the original five buildings, three are on the uphill side—the Administration,

Dormitory, and Dining Hall buildings—and the other two stand opposite on the downhill side, along with the later classroom building. The roadway thus forms a central spine to the campus, along which social and recreational spaces occur. The geographic center of the campus is formed by the two largest buildings—the Dormitory and Recreation Hall—standing directly opposite and facing one another across

Figure 15.1: Camp Sweeney - Historic Structures

an informal plaza that lies in between. Around and between the buildings on each side of the drive are landscaped spaces, along which the three north side buildings are linked by a concrete walkway. To the north of and behind the uphill buildings, the hills rise somewhat steeply and consist largely of trees, ground plantings and grasses. At the south side, behind the central Recreation Building, the site opens out to a large flat area with a set of ball fields. At the far (east) end of the campus, just past the Dining Hall and the Classroom Building, the road turns uphill, where there are miscellaneous structures that remain from the days when the camp husbanded animals and crops). Today, that former farm-like yard is now a service yard.

In late 2000, the former Juvenile Hall complex, including its 1970s additions and also including Chabot Ranch, were removed. After the new Juvenile Justice Center was built, the entry road into Camp Sweeney was altered, as was a ball field that existed along that entry road. Remnants of that road and ball field are in evidence today to the north of the entry road and below the massive retaining walls that support the new Juvenile Center site.

Today, though perhaps not originally, the Camp is surrounded by a high fence with security features. The present fence was added in 2007. Outside the Camp and directly to the east is a large and open hillside which is still partly in use for dry farming hay by the County Sheriff's Office. Downhill, to the

south, are several complexes of County owned buildings, including both Las Vistas and, further downhill, Fairmont Hospital. To the west and along the entry road is the new Juvenile Justice Center, uphill and to the north, and the Gymnasium Building and the empty site of the former Juvenile Hall to the south.

The 1957–1958 Camp Sweeney buildings are rudimentary and highly functional structures constructed of concrete block exterior walls and double-pitched, low-slope, overhanging roofs. The Administration, Dormitory, and former Residence buildings are long and low buildings, the central dorm exceedingly so. The Recreation Hall, though itself long on its uphill side, is the only two-story and thus vertical structure, at least at its sloping sides and rear. The Dining Hall is T-shaped.

Other typical building elements are metal windows, some with wood frames and some with concrete block sills (Dorm and Dining buildings), and most with plastered aprons. Several uniquely large windows are located in the gabled ends of the Dining and Recreation buildings. Doors are wood and wood framed. The deeply overhung roofs have internal gutters behind wide and canted wood fascia boards. Exterior building systems (lighting, power, fire protection) are exposed and utilitarian. Interior construction consists of concrete block walls; exposed pitched roof/ceiling structures, some with applied acoustic tiles and most with skylights; floors are concrete slabs with linoleum flooring; and exposed and utilitarian building system components (lighting, heating and ventilation, fire protection, etc.). Each building interior has its own particular functional arrangement: the Administration Building is subdivided into office areas in a double-loaded arrangement; the Dormitory is open with four sleeping quadrants, a central supervisorial station, and a central toilet and shower room cluster; the Dining Hall has a large open dining space and a cafeteria style kitchen in the back wing; and the main level of the Recreation Building is open yet with a built-in platform area that serves as a stage.

The site partly functioned as a farm, with crops and animals. Those functions have been reduced over the years, but the gardening component is still partly extant.

As noted, the Gymnasium building today stands alone in the eastern corner of the large open parcel along the south side of the entry road into the Camp Sweeney property, yet outside the Camp's gates and fencing, the gym provides a set of indoor ball courts (basketball, volleyball, etc.) and other gym functions (e.g., boxing room) that are not available in the recreation building on-site.

The Gymnasium is a poured-in-place concrete building with a high-gabled roof over the gym space, the span of which is steel framed with a wood frame roof assembly atop. Adjunct space is housed in lower appendages at the building's west end, which are flat-roofed. Those appendages include small vestibules that were once part of enclosed walkways to the former adjoining buildings. Windows are steel, and many of the operable units have security screens. Doors are also steel. The interior court space has a wood gym floor striped for many different court configurations. The low, north spaces, one of which houses a boxing ring, are subdivided from the gym by wood and glazed partitions. Lighting and building system equipment is exposed and utilitarian.

Evaluations

As previously evaluated, the former Alameda County Juvenile Hall was identified to have been one of the most ambitious juvenile detention projects in California in the post-1940 period, and was thus an important representation of that period of California history. That evaluation was specific to the Juvenile Hall complex. Though acknowledging that the Senior Boys and Las Vistas camps were "major additions" to the Juvenile Hall complex, no evaluation was then undertaken to identify if either camp had potential significance on the basis of their association to the former Juvenile Hall. In the meantime, the former Juvenile Hall complex was removed leaving only the Gymnasium standing (along with an adjunct structure). Evidently, the historical relationship between that building, the Gymnasium, and its former

complex has been severed. Today, it is a freestanding structure with a part-time gym function and which no longer serves the Juvenile Hall. Like the Gym, whatever relationship the Senior Boys and Las Vistas camps had with Juvenile Hall, whether historically important or not, is moot, as their association to the historic Juvenile Hall has also been severed and lost.

Consequently, Camp Sweeney is a stand-alone probation campus for boys, and must be evaluated on that basis and in that context. Towards that end, the following applies the four California Register of Historic Resources (California Register) criteria to determine if Camp Sweeney and/or the Gymnasium building are California Register eligible and thus, whether or not they are individually and/or collectively historic resources for the purposes of CEQA.

As noted above, to be eligible for listing on the California Register, a resource must be historically significant at the local, state, or national level, under one or more of the following four criteria:

1. *It is associated with events that have made a significant contribution to the broad patterns of local or regional history, or the cultural heritage of California or the United States.*

Probation camps and ranches were a part of state (and national) culture throughout the 1900s. The 1950s did not invent or reinvent the use. That use is basic: to administer, house, feed, teach and recreate juvenile offenders in an isolated or semi-isolated setting with varying degrees of security.

2. *It is associated with the lives of persons important to local, California, or national history.*

As was previously found with respect to the former Alameda County Juvenile Hall, Camp Sweeney is not identifiably, directly associated with historically significant persons. Therefore Camp Sweeney and the Gymnasium building do not meet California Register Criterion 2.

3. *It embodies the distinctive characteristics of a type, period, region, or method or construction, or represents the work of a master, or possesses high artistic values.*

Camp Sweeney

The extant camp was constructed for a rudimentary set of uses: administration in the form of a small office building, housing in the form of a minimum security dormitory, a dining hall, a recreation building that incorporated classrooms, and a superintendent's residence. The resulting institutional structures were and are highly functional, and their construction is also highly durable.

There was no invention or unique exploration of forms or functions. While the Sweeney and Las Vistas campuses may be considered additions to the 1953 Juvenile Hall complex, those three complexes stood and, to the extent they remain, still stand independent of each other formally, physically and functionally. Though the architect of the original Camp buildings, Chester H. Treichel, designed both of the camps, there is no apparent planning or any architectural relationship between them, so they do not form a whole greater or more meaningful than the two individual parts. That the former Juvenile Hall complex has been largely obliterated without essentially altering the character of either of the two camps is direct proof of the disassociation of the individual campuses.

Moreover, that the primary facility has been largely demolished prohibits any overall comprehension of these adjacent building complexes. The Camp Sweeney property and buildings embody rudimentary and basic institutional planning and design:

- The site is designed around a central roadway that links the linear complex. The character of the road, social and recreational spaces, and on-site circulation are functional: asphalt paved roadway and parking at each side, concrete paths and stairs with pipe railings, telephone poles, and trees along with low landscaping along the roadway, a flagpole on the bank in front of the Dormitory,

and grassy areas with some mature trees around the buildings. While some relatively natural areas remain, especially the hill above, the site design is without noteworthy character or features. In fact, aside from the hard surfaced and semi-natural areas, most of the site features are probably of more recent age, including the surrounding fences. Another particular example is the oak tree patio at the classroom, which is a quality and good looking outdoor area, yet which is associated with the 1976 building. Finally, there is no identifiable landscape architect or designer.

- The building designs are likewise highly functional. While their simplified forms and materials are clearly modern, the building style is utilitarian, rather than Modernistic, and to the extent that they are dutiful late-postwar institutional building design rather than ~~as~~inspired architecture.

Thus, the Camp Sweeney property and buildings do not embody any identifiably historic or distinctive uses, design or architecture. Moreover, based on the summary of his known career, Treichel has no potential to be identified as an architect of historic importance. Therefore, Camp Sweeney does not meet California Register Criterion 3.

Gymnasium

This building was previously evaluated as a part of the previous Alameda County Juvenile Hall complex (1953, Kent & Hass, architects) that, until circa 2008, included four interconnected buildings plus additions to the complex made in 1972. Three of those 1953 buildings were removed leaving only the gymnasium building with its remnant linkages to the previous structures.

In 2002, the 1953 juvenile hall complex was identified as eligible for the California Register and potentially eligible for the National Register (Minor and Basin Associates 2002) on the basis of its being:

- One of the most ambitious juvenile detentions projects in California in the decade following World War II;
- A major example of institutional work by the architectural firm Kent & Hass;
- A functional, modernist and prison-like design conveying the essence of juvenile-hall design in California in the post-war decade, and the culture's pre-occupation with crime and repressiveness during the Cold War era.

Each of these bases for historical and architectural significance is, in turn, based on the former Juvenile Hall complex, which consisted of four original parts: an administration building; a Boy's Unit; a Girl's Unit; and the Gymnasium (plus the adjunct Snedigar Cottage). The four main buildings formed a cluster that was interconnected by securely enclosed passageways. The complex formed a functional whole. Even after expansion in 1972, the 1953 grouping remained whole, and its integrity intact.

As the gym building stands today, it is a surviving remnant of the historic Juvenile Hall complex. Yet, without the associated buildings that it once belonged to, the Juvenile Hall entity is incomprehensible. Today, this is a freestanding gym building without former associations. And while vestiges of its two former passageways remain, those too are insensible without the adjoining complex of functionally and architecturally associated buildings. The Gymnasium also stands separate from the adjoining camps Sweeney and Las Vistas, without any visible or functional relationship (yet understanding that it is used by Camp Sweeney for sporting events, and which in actuality allows the Camp Sweeney boys to leave the campus without authorization).

The architecture of the Gymnasium is without individual or independent distinction. It is a large, gable-roofed building housing ball courts in its high volume space and adjunct gym uses and spaces in a lower wing. It is of concrete wall construction with a steel and wood framed roof, a range of industrial steel windows, most with security grilles, and steel doors.

The architects of the Gymnasium, Kent & Hass—Andrew T. Hass, principal—did not play an important role in the architecture of the San Francisco Bay Area, and are not potentially identifiable as masters.

As Camp Sweeney and the Gymnasium building do not embody distinctive characteristics or methodologies, or represent the work of a master, or possess artistic value, these built resources do not meet California Register Criterion 3 (nor do they meet National Register of Historic Places Criterion C).

4. *It has yielded, or has the potential to yield, information important to the prehistory or history of the local area, California, or the nation.*

The Camp Sweeney and former Juvenile Hall property are not known to have yielded important historical or prehistorical information, nor do the subjects of this evaluation—a range of twentieth century-built resources—appear to have any potential to yield any important information in the future. Thus, neither Camp Sweeney nor the Gymnasium building meets California Register Criterion 4.

In summary, since Camp Sweeney and the Gymnasium building do not meet any California Register criterion of significance, these resources are not eligible for the California Register.

Summary of Known Cultural Resources

There are no known prehistoric or archaeological resources on this site (LSA 2000).

The project location places it in an area of moderate archaeological sensitivity (Archaeology in Alameda County: A Handbook for Planners 1976) third highest on a four part scale that ranges from minimal and moderate to high and extreme. For the level of sensitivity noted, it is unlikely that excavation work performed on the site might unearth important archaeological or historical remains that were previously undiscovered. However, it is appropriate to include measures for the applicant to undertake in the event of the uncovering of resources.

Native American Resources

The southwestern portion of the study area, which was identified as an area of sensitivity for prehistoric resources, was thoroughly surveyed and no resources were observed.

Unique Geological and Paleontological Features

There are no unique geological or paleontological resources located at the Project site.

Human *Remains*

There are no unique geological or paleontological resources located at the Project site.

REGULATORY SETTING

This section is consistent with both federal and state regulatory requirements for cultural resources pursuant to Sections 106 and 110 of the National Historic Preservation Act (NHPA) of 1966 (as amended), its implementing regulations (36 Code of Federal Regulations [CFR] Part 800) and the CEQA. Cultural resources include prehistoric and historic archaeological sites, districts and objects; standing historic structures, buildings, districts and objects; and locations of important historic events or sites of traditional/cultural importance to various groups.

Federal

National Historic Preservation Act

The NHPA of 1966 (as amended) established the federal government's policy on historic preservation and the programs, including the National Register of Historic Places (NRHP), through which that policy is implemented. Under the NHPA, historic properties include "any prehistoric or historic district, site, building, structure, or object included in, or eligible for inclusion in" the NRHP (16 USC Section 470w (5)). For listing on the NRHP, an historical resource must be significant at the local, state or national level, under one of four criteria. A quality of significance in American history, architecture, archaeology, engineering and culture is present in districts, sites, buildings, structures and objects that possess integrity of location, design, setting, materials, workmanship, feeling and association, and:

A. that are associated with events that have made a significant contribution to the broad patterns of our history; or

B. that are associated with the lives or persons significant in our past; or

C. that embody the distinctive characteristics of a type, period or method of construction, or that represent the work of a master, or that possess high artistic values, or that represent a significant and distinguishable entity whose components may lack individual distinction; or

D. that may have yielded, or may be likely to yield, information important in prehistory or history.

The NHPA of 1966 (as amended) and its implementing regulations (16 USC Section 470 et seq., 36 CFR Part 800, 36 CFR Part 60 and 36 CFR Part 63) require the Lead Agency to consider the effect of a proposed project on historic properties. NHPA also requires that the Lead Agency provide the Advisory Council on Historic Preservation and the State Historic Preservation Officer with a reasonable opportunity to comment on any undertaking that could adversely affect cultural properties listed or eligible for listing on the NRHP.

If a Clean Water Act Section 404 permit is required for construction (wetland fills or crossings), the NHPA of 1966 (as amended) and its implementing regulations (16 USC Section 470 et seq., 36 CFR Part 800, 36 CFR Part 60, and 36 CFR Part 63) also apply. The U.S. Army Corps of Engineers (USACE), as lead federal agency for issuing the Clean Water Act Section 404 permit, would be the Lead Agency for NHPA Section 106 compliance. Consultation with the Advisory Council on Historic Preservation and the State Historic Preservation Officer would be required.

State

Historic Resources

CEQA equates a substantial adverse change in the significance of a historic resource with a significant effect on the environment (Section 21084.1 of the Public Resources Code). It defines a substantial adverse change as any proposed demolition, destruction, relocation or alteration that would impair a resource's historic significance (Section 5020.1). Section 21084.1 stipulates that any resource listed in, or eligible for listing in, the California Register is presumed to be historically or culturally significant.

The criteria for listing on the California Register are very similar to listing on the NRHP. The historic resource may be listed in the California Register if it meets one or more of the following criteria:

(1) It is associated with events that have made a significant contribution to the broad patterns of local or regional history, or the cultural heritage of California or the United States;

(2) It is associated with the lives of persons important to local, California or national history;

(3) It embodies the distinctive characteristics of a type, period, region or method of construction, or represents the work of a master or possesses high artistic values; or

(4) It has yielded or has the potential to yield information important in the prehistory or history of the local area, California or the nation.

Resources listed in a local historic register or deemed significant in an historic resource survey (as provided under Section 5024.1g) are presumed historically or culturally significant unless the preponderance of evidence demonstrates they are not. A resource that is not listed in or determined to be eligible for listing in the California Register is not included in a local register of historic resources, or is not deemed significant in a historic resource survey may nonetheless be considered historically significant by the Lead Agency for purposes of CEQA (Section 21084.1; Section 21098.1).

Archaeological Resources

CEQA requires a Lead Agency to identify and examine environmental effects that may result in significant adverse effects. Where a project may adversely affect a unique archaeological resource, Section 21083.2 requires the Lead Agency to treat that effect as a significant environmental effect. When an archaeological resource is listed in or is eligible to be listed in the California Register, Section 21084.1 requires that any substantial adverse effect to that resource be considered a significant environmental effect. Sections 21083.2 and 21084.1 operate independently to ensure that potential effects on archaeological resources are considered as part of a project's environmental analysis. Either of these benchmarks may indicate that a project may have a potential adverse effect on archaeological resources.

Other California Laws and Regulations

Other requirements for cultural resources management include Code Chapter 1.7, Section 5097.5 (Archaeological, Paleontological, and Historical Sites) of the California Public Resources Code. For lands owned by the state or a state agency, Chapter 1.75, beginning at Section 5097.9 (Native American Historical, Cultural, and Sacred Sites) applies.

The disposition of Native American burials is governed by Section 7050.5 of the California Health and Safety Code and Sections 5097.94 and 5097.98 of the Public Resources Code and falls within the jurisdiction of the Native American Heritage Commission (NAHC). If human remains are discovered, the County Coroner must be notified within 48 hours and there should be no further disturbance to the site where the remains were found. If the remains are determined by the coroner to be Native American, the coroner is responsible for contacting the NAHC within 24 hours. The NAHC, pursuant to Section 5097.98, will immediately notify those persons it believes to be most likely descended from the deceased Native American so they can inspect the burial site and make recommendations for treatment or disposal.

Local

Alameda County

Alameda County's policies regarding archaeological and historic resources are that they should be preserved and maintained "to the maximum extent possible…including but not limited to those listed on official State and National Registers." When site preparation and construction activities are proposed, the County's policy follows the State laws that require "adequate identification" of the resources, and,

where appropriate, preserves them (Alameda County, 1981, 1985). To implement these policies, the County has created a Park, Historic, and Recreation Commission and has adopted an overlay zoning designation to allow creation of historic preservation districts (for the latter, see Chapter 17.20, Alameda County Administrative Code).

Alameda County relies on information presented in a technical report prepared in 1976 entitled, "Archaeology in Alameda County: A Handbook for Planners." That document assesses the potential for archaeological resources throughout the County, using a 4-step sensitivity scale that ranges from minimal to moderate to high to extreme. The Project site is indicated as "moderate" sensitivity to the likelihood of encountering archaeological resources.[4]

ENVIRONMENTAL CONSEQUENCES AND MITIGATION MEASURES

Significance Criteria

The Project would have a significant environmental impact if it were to result in:

- A substantial adverse change in the significance of a historic resource as defined in Section 15064.5 of the Public Resources Code or of an historic property as defined by the National Historic Preservation Act.
- A substantial adverse change in the significance of an archaeological resource pursuant to Section 15064.5 of the Public Resources Code.
- The direct or indirect destruction of a unique paleontological resource or site or unique geological feature.
- The disturbance of any human remains, including those interred outside of formal cemeteries.

Impacts and Mitigation Measures

IMPACT 15.1: Disturbance of Previously Undisturbed Archaeological Resources, Paleontological Resources and/or Human Remains

POTENTIALLY SIGNIFICANT AND MITIGABLE IMPACT. Constructing a Camp Sweeney campus at the proposed site would require substantial excavation work to temporarily remove undocumented fill to varying depths, removing organic or other foreign or inappropriate material and then replacing the soil in accordance with applicable engineering criteria for moisture content and compaction. The proposed site work is required to ensure soil conditions beneath the proposed Camp Sweeney Replacement buildings would meet geotechnical and soil engineering criteria. The recommended site work may result in a potentially significant impact on previously unrecorded cultural resources if encountered during the excavation work.

However, because the site has been disturbed by previous uses, it is unlikely that the site work associated with the proposed Project would disturb any previously undisturbed archaeological resources, paleontological resources and/or human remains. Although unlikely, disturbance of

[4] Archaeological Sensitivity in Alameda County, in Archaeology in Alameda County: A Handbook for Planners. 1976.

previously unrecorded archaeological resources, paleontological resources and/or human remains would represent a potentially significant environmental impact associated with the Project.

Mitigation Measure Cultural – 15.1: Halt Construction/Assess Significance of Find. Prior to the initiation of ground-disturbing activities, the County of Alameda shall inform all supervisory personnel and all contractors whose activities may have subsurface soil impacts of the potential for discovering archaeological resources, paleontological resources and/or human remains and of the procedures to be followed if these previously unrecorded cultural resources are discovered. These procedures shall include:

- halting all ground-disturbing activities within 100 feet of the area where a potential cultural resource has been found;
- notifying a qualified archaeologist of the discovery; and
- following a treatment plan prescribed by the appropriate professional if the cultural resource is deemed significant, in accordance with federal or state law.

The County of Alameda shall retain an on-call archaeologist to periodically review the excavation work, assess the significance of the potential cultural resource and prescribe a treatment plan for it. The archaeologist will consult with a paleontologist as required. The archaeologist shall report any finds in accordance with current professional protocols. The archaeologist shall meet the Professional Qualifications Standards mandated by the Secretary of the Interior and the California Office of Historic Preservation.

In the event that any human remains are uncovered at the Project site during construction there shall be no further excavation or disturbance of the site or any nearby area until after the Alameda County Coroner has been informed and has determined that no investigation of the cause of death is required, and (if the remains are determined to be of Native American origin) the descendants from the deceased Native American(s) have made a recommendation to the person responsible for the excavation work, for means of treating or disposing of, with appropriate dignity, the human remains and any associated grave goods as provided in Public Resources Code Section 5097.98.

Resulting Level of Significance: Implementation of Mitigation Measure 15.1 would reduce the Project's potential impact to a less than significant level.

IMPACT 15.2: Loss of Historic Resources Resulting from the Demolition of Existing Camp Sweeney

LESS THAN SIGNIFICANT IMPACT. As stated in the Project Description (Chapter 3 of this EIR), once the new Camp Sweeney buildings are completed and occupied, and the existing Camp Sweeney buildings have been vacated, Alameda County intends to demolish the existing buildings and the gymnasium structure and restore that site to its approximate natural condition. Because of the age of the Camp Sweeney structures and the gymnasium, an historic evaluation was conducted to determine whether the buildings or the campus site itself would be considered historic resources under applicable CEQA criteria. Demolition of historic resources is considered a significant environmental impact. As noted above, the historic evaluation prepared by Preservation Architecture concluded that none of the individual buildings that comprise existing Camp Sweeney, nor the gymnasium structure, nor the Camp Sweeney campus taken as a whole qualify as historic resources under applicable CEQA criteria. Therefore, future demolition of the buildings and restoration of the Camp Sweeney site to natural conditions would be considered a less than significant impact on historic resources.

Effect on Historic Resources in the Vicinity of the Proposed Project Site

NO IMPACT. There are no historic resources adjacent to or in the vicinity of the Project Site.

16

ALTERNATIVES

INTRODUCTION

CEQA Guidelines §15126.6 requires the consideration of a range of reasonable alternatives to the proposed project that could feasibly attain most of the objectives of the proposed project and that are capable of eliminating significant adverse impacts of the project or reducing them to a less-than-significant level. The key provisions of the CEQA Guidelines regarding analysis of alternatives are presented below:

- The alternatives analysis should focus on alternatives to the project including alternative locations that are capable of avoiding or substantially lessening the significant effects of the project, even if these alternatives would impede to some degree the attainment of the project objectives or would be more costly (Guidelines §15126.6 (b))
- The No Project alternative shall be evaluated along with its impact. The No Project analysis shall discuss the existing conditions at the time the notice of preparation is published, as well as what would reasonably be expected to occur in the foreseeable future if the project were not approved based on current plans. The purpose of describing and analyzing the no project alternative is to allow decision makers to compare the impacts of approving the proposed project with the impacts of not approving the proposed project. After defining the no project alternative, the lead agency should proceed to analyze the impacts of the no project alternative by projecting what would reasonably be expected to occur in the foreseeable future if the project were not approved, based on current plans and consistent with available infrastructure and community services. (Guidelines §15126.6 (e))
- The range of alternatives required in an EIR is governed by a "rule of reason" that considers only those alternatives necessary to permit a reasoned choice. The alternatives are limited to those that would avoid or substantially lessen the significant environmental effects of the project. The CEQA Guidelines do not specify a precise number of alternatives to be evaluated in an EIR. (Guidelines §15126.6 (f))
- For alternative locations, only locations that would avoid or substantially lessen any of the significant effects of the project need be considered for inclusion in the EIR. The key question is whether any of the significant effects of the project would be avoided or substantially lessened by putting the project in another location. Only locations that would avoid or substantially lessen any of the significant effects of the project need be considered for inclusion in the EIR. If the lead agency concludes that no feasible alternative locations exist, it must disclose the reasons for this conclusion, and should include the reasons in the EIR. Where a previous document has sufficiently analyzed a range of reasonable alternative locations and environmental impacts for projects with the same basic purpose, the lead agency should review the previous document. The EIR may rely on the previous document to help it assess the

feasibility of potential project alternatives to the extent the circumstances remain substantially the same as they relate to the alternative. (Guidelines §15126.6 (f)(1))

- An EIR need not consider an alternative whose effects cannot be reasonably ascertained and whose implementation is remote and speculative. (Guidelines §15126.6 (f)(3))

The range of feasible alternatives analysis is intended to foster meaningful public participation and informed decision making. Among the factors that may be taken into account when addressing the feasibility of alternatives are environmental impacts, site suitability, economic viability, availability of infrastructure, general plan consistency, regulatory limitations, jurisdictional boundaries, and whether the proponent could reasonably acquire, control, or otherwise have access to an alternative site, per CEQA Guidelines §15126.6(f)(I).

An EIR must briefly describe the rationale for selection and rejection of alternatives. The lead agency may make an initial determination of which alternatives are feasible and merit in-depth consideration, and which are infeasible. Alternatives may be eliminated from detailed consideration in the EIR if they fail to meet project objectives, are infeasible, or do not avoid any significant environmental effects. (CEQA Guidelines §15126.6(c)).

ALTERNATIVES CONSIDERED AND REJECTED

The following discussion addresses alternatives that were considered and rejected, along with the rationale, in accordance with CEQA Guidelines §15126.6(c).

Reduced Scale Alternative

In light of the decreasing trend-line of youth offenders as set forth in the updated Needs Assessment, but narrowing the scope of the Camp Sweeney Project to address only a portion of the projected need,[1] a reasonable alternative to the Project would be one that provided all of the quality elements of the proposed Project at the proposed site, but scaled down to a lower maximum occupancy. A Reduced Scale Alternative assumes a capacity of 70 beds, approximately 40 percent less than what is proposed under the Project. The Reduced Scale Project would be designed to accommodate approximately 25 males, 25 females, and 20 special management youth. A potential site plan for this level of occupancy would have one less dormitory building (two for males, instead of three) compared with the Project, but would otherwise have the same number of supporting facilities as proposed for the Project, namely, an administration building, a food service building, a building for programs and educational classrooms, and a gymnasium. While the buildings could be smaller, requiring a smaller site and fewer staff, the environmental effects of a reduced scale project, whether at the proposed site adjacent to Fairmont Drive, or at the existing Camp Sweeney site, would be approximately the same because this alternative would require essentially the same supporting buildings and facilities whether for a resident population of 70 or 120. The low level of daily traffic to and from the site would be marginally less than projected for the Project, which is already so minor as to be nearly imperceptible in comparison with baseline conditions. Most importantly, this alternative was rejected because it (1) would not achieve any

[1] CGL Companies, *Needs Assessment Update for Camp Sweeney*, April 17, 2015. The occupancy target of 120 beds recommended in this updated Needs Assessment is based in part on being able to accommodate adjudicated females as well as males and to avoid or reduce the County's reliance on out-of-county placements for males and females, reduce or avoid the need for group home placements, and be able to accommodate juvenile males and females housed at the Juvenile Justice Center awaiting placement elsewhere.

meaningful reduction in potentially significant environmental effects and (2) it would fail to meet the Project Objective 1 which calls for capacity levels consistent with the updated Needs Analysis. For these two reasons, the Lead Agency has determined that a Reduced Scale Alternative would not be a viable alternative and therefore it is not considered further in this EIR.

The Former Juvenile Hall Site Alternative

The site of the former Juvenile Hall was initially considered to be an ideal replacement site for a new Camp Sweeney campus. The positive attributes of this site included that it remained very close to the new Juvenile Justice Center and was relatively far away from the nearby Hillcrest Knolls community. This site was the assumed site and the focus during the early planning stages of the Project because it was considered large enough to accommodate new Camp Sweeney buildings in a campus like arrangement. As with the Project and other alternatives, the existing Camp Sweeney buildings would be removed after the new campus was built and occupied. However, before determining where outdoor athletic fields might be developed, this site was rejected from further consideration because of the presence of multiple traces of the Hayward Fault throughout the site which were identified in the early geotechnical investigations following the removal of the former Juvenile Hall buildings. Seismic considerations as a potential site for new buildings early on led to the rejection of this site as a viable candidate site for the Project. On the other hand, while not a suitable site for future buildings, the former Juvenile Hall site was identified as an ideal location for outdoor athletic fields, in support of new campus facilities at the Project site.

Other Fairmont Campus Sites Alternative

The entire Fairmont Campus is owned by Alameda County, but areas within its boundaries have been placed under the jurisdiction of different county agencies, each using its portion of the Campus to carry out its respective public service mission. The County Sheriff's Office has control of a large portion of the currently undeveloped land which is used, in part, by Dig Deep Farms for agricultural purposes. The County Health Department operates the Fairmont Hospital and related facilities. The Mental Health Department operates the John George Psychiatric Hospital and its related parking lots and facilities. Other agencies operate their respective facilities. Each of the County agencies has plans for future uses or existing commitments that attach to and encumber their respective portion of the Fairmont Campus, making it unavailable to other agencies or purposes. Although the lines of agency jurisdiction are not as fixed as private property parcels lines are (since the entire area is owned by the County), for the purposes of this EIR, areas of the Fairmont Campus that are subject to jurisdictional commitments are considered unavailable sites for the Project. Having surveyed all currently unbuilt sites within the overall Fairmont Campus, the Lead Agency has determined that, aside from the sites discussed in Alternative 2 , there are no other on-campus sites, whether vacant or not, that would have the availability, the size and/or the physical characteristics (e.g., topography, ease of access) that would make them feasible. For this reason, other Fairmont Campus sites are not considered worthy of further evaluation in this EIR.

CRITERIA FOR SELECTING PROJECT ALTERNATIVES

The following were the primary criteria used to select alternatives for evaluation in this EIR:

A. Reducing or Avoiding Significant Environmental Impacts of the Project

Alternatives that would have less severe impacts than are identified for the Project would be considered under this criterion to be environmentally superior to the Project.

The analyses presented in Chapters 4 – 15 of this EIR identified aspects of the proposed Project that would result in potentially significant and mitigable impacts, impacts that are less than significant, and aspects that would have no impact; no aspect of the Project would result in a Significant and Unavoidable impact. In other words, assuming all potentially significant impacts of the Project would be mitigated to less than significant levels, the Project's overall impact on the environment would be less than significant.

B. Meeting Project Objectives

The degree to which the alternative would meet the stated project objectives is the second point of comparison for evaluating the selected alternatives. As stated in Chapter 3 of this EIR, Project Description, the Project Objectives are:

1. To produce a new Camp Sweeney campus capable of serving both male and female youth in a safe and secure environment, with an occupancy capacity of 120 beds, consistent with the Needs Study, including facilities for 64 males, 32 females and a Special Programming building for 24 males.

2. To retain close physical proximity to the Juvenile Justice Center and its juvenile court facilities for program operating efficiencies and staff and program inter-connectedness and interdependencies.

3. To create a campus setting that would be "camp like" in feeling and atmosphere, with small-scaled buildings of one and two stories, maximum.

4. To create a physical environment through careful site planning and design, creating positive opportunities for staff to work with youth and provide guidance and counseling in small group settings that promote the Program's behavioral and educational goals.

5. To create an environment that projects the rehabilitative goals of positive and lasting change in the lives of the youths and avoids the look and feel of a detention/ incarceration facility.

ALTERNATIVES SELECTED FOR FURTHER ANALYSIS

The following section discusses the alternatives evaluated in this Draft EIR and the comparative environmental effects of each. The alternatives considered in this analysis are as follows:

1. The CEQA-required No Project Alternative
2. The Existing Site Reuse Alternative
3. The Off Site Alternative (i.e., not on the Fairmont Campus but elsewhere in Alameda County)

The alternatives chosen for this analysis, beyond those mandated by CEQA, were developed in light of the foregoing selection criteria. A summary of the components and rationale for each of the selected alternatives is presented below in **Table 16.1**.

TABLE 16.1: SUMMARY OF PROJECT ALTERNATIVES

Alternative		Description	Rationale
1	No Project	Camp Sweeney continues to operate as at present at its existing site	Per CEQA
2	Existing Site Reuse	Repair or replace existing buildings and develop new campus at the existing Camp Sweeney site	Retains proximity to the Juvenile Justice Center with maximum distance to adjacent residential area
3	Off Campus	Select Other Alameda County Site for New	Relocates Camp Sweeney to site away from

	Site	Camp Sweeney	Fairmont Campus per prior EIR

The following analysis describes the potential impacts of each project alternative compared to the proposed Project. For those areas where the impacts are not reduced or changed from those of the proposed project, the analysis is abbreviated. A summary of the comparison of the impacts for each alternative is presented below in **Table 16.2**.

TABLE 16.2: COMPARISON OF IMPACTS – PROJECT ALTERNATIVES

Impact	Alternative 1 – No Project	Alternative 2 – Existing Site Reuse	Alternative 3 – Off Campus Sites
Land Use and Planning	Less	Less	Varies
Aesthetics and Visual Quality	Less	Less	Varies; generally the same or more
Geology, Soils, and Seismicity	Same or less	Same or less	Same or less
Hydrology and Water Quality	Less	Same	Same
Biological Resources	Less	Same	Varies
Transportation	Same	Same	Greater
Noise	Less	Less	Varies
Air Quality and GHG Emissions	Less	Same	Same
Hazards and Hazardous Materials	Same, potentially greater	Same	Same
Public Services	Same	Same	Greater
Utilities	Same	Same	Greater
Cultural and Historic Resources	Less	Same	Varies

Significant Impacts

The proposed Project would result in potentially significant impacts in the following categories, as described in this EIR: aesthetics and visual quality; geology, soils, and seismicity, water quality; biological resources; noise; air quality; hazardous materials; public services; and cultural resources. All Project impacts can be reduced to a level of less than significant with implementation of the mitigation measures identified in this Draft EIR.

Alternative 1: The "No Project" Alternative

Description

As required by CEQA, the evaluation of the No Project alternative must discuss the existing conditions, as well as what would be reasonably expected to occur in the foreseeable future if the Project is not approved. Under the No Project scenario, the use and operation of Camp Sweeney would continue to operate at its existing site and in accordance with existing operations (CEQA Guidelines, §15126.6 (e)). All existing Camp Sweeney buildings would be retained and would continue to function as at present. This alternative would accept the status quo conditions that have been described in both the 2008 Needs Study and the 2015 Needs Study Update.[2] The existing level of occupancy (i.e., up to 60 male

[2] See Project Description, Chapter 3.

youth) would remain as the occupancy limit of the program and it would remain a male-only facility. The existing level of Probation Department staff and Education Department staff would remain the same.

Impacts

The No Project Alternative would avoid all of the potentially significant environmental effects that result from construction activities required for the proposed Project. Operationally, environmental effects would be comparable to or slightly less because of the lower occupancy level (60 versus 120). With no construction, there would be no construction-related dust or other air emissions, no change in GHG emissions, no removal of trees, no excavation of potential archaeological or paleontological resources or human remains, no changes to the site's geological or soils conditions, no change in the level of exposure to hazards or hazardous materials, no change in how the site deals with stormwater, no change in land use, no construction noise, no change in the use of public services or utilities, and no change in traffic conditions.

However, the No Project alternative would continue the use of buildings and facilities identified as having serious physical deficiencies, non-compliance with various basic building code and energy efficiency standards (e.g., Title 24, Americans with Disabilities Act), and inadequate and porous fencing and security facilities resulting in chronic walk-offs and security breaches. In addition, the No Project alternative would not address the need to accommodate female youth or provide a Special Programming building and would not be conducive to the behavior modification and rehabilitation strategies that have long been seen as a more effective means of addressing juvenile delinquency and juvenile criminal behavior. Thus the No Project alternative would fail to meet the Project Objectives, with the exception of retaining its close proximity to the Juvenile Justice Center.

Summary

Although the No Project Alternative would avoid all of the adverse environmental effects that are associated with construction activities (all of which are mitigable to less than significant effects), operational effects would be similar to the Project because the scale of operations would be comparable. The main difference would be the inability of the existing Camp Sweeney to meet the Project Objectives and to continue, indefinitely, an institutional use and program well documented as needing to be updated and improved.

Alternative 2: The "Existing Site Reuse" Alternative

Project Description

This Alternative assumes implementation of the Project, essentially as currently proposed, but instead located at the site of the existing Camp Sweeney campus and not at the proposed site adjacent to Fairmont Drive. Existing Camp Sweeney buildings that are on geologically safe sites could either be rehabilitated or replaced to meet current building codes and standards; buildings on unsafe sites would be removed and replaced elsewhere within the bounds of the existing campus on sites determined to not pose seismic or other geological risks. Geologically unsafe building sites would be configured as part of the site plan for open space uses consistent with the therapeutic/rehabilitative programming ideas that underlie the planning for the Project. The site of the former Juvenile Hall would be used as athletic fields, consistent with the proposed Project. Rehabilitating or constructing new Camp Sweeney buildings at the existing site could potentially be implemented in a phased manner, or could be done all at one time, requiring youth currently housed there to be temporarily relocated at the Juvenile Justice Center or some other off-site location.

Alternative 2 assumes that new replacement buildings, including dormitories, administration building, food service, educational and gymnasium facilities could all be accommodated within the general bounds of the existing Camp Sweeney site. New buildings would be constructed in accordance with current code standards and with appropriate features designed to reduce seismic or other geologic risks to acceptable levels (i.e., comparable to what would be expected at the proposed Replacement Site) and designed to accommodate females and a Special Programming facility. Enhanced perimeter fencing and other security devices and systems, comparable to what is proposed with the Project, would be constructed to prevent unauthorized walk offs or contraband intrusion from outside. The existing roadway is not sufficient to handle typical construction-related vehicles including equipment used in geotechnical investigations and would have to be re-built to accommodate them prior to the commencement of geotechnical investigation as well as any construction.

Impacts

Land Use. This alternative would use the same site as the current Camp Sweeney. There would be no land use conflicts or related impacts. Retaining the use of the existing site would maintain the same distance separation to the nearby Hillcrest Knolls residential neighborhood. Although the proposed Project would have no land use impacts, maintaining the existing physical separation to Hillcrest Knolls would remove the perception of a potential land use compatibility impact.

Aesthetics and Visual Quality. Alternative 2 would reduce the magnitude of visual changes compared to the proposed Project because the existing site is substantially obscured from off-site views due to its distance from Fairmont Drive and intervening stand of mature trees that surround the site. The overall visual effect of the project would be minimal as would the potential for light and glare impacts. Aesthetic impacts of the proposed Project, which are less than significant, would be less with Alternative 2.

Geology, Soils and Seismicity. One of the primary reasons for relocating new Camp Sweeney buildings and facilities to the proposed Replacement Site adjacent to Fairmont Drive is that the existing site is seismically vulnerable and new facilities should be located where the risk of seismically induced hazards would be greatly reduced. However, detailed geotechnical investigations to validate that assumption were not conducted at the time the Project was initially conceived, leaving the question of geologic and seismic feasibility largely undetermined. None of the extensive geotechnical investigations involving trenching and boring work that has been undertaken at the Project site has involved the existing campus site.

To shed some light on the issue, the Project's geotechnical consultant, Kleinfelder, was asked to compile known information about the existing campus site; the engineer's letter report provides a summary of prior investigations.[3] This report confirms that the A-P Zone extends through a portion of the existing Camp Sweeney campus, with approximately two-thirds of the area outside the Zone altogether, one-third inside the Zone, and none of the campus within the most seismically vulnerable central part of the Zone (see **Figure 16.1**). With regard to seismic risks, and based on inferences from prior site investigations, the Kleinfelder letter report concludes that "…that there is a low to moderate probability of active faulting crossing the site."[4] The Kleinfelder letter report also notes the presence of potential risks associated with dormant landslides uphill from the existing campus site (See **Figure 16.2)**. From this

[3] Kleinfelder, *Preliminary Geologic Assessment Existing Camp Sweeney Site 2400 Fairmont Drive, San Leandro, California*. January 12, 2016, p. 1.

[4] Ibid., p. 1.

information it is clear there are geotechnical risks associated with the existing site. Before this Alternative 2 could be considered as a feasible alternative, additional site investigations would be necessary. Such investigations could determine whether there would be an adequate number of seismically safe building sites at the existing campus to support a comparably sized and equipped replacement project. The studies could also determine the nature of the underlying soil conditions, whether soil remediation, as required for the Project site, would be necessary at the existing campus site under Alternative 2, and determine ways to mitigate for potential landslide risks. Given the lack of reliable geotechnical information, impacts related to seismic and related geologic hazards would therefore be considered potentially significant. At a minimum, **Mitigation Measure Geology – 6.1** and **Mitigation Measure Geology – 6.2** would be required for Alternative 2, the same as with the proposed Project.

Hydrology and Water Quality. Development under Alternative 2 would be subject to all legal requirements to manage stormwater from development (building) sites, thereby avoiding significant drainage and water quality impacts, as with the Project. This alternative would likely be similar to potential alterations to the hydrologic regime compared to the Project due to the similar Project site and building footprints. Since the hydrologic impacts of the Project were determined to be less than significant, the same would be true for Alternative 2. This alternative would have similar water quality impacts because of the similarity of the area that would be disturbed and the amount of impervious surface that would result. BMPs (e.g., preparation and implementation of a SWPPP) would avoid impacts to water quality under this alternative, similar to the project.

Biological Resources. Alternative 2 would require extensive site disturbance at the existing Camp Sweeney site to address geologic and seismic concerns and to address drainage and water quality concerns. Site work would require removal of trees and other vegetation similar to what is proposed for the Project. The area surveyed for biological resources as described in Chapter 8 of this EIR included the existing Camp Sweeney campus area; no sensitive species were identified and mitigation measures (**Biology – 8.1a** and **Biology – 8.1b**) calling for pre-construction surveys for nesting birds and roosting bats would apply to Alternative 2 to the same extent as to the Project. Unlike the Project, however, Alternative 2 does not have the potential to affect a potential wetland. Like the Project, this alternative would involve tree removal. The overall impacts of this alternative to biological resources would be comparable to the proposed Project.

Transportation. Alternative 2 would have the same or similar traffic trips as with the Project, which has been shown to have impacts that are all less than significant.

Noise. Being located farther from Fairmont Drive, exposure to exterior noise levels from nearby traffic or other sources under Alternative 2 would be less at the existing Camp Sweeney site and therefore **Mitigation Measure Noise – 10.1** would not be required. Similarly, because of the increased distance to the nearby residential community, noise from mechanical equipment required for the new buildings would be less than significant and **Mitigation Measure Noise – 10.3** would not be required. Construction noise impacts, determined to be less than significant for the Project, would be even less under Alternative 2 because of the greater distance to sensitive receptors. The overall impacts of this alternative on noise would be less than those of the proposed Project.

Air Quality and GHG Emissions. Alternative 2 would likely result in similar or comparable air pollutant and GHG emissions related to construction activities and similar operational level emissions, given that it would have the same number of buildings, would serve the same number of youth, and have similar staffing levels. This alternative would generate temporary emissions of diesel and dust during construction; however, fewer sensitive receptors would be affected given the increased distance to the nearby residential neighborhood.

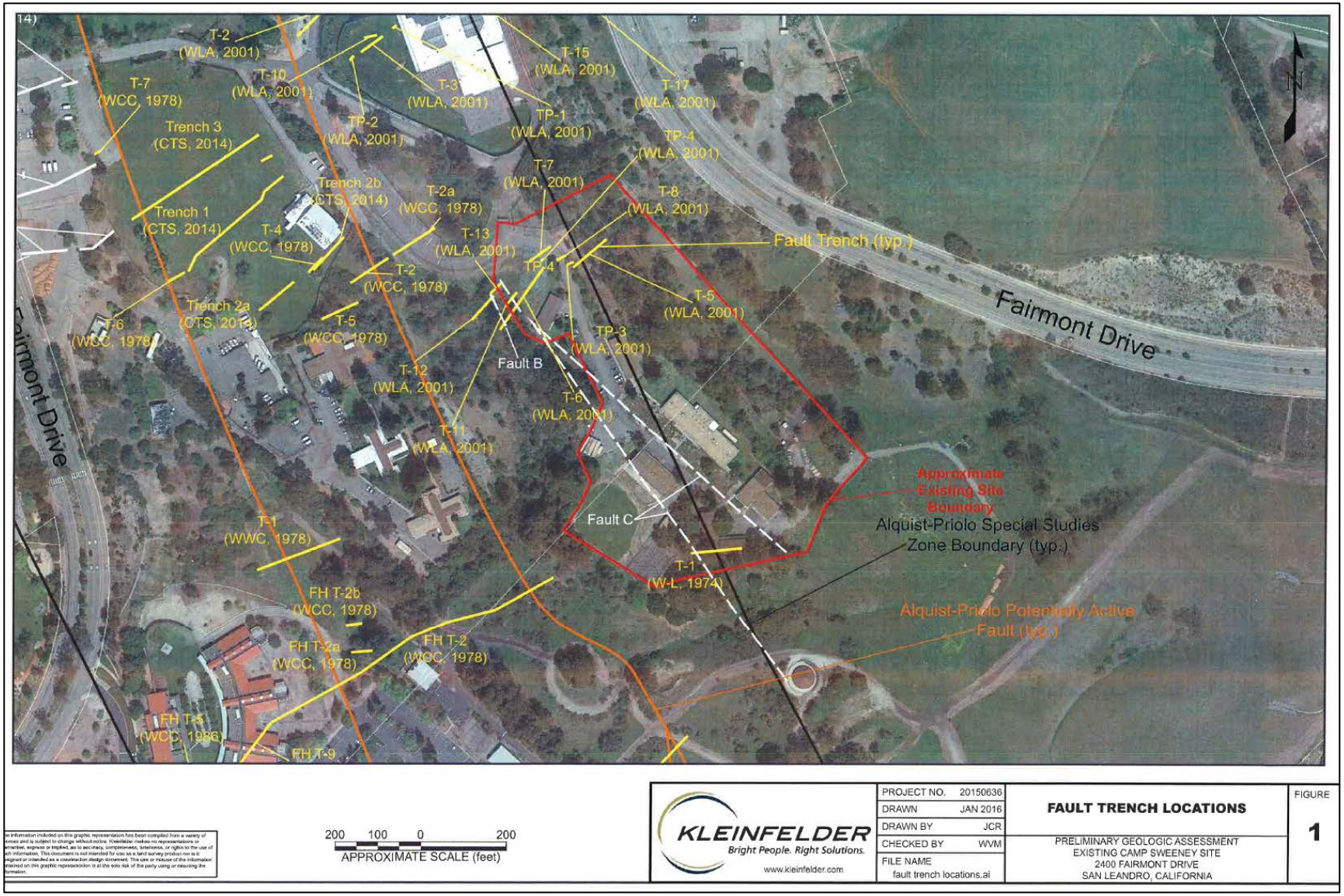

Figure 16.1. Fault Trench Locations – Existing Camp Sweeney Site

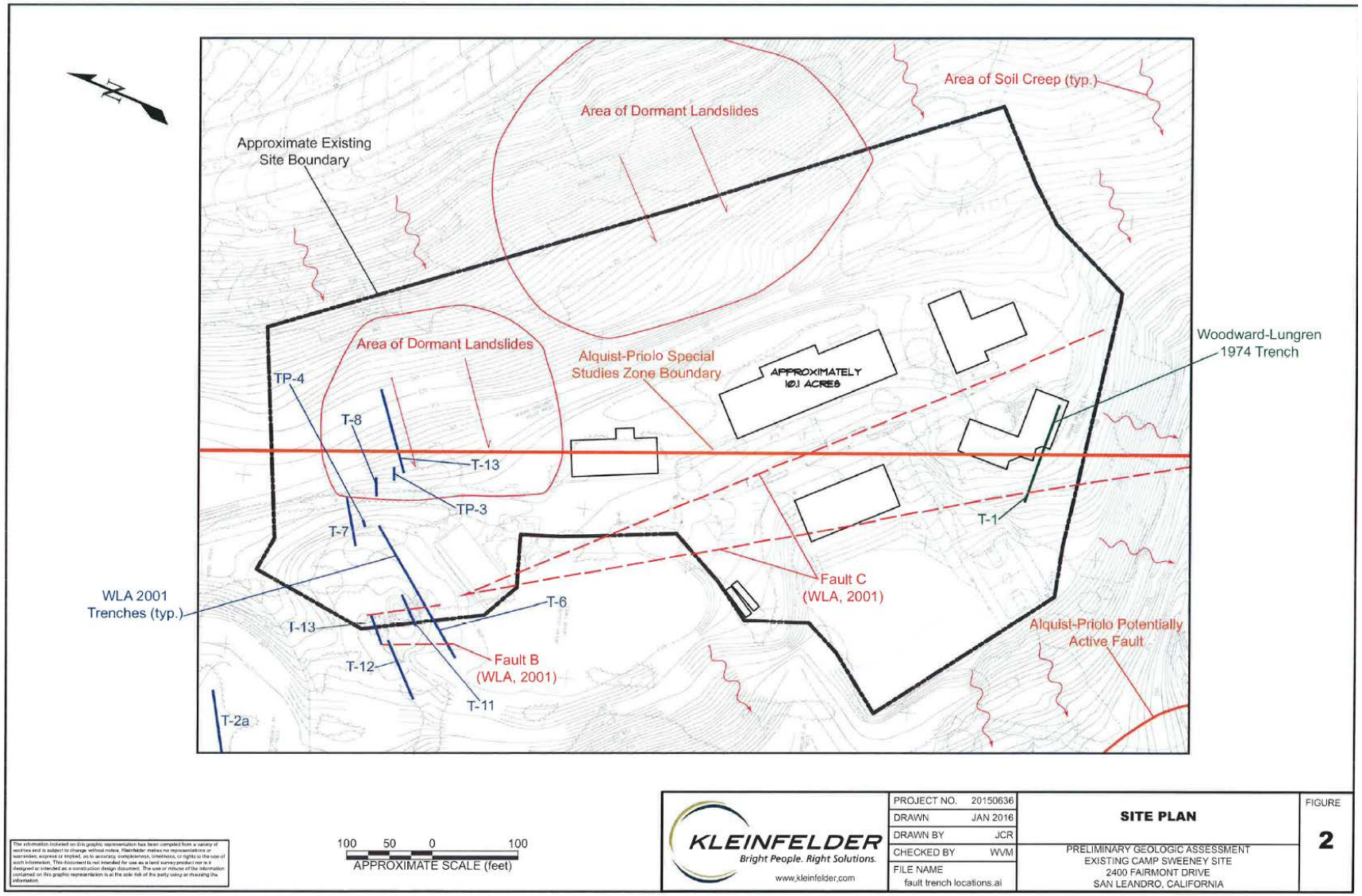

Figure 16.2. Location of Dormant Landslides Near Existing Campus Site

The overall impacts of this alternative on air quality would be similar to but slightly less than those of the proposed Project.

Hazards and Hazardous Materials. Less is known about the presence of hazardous materials in the soils at the existing Camp Sweeney site than at the Project site and therefore, the risk of exposing construction workers or future occupants of a reconstructed Camp Sweeney presents unknown risks related to soil conditions. However, with regard to the buildings themselves, **Mitigation Measure Hazards – 12.1** (safe removal of asbestos during demolition) would be required for Alternative 2 the same as with the Project. In all other respects, impacts related to hazards and hazardous materials would present either no impacts or less than significant impacts, the same as for the Project. Site characterization for the existing Camp Sweeney site would likely be required prior to construction activities and appropriate remediation implemented as needed. Alternative 2 would expose a comparable number of workers to potential hazards. The overall impacts of this alternative associated with hazards and hazardous materials would be similar to the proposed Project.

Public Services and Utilities. Alternative 2 would have the same level of demand on services and utilities compared with the Project because it would result in a similar number of buildings and a similar occupancy load and staffing level. This alternative would place the same or similar demands on police and fire services, parks, water, sanitary sewer, and solid waste disposal services, as well as energy. The overall public services and utilities impacts of Alternative 2 would be the same as for the proposed Project.

Cultural Resources. As described and assessed in Chapter 15 of this EIR, the existing Camp Sweeney buildings are not historical resources pursuant to CEQA criteria and therefore rehabilitation or removal/replacement of the buildings would not have an adverse environmental effect. However, like the Project, site grading work would have the potential to disturb unknown archaeological or paleontological resources or human remains and therefore the same mitigation measure that is required of the Project (**Mitigation Measure Cultural – 15.1**) would be required of Alternative 2. The overall impacts of this alternative to cultural resources would be substantially the same as the proposed Project.

Alternative 3: The "Non-Fairmont Campus Off-Site Alternative"

Project Description

CEQA requires evaluation of a reasonable range of alternatives to the project, "or to the location of the project" (Guidelines §15126.6). In this case consideration is given to constructing the Camp Sweeney Replacement Project on another site not within the Fairmont Campus, but elsewhere within Alameda County. This alternative would consist of the same programmatic elements as proposed for the Project—namely, an approximately 10-acre site that can feasibly accommodate 7 buildings housing a total of 120 youths and include 4 residence buildings, an administration building, a food services and gym building, a programs building, adequate space for staff and visitor parking, would be capable of ensuring adequate level of security, and would have proximate access to athletic fields large enough for standard-sized soccer, football and baseball fields, and two outside basketball courts.

CEQA Guidelines 15126.6 (f)(2)(c) states that:

> Where a previous document has sufficiently analyzed a range of reasonable alternative locations and environmental impacts for projects with the same basic purpose, the lead agency should review the previous document. The EIR may rely on the previous document to help it assess the feasibility of potential project alternatives to the extent the circumstances remain substantially the same as they relate to the alternative.

The 2003 Juvenile Justice Facility/East County Government Center EIS/EIR (the "Prior EIR") considered three alternative locations for the proposed Juvenile Justice Facility aside from the so-called San Leandro site. The alternative sites evaluated in the Prior EIR were:

- the Glenn Dyer Detention Center Site in downtown Oakland,
- the Pardee/Swan Site which is a vacant parcel near the Oakland Airport, under the land use jurisdiction of the Port of Oakland, and
- the East County Government Center site in Dublin, near the Santa Rita Jail.[5]

It is assumed for the purposes of this EIR that the evaluation of alternative sites in the Prior EIR is applicable to the current Camp Sweeney Replacement Project pursuant to CEQA Guidelines 15126.6(f)(2)(c) even though the Juvenile Justice Center, while similar in many respects, could be considered a different type of institutional use compared with Camp Sweeney because of its greater security requirements associated with housing adjudicated youth felons. Similarities include the fact that both share similar purposes—namely, detention of adjudicated youth following conviction of criminal activity, with the intent of rehabilitation, re-socialization, and return to their community. Although the Juvenile Justice Center houses youth convicted of more violent crimes than youth assigned to Camp Sweeney, both institutions would be considered locally undesirable land uses from the perspective of the public, particularly residences nearby. Despite their differences, environmental effects including air quality, noise, and light and glare would be similar. Because of their similarity and shared operational characteristics, this EIR considers the evaluation of alternative sites from the Prior EIR to be applicable to the Camp Sweeney EIR. **Table 16.3** summarizes the findings and conclusions of the Prior EIR regarding the comparative advantages and disadvantages of the two remaining alternative sites in terms of the severity of environmental effects. Explanations and supporting documentation as to the how Impacts in the Prior EIS/EIR were determined to be "Less than Significant," Potentially Significant Mitigable," or "Significant and Unavoidable" were provided in that document.

TABLE 16.3: COMPARATIVE EVALUATION OF ALTERNATIVE OFF-CAMPUS SITES

Impact	Proposed Project Site	Glenn Dyer site, Downtown Oakland	Pardee / Swan Site
Land Use Planning			
Physical Division of an Existing Community	No Impact	No Impact	No Impact
Conflict with Applicable Land Use Plans and Policies	No Impact	No Impact	No Impact
Conflict with Applicable Habitat Conservation Plan	No Impact	No Impact	No Impact

[5] Site 15A, also in Dublin, was included in the Prior EIS/EIR but only as an alternative site for the East County Government Center facility, not the Juvenile justice facility; therefore it is not included in this comparative assessment. In addition, the County is constructing the East County Courthouse facility on the East Dublin site at this time; consequently ,it can no longer be considered as a potential site for Camp Sweeney and is not included in the evaluation of this Alternative 3.

Impact	Proposed Project Site	Glenn Dyer site, Downtown Oakland	Pardee / Swan Site
Aesthetics and Visual Quality			
Substantial Degradation in Visual Character	Beneficial Impact	Less than Significant	Less than Significant
Substantial Adverse Effect on Scenic Vista	No Impact	No Impact	Significant Unavoidable
Creation of New Source of Substantial Light	Potentially Significant, Mitigable	Less than Significant	Less than Significant
Geology, Soils, and Seismicity			
Fault Rupture	Potentially Significant, Mitigable	No Impact	No Impact
Ground Shaking	Potentially Significant, Mitigable	Potentially Significant, Mitigable	Potentially Significant, Mitigable
Liquefaction	Less than Significant	Less than Significant	Potentially Significant, Mitigable
Landslides	Potentially Significant, Mitigable	No Impact	No Impact
Soil Erosion	Potentially Significant, Mitigable	Potentially Significant, Mitigable	Potentially Significant, Mitigable
Soil Instability	Potentially Significant, Mitigable	Less than Significant	Potentially Significant, Mitigable
Expansive Soils	Potentially Significant, Mitigable	Less than Significant	Potentially Significant, Mitigable
Hydrology and Water Quality			
Violation of Water Quality Standards	Potentially Significant, Mitigable	No Impact	Potentially Significant, Mitigable
Depletion of Groundwater Resources	No Impact	No Impact	No Impact
Alternation of Drainage Patterns	No Impact	No Impact	No Impact
Exceed Capacity of Stormwater Infrastructure	Potentially Significant, Mitigable	No Impact	Potentially Significant, Mitigable
100 Year Flood Hazard Area	No Impact	No Impact	No Impact

Impact	Proposed Project Site	Glenn Dyer site, Downtown Oakland	Pardee / Swan Site
Flood Hazard Exposure	No Impact	No Impact	No Impact
Biological Resources			
Special Status Species	Potentially Significant, Mitigable	No Impact	Potentially Significant, Mitigable
Loss of Sensitive Natural Communities	No Impact	No Impact	No Impact
Loss or Modifications to Wetlands	No Impact	No Impact	Less than Significant
Loss of Wildlife Habitat	Less than Significant	No Impact	Potentially Significant, Mitigable
Conflict with Local Policies	Potentially Significant, Mitigable	No Impact	Potentially Significant, Mitigable
Conflict with any Habitat Conservation Plan	No Impact	No Impact	No Impact
Transportation			
Increased Traffic in Excess of Capacity	Less than Significant	Less than Significant	Less than Significant
Conflict with Applicable Congestion Management Program	Less than Significant	Less than Significant	Less than Significant
Change in Air Traffic Pattern	No Impact	No Impact	No Impact
Increased Hazard Due to Design	Less than Significant	Less than Significant	Less than Significant
Inadequate Emergency Access	Less than Significant	No Impact	No Impact
Conflict w/ Alternative Transportation Policies	Less than Significant	Less than Significant	Less than Significant
Noise			
Noise and Land Use Compatibility	Potentially Significant, Mitigable	Significant Unavoidable	Less than Significant
Vehicular Traffic Noise Increase	Less than Significant	Less than Significant	Less than Significant
Operational Noise	Potentially Significant, Mitigable	N/A	N/A
Construction Noise	Less than Significant	Significant Unavoidable	Less than Significant
Air Quality and Greenhouse Gas Emissions			
Construction-Period Dust, Emissions and	Potentially	Significant	Significant

Impact	Proposed Project Site	Glenn Dyer site, Downtown Oakland	Pardee / Swan Site
Odors	Significant, Mitigable	Unavoidable	Unavoidable
Operational Emissions	Less than Significant	Less than Significant	Less than Significant
Construction Period TAC Exposure of Sensitive Receptors	Less than Significant	Significant Unavoidable	Significant Unavoidable
Operational Period Exposure of Sensitive Receptors	Less than Significant	N/A	N/A
Carbon Monoxide Hotspots	Less than Significant	Less than Significant	Less than Significant
Odors	No Impact	Less than Significant	Less than Significant
Hazards and Hazardous Materials			
Hazardous Materials Transport, Use and Disposal	Potentially Significant, Mitigable	No Impact	Potentially Significant, Mitigable
Accidental Hazardous Materials Release	Less than Significant	No Impact	No Impact
Hazardous Materials within ¼ Mile of School	No Impact	No Impact	No Impact
Construction on a Listed Hazardous Materials Site	No Impact	No Impact	No Impact
Safety Hazard Near Public Airport	No Impact	No Impact	Less than Significant
Safety Hazard Near Private Airstrip	No Impact	No Impact	No Impact
Impairment with Emergency Response	No Impact	No Impact	No Impact
Exposure to Risk Involving Wildland Fires	No Impact	No Impact	No Impact
Public Services			
Indirect Effects on Public Services	Less than Significant	Less than Significant	Less than Significant
Need for Additional Facilities – Fire, Emergency Medical, Hazardous Materials	Less than Significant	Less than Significant	Less than Significant
Need for Additional Facilities – Police	Less than Significant	Less than Significant	Less than Significant
Need for Additional Facilities – Schools	Less than Significant	Less than Significant	Less than Significant
Need for Additional Facilities – Park and Recreation	No Impact	No Impact	Less than Significant
Need for Additional Facilities Solid Waste	Less than Significant	Potentially Significant, Mitigable	Potentially Significant, Mitigable

Impact	Proposed Project Site	Glenn Dyer site, Downtown Oakland	Pardee / Swan Site
Need for Additional Facilities – Library	Less than Significant	Less than Significant	Less than Significant
Utilities			
Availability of Water Supply	Less than Significant	Less than Significant	Less than Significant
Need for expanded Water Distribution Systems	No Impact	No Impact	Less than Significant
Need for Expanded Wastewater Treatment	Less than Significant	Less than Significant	Less than Significant
Need for Expanded Wastewater Collection	Less than Significant	No Impact	Potentially Significant, Mitigable
Need for Additional Storm Drainage Services	Less than Significant	No Impact	Less than Significant
Cultural and Historic Resources			
Disturbance of Previously Unrecorded Cultural Resources	Potentially Significant, Mitigable	Potentially Significant, Mitigable	No Impact
Loss of Historic Resources	Less than Significant	Significant Unavoidable	Significant Unavoidable
Effect on Historic Resources in Project Vicinity	No Impact	Less than Significant	No Impact
Summary of Impacts			
No Impact	23	32	21
Less than Significant	25	21	24
Potentially Significant, Mitigable	16	4	13
Significant Unavoidable	0	5	4
Totals	**64**	**62**	**62**

As shown in **Table 16.3**, all aspects of the proposed Project evaluated in this EIR are found to have no impact, less than significant impacts, or impacts that are potentially significant and mitigable. In comparison, each of the other alternative sites has been identified as resulting in several significant and unavoidable environmental impacts. Based on this comparison, the proposed Project on the Fairmont Campus would be environmentally superior to all of the other locations evaluated in the Prior EIR because it would have no environmental impacts considered significant and unavoidable.

In addition, locating the proposed Project at any of the alternative sites would fail to meet Project Objective 2—maintaining close physical proximity to the Juvenile Justice Center facility because of the fundamental inter-connectedness of both institutions. For example, the Juvenile Court and its staff are housed within the Juvenile Justice Center facility; all youth who are assigned to Camp Sweeney are processed through the Juvenile Court system. All food for Camp Sweeney youth is prepared at the

Juvenile Justice Center kitchen and brought down and reheated at Camp Sweeney. Operating supplies are delivered initially to the Juvenile Justice Center and then brought down to Camp Sweeney. Probation Department staff who work with youth at Camp Sweeney also work at Juvenile Justice Center; close working coordination between and among Probation Department staff at both institutions has valuable shared benefits regarding the monitoring, oversight and case management of individuals at Camp Sweeney.

Locating a new Camp Sweeney campus somewhere other than at the Fairmont Campus would result in operational and programmatic complications and adverse environmental effects including increased daily vehicle trips between the Juvenile Justice Center and the off-site Camp Sweeney campus for staffing, delivery of supplies and materials, food service, the intake and discharge of youth and visitors. Most of these trips currently occur within the Fairmont Campus, either on foot, electric carts, autos or vans but would require greater use of public streets and highways if Camp Sweeney were located elsewhere. Land use conflicts—which would be minimal at the proposed site except with regard to the nearby Hillcrest Knolls community—would be potentially the same or greater at the alternative locations but would involve different groups of affected nearby sensitive receptors.

In conclusion, none of the off-site location alternatives would be considered environmentally superior to the proposed Project and all such alternatives would be rejected due to failing to meet important Project Objectives.

ENVIRONMENTALLY SUPERIOR ALTERNATIVE

In addition to the discussion and comparison of impacts of the proposed Project and the alternatives provided above, Section 15126.6 of the CEQA Guidelines requires that an "environmentally superior" alternative be identified, and the reasons for such a selection disclosed. In general, the environmentally superior alternative is one which minimizes adverse environmental impacts while achieving the basic objectives of the project. Identification of the environmentally superior alternative is an informational procedure and the alternative selected as environmentally superior may not be the alternative that best meets the Project objectives or the objectives Alameda County.

The No Project alternative could be considered environmentally superior because the potentially significant adverse impacts associated with the Project would be avoided. However, the No Project alternative would continue to expose resident youth and staff to hazards arising from deteriorated, non-code compliant condition of the existing buildings. The No Project alternative would also fail to satisfy four of the primary Project objectives. CEQA Guidelines Section 16126.6 9 (e) provides that if the environmentally superior alternative is the "no project" alternative, the EIR shall also identify an environmentally superior alternative among the other alternatives.

In this case, the proposed Project would not result in any significant and unavoidable impacts. All potential impacts of the Project are either less than significant or can be reduced to less than significant levels with implementation of the mitigation measures contained in this Draft EIR. Accordingly, any of the differences between the proposed Project and the Alternatives are marginal, rather than substantial.

Both the Project and Alternative 2 (Existing Site Reuse) would result in similar, potentially significant environmental effects that can be mitigated to less than significant levels through implementation of similar design features, compliance with regulatory requirements and implementation of similar mitigation measures identified to reduce and/or avoid potential environmental impacts. Therefore, both the Project and Alternative 2 are relatively equal in their comparative environmental effects (i.e., less than significant) with only marginal differences, as discussed below.

Geologic Hazards

- The Project site lies entirely within the Alquist–Priolo Earthquake Hazard Zone identified for the Hayward Fault, and includes areas where there is evidence of active faulting and where structures intended for human habitation should be avoided. The site also contains areas that are clear of active faulting and that are suitable for development, and the proposed Project has been designed to accommodate the constraints imposed by those fault traces. Subsequent design-level investigations and construction monitoring will ensure that the Project is constructed in a manner that conforms to all applicable codes regarding seismic safety. The risk of damage or other impacts from landslides is considered slight (less than significant) at the Project site.

- Approximately two-thirds of the Alternative 2 site is outside the Alquist-Priolo Zone, and one-third is within the Zone. Based on inferences from prior site investigations, there is a low to moderate probability of active faulting crossing this site. However, given the lack of reliable geotechnical information specific to this site, additional site investigations would be necessary to identify adequate safe building sites at this location to support a comparably sized and equipped replacement project, and such a project would also need to be designed to accommodate any constraints imposed by seismic hazards, as well as subsequent design-level investigations and construction monitoring to ensure that the project is constructed in a manner that conforms to all applicable codes regarding seismic safety (similar to the Project). Mitigation measures required of the Project (Measure Geology – 6.1, and Mitigation Measure Geology – 6.2) would also be required for Alternative 2. Additionally, the Alternative 2 site contains other geotechnical risks associated with the presence of dormant landslides uphill from that site that are not present at the Project site.

Construction-Related Effects

- The Project would result in temporary construction-period effects to existing sensitive receptors in the immediate vicinity. These effects include construction noise, dust, construction equipment emissions, and potential erosion and sedimentation during grading. Each of these impacts would be short-term effects, and can be mitigated to levels of less than significant through mitigation measures required of the Project.

- Alternative 2 would be further removed from existing sensitive receptors, and construction-period effects would have a lesser direct effect on surrounding neighbors. Construction-period impacts associated with Alternative 2 would be less than significant, but mitigation measures required of the Project would also be required for Alternative 2, particularly to address potential erosion and sedimentation during grading.

Aesthetics, Light and Glare

- The Project would add new sources of light that have the potential to increase night light levels at nearby residential uses. However, the design and performance criteria for the Project would minimize light and glare impacts on adjacent areas by using perimeter vine-covered fencing and landscaping, lighting fixtures that would be similar to those used in small-scale residential buildings, and shielding of light direction so as to reduce or eliminate off-site light or glare effects. To assure that an unacceptable level of light and glare not result from the project, the project would be required to implement Mitigation Measure Visual – 5.1, ensuring compliance with County lighting standards. Light and glare impacts would be less than significant.

- Alternative 2 would be further removed from existing neighbors, and would reduce visual change (including potential night lighting) as compared to the proposed Project.

On balance, the impacts of both the Project and Alternative 2 are similar (i.e., either less than significant, or able to be mitigated to a level of less than significant), with only marginal differences in the degree to which these effects approach the significance thresholds. Alternative 2 would avoid or substantially reduce aesthetic and construction-period impacts to nearby neighbors as compared to the Project, but the Project's aesthetics and construction-period effects would not be significant with implementation of required mitigation measures. The key difference between the Project and Alternative 2 is the certainty of known geologic hazards at the Project site, and the Project's layout which is specifically designed to address those geologic hazards; versus the uncertainty of potential geological hazards at the Alternative 2 site and therefore the lack of a precise design plan that can be known as being fully capable of appropriately addressing potential geologic hazards. Additional site investigations of the Alternative 2 site would be necessary to determine whether this site could provide seismically safe building sites, and such investigations have not been conducted. Because of the certainty of the design of the Project in addressing known geologic hazards, the Project is marginally environmentally superior to all other alternatives considered in this EIR.

17

GROWTH INDUCING AND CUMULATIVE IMPACTS

GROWTH-INDUCING IMPACTS

The proposed Camp Sweeney project is intended to address documented needs for improved facilities. The proposed Project would not induce population growth in the vicinity of the proposed site but would accommodate the existing and projected level of service required to meet the demands of the County over the next 20 years or more.

The development program for Camp Sweeney has been studied over the past several years, with the most recent program verification completed in 2015 by Komorous-Towey Architects. The program addresses the need for a facility with 120 beds in a 'camp like' environment conducive to achieving the rehabilitation and behavioral modification objectives of the County's Probation Department.

The development of the Project would be consistent with land use plans and policies for the area, in terms of density and intensity of use. The site is located in an urban area with adequate infrastructure to serve the demands for services, such as water and wastewater, so no substantial infrastructure improvements would be required which could lead to growth-inducement in neighboring areas.

Any additional employment needed to operate the proposed Project would be relatively small in number and small in comparison to the overall level of employment in the area. Employees would be drawn from the existing labor supply serving this County function, and limited new housing would be required to serve new employees. Considered in the context of Alameda County as a whole, and the community in which the project would be located, the Project does not represent the introduction of a large employment or economic generator. However, the overall trend in the region is toward increased traffic congestion, a lack of affordable housing, and increased service demands that could outstrip the ability of cities and other agencies to provide for all of the long-term growth within and beyond the nine-County San Francisco Bay Area. Therefore, there is the potential for significant cumulative growth-inducing impacts.

CUMULATIVE IMPACTS

"Cumulative impacts" refer to two or more individual effects which, when considered together, are considerable or which compound or increase other environmental impacts. The cumulative impact from several projects is the change in the environment which results from the incremental impact of the project when added to other closely related past, present and reasonably foreseeable probably future projects. Cumulative impacts can result from individually minor but collectively significant projects taking place over a period of time (CEQA Guidelines, Section 15355). Cumulative impacts need not be discussed in detail if the incremental effect of a Project would not be "cumulatively considerable" (CEQA Guidelines, Section 15130(a)). Cumulatively considerable means that the incremental effects of an individual project are considerable when viewed in connection with the probable effects of past

projects, the effects of other current projects, and the effects of probable future projects (CEQA Guidelines, Section 15065(c)). CEQA provides that, where significant cumulative effects may occur, the analysis may be based on a list of projects producing related cumulative impacts, or a summary of projections contained in an adopted general plan or related planning document or in a prior adopted environmental document that describes areawide conditions.

For purposes of this EIR, cumulative impacts have been assessed for the proposed Project, and the geographic scope of the area affected by the cumulative effect of the Project is the area surrounding the Fairmont Campus in the unincorporated part of Alameda County and the City of San Leandro.

Cumulative Development Concept

Demolition of the existing Camp Sweeney buildings and construction of the Replacement Project as proposed would occur on a site that has previously been developed and used for other purposes that are no longer operating or present.

In the early 2000s the Alameda County General Services Agency prepared a master plan of the Fairmont campus property to review opportunities and constraints of the site that could be utilized in meeting the County's long-term needs. The focus of the study was the health care facilities that have deteriorated and are located in close proximity to the Hayward fault zone. Although reuse or replacement of the existing Fairmont Campus buildings may occur, specific development projects and land uses for the existing Fairmont Hospital and other County-owned land comprising the Fairmont Campus area have not been identified. The master plan was never adopted officially and therefore it does not provide reliable guidance as to specific future uses or changes to the Campus site. As a consequence, any estimate of future development would be considered speculative.

Other past, present, and probable future development in the vicinity would be under the auspices of the City of San Leandro. The City's current General Plan was adopted in 2002 and is currently working on a 2035 General Plan Update. The City's General Plan addresses land use trends within the City and in the City's sphere of influence, which includes the Fairmont Campus area and the Hillcrest Knolls neighborhood. The General Plan acknowledges the County's land use plans for the area and identifies a need for continued cooperation in addressing neighborhood and commercial revitalization.

With respect to the single family residential Hillcrest Knolls area, the City's General Plan describes it as largely built out with only limited infill potential. Several other areas in San Leandro are considered ready for new development or redevelopment of existing conditions including the Bayfair area and East 14th Street corridor. Based upon the City's growth projections contained in the City's current General Plan, the changes anticipated in those districts would be substantially more intense than the proposed Camp Sweeney Replacement Project, but are anticipated to occur over a long period of time in incremental and flexible stages that cannot be forecast at this time, as much of this development would only be initiated during favorable economic conditions.

Current development activity in San Leandro is focused on the City's downtown area and near the BART station. Projects include Phase 1 of the San Leandro Tech Center, currently under construction, and the recent opening of the 21st Amendment craft brewery at the long-vacant Kellogg manufacturing facility. Also in the works is the first phase of a two-phase affordable housing development by BRIDGE Housing consisting of 115 units in phase 1 and an additional 85 units in phase 2. The City is also in the midst of a planning study of the Bayfair Mall and adjacent BART station area, seeking to improve circulation, parking and the overall retail experience at that commercial center.[1] Other current projects include

[1] Personal conversation with Tom Liao, Deputy Community Development Director, City of San Leandro, November 13, 2015.

redevelopment of the Shoreline Marina area at the edge of San Francisco Bay. All of the development activity in San Leandro is quite far removed from the Camp Sweeney site, is or has completed its own environmental review, and would not be considered as contributing to any cumulative environmental effects of the Project.

Potential Environmental Effects

Likely impacts from future development of the Fairmont Campus other than the proposed Camp Sweeney Replacement Project might include temporary noise and dust impacts associated with demolition and construction activity (which could be cumulatively significant, depending on the amount of construction activity taking place in the vicinity at the time), vehicular traffic and transit demand within the area, and air pollutant emissions associated with that traffic. Additional service demands on water and wastewater providers, storm drainage systems, electrical and gas service, and other infrastructure could result from redevelopment of the site. However, those demands would be partially offset by a decrease in activity from the demolition or reduced use of existing facilities.

The County has no plans to renew its efforts at preparing a Fairmont Campus Master Plan and therefore, possible future changes to the land uses within the Campus area cannot be forecasted and this EIR cannot make projections regarding the potential cumulative effect of new development in the Campus area that may occur in the future. Any such development would be subject to independent review and approval by the Board of Supervisors, including public notice and environmental impact assessment. Therefore, there are no cumulative impacts of other projects to be considered, and the Project's contribution would be limited to the direct effects of the Project as discussed in Chapters 4 through 16.

The implementation of individual projects in the immediate vicinity of the Fairmont Campus and elsewhere in the City of San Leandro would be subject to independent analysis by the City as they are proposed, and are dispersed over an area at least one-half mile away from the existing Camp Sweeney site. In the immediate vicinity of the site, limited or no development is anticipated.

Consequently, the project's incremental effects, in combination with the limited effects of anticipated/ reasonably foreseeable development in the immediate vicinity would not be considered cumulatively considerable.

18

REPORT PREPARATION

ENVIRONMENTAL IMPACT REPORT PREPARERS

This Draft Environmental Impact Report has been prepared for the County of Alameda, General Services Agency as Lead Agencies by Lamphier-Gregory in affiliation with TJKM Transportation Consultants, Illingworth & Rodkin, Inc., LSA Associates and Preservation Architecture.

Alameda County
Board of Supervisors
1221 Oak Street, Fifth Floor
Oakland, CA 94612
(510) 272-6347

General Services Agency
1401 Lakeside Drive, Suite 800
Oakland, CA 94612
(510) 208-9588
Maritza Delgadillo, Senior Project Manager

Office of the County Counsel
1221 Oak Street, Suite 450,
Oakland CA 94612
(510) 272-6700
Audrey A. Beaman, Assistant County Counsel

Community Development Agency - Planning Department
224 W. Winton Avenue, Room 110
Hayward, CA 94544
(510) 670-5400
Sonia Urzua, Senior Planner

Lamphier-Gregory
Prime Consultant
1944 Embarcadero
Oakland, CA 94606
(510) 535-6690
Nathaniel Taylor, Senior Planner (Principal Document Preparer)
Rebecca Auld, Senior Planner (Air Quality/GHG Analyses)

TJKM Transportation Consultants
Traffic, Parking, Transit
4305 Hacienda Dr., Suite 550,
Pleasanton, CA 94588
(925) 463-0611
Colin Burgett, Senior Project Manager

Illingworth & Rodkin, Inc.
Acoustical Analysis
1 Willowbrook Court, Suite 120
Petaluma, CA 94954
(707) 794-0400
Jared McDaniel, Acoustical Consultant

LSA Associates
Biological Resources
157 Park Place,
Pt. Richmond, CA 94801
(510) 236-6810
Ross Dobberteen, Ph. D., Principal
Tim Milliken, Certified Arborist
Dean Sidler, Senior Wildlife Biologist

Preservation Architecture
Historic Architecture
446 17th Street #302
Oakland 94612
(510) 418-0285
Mark Hulbert, Registered California Architect

BIBLIOGRAPHY

Introduction

County of Alameda, Draft Environmental Impact Statement & Environmental Impact Report, Juvenile Justice Facility and East County Hall of Justice Project, SCH# 2002012080. January 2003.

Project Description

Carter Goble Lee, Alameda County Juvenile Facilities Needs Assessment Final Report. December 11, 2008.

2007 Local Youthful Offender Rehabilitative Facility Construction Funding Program Proposal Form. January 5, 2009

Komorous-Towey Architects, Camp Wilmont Sweeney Replacement Project, Project Establishment Documents – Task 1. July 9, 2015.

Komorous-Towey Architects, Camp Wilmont Sweeney Replacement Project, Bridging Documents - Task 2, Appendix B, Administrative Review Set - No. 1. December 21, 2015

Land Use and Planning

Alameda County. Castro Valley Plan. 2012.

City of San Leandro. San Leandro General Plan. May, 2002.

Alameda County, Scenic Route Element of the General Plan, May 1966.

Aesthetics and Visual Quality

Komorous-Towey Architects. Camp Wilmont Sweeney Replacement Project, Project Establishment Documents – Task 1. July 9, 2015.

Alameda County, Castro Valley Plan, March 2012

Alameda County, Scenic Route Element of the General Plan, May 1966.

City of San Leandro, City of San Leandro General Plan – 2015 (Draft for Public Review).

Geology, Soils, and Seismicity

Kleinfelder, Supplemental Fault Investigation Proposed Camp Sweeney Rebuild 2400 Fairmont Drive San Leandro, California, November 7, 2014

_____, Preliminary Geotechnical Investigation Proposed Camp Sweeney Rebuild Supplemental Site 2400 Fairmont Drive San Leandro, California. November 14, 2014.

_____. Phase 3 Fault Investigation Proposed Camp Sweeney Rebuild 2400 Fairmont Drive, San Leandro, California. February 24, 2015.

_____. Final Geotechnical Investigation, Proposed Camp Sweeney Rebuild Supplemental Site 2400 Fairmont Drive San Leandro, California. December 9, 2015.

_____. Preliminary Geologic Assessment Existing Camp Sweeney Site 2400 Fairmont Drive, San Leandro, California. January 12, 2016

U.S. Geological Survey. 1999. Understanding Earthquake Hazards in the San Francisco Bay Region: Major Quake Likely to Strike Between 2000 and 2030. USGS Fact Sheet 152-99.

Hydrology and Water Quality

Kleinfelder. Preliminary Geotechnical Investigation Proposed Camp Sweeney Rebuild Supplemental Site 2400 Fairmont Drive San Leandro, California. November 14, 2014.

_____. Final Geotechnical Investigation, Proposed Camp Sweeney Rebuild Supplemental Site 2400 Fairmont Drive San Leandro, California. December 9, 2015.

Biological Resources

California Department of Fish and Game. Natural Communities List Arranged Alphabetically by Life Form. Biogeographic Data Branch, Vegetation Classification and Mapping Program. Available online at: www.dfg.ca.gov/biogeodata/vegcamp/pdfs/natcomlist.pdf (accessed July 2015). September, 2010.

California Department of Fish and Wildlife. 2015a. California Natural Diversity Database. Query of special-status species occurrences within 5 miles of the project site. Nongame Heritage Program, The Resources Agency, Sacramento, California. May 1, 2015.

_____. 2015b. Special Animals List. California Natural Diversity Database. October, 2015.

California Native Plant Society. Inventory of Rare and Endangered Plants (online edition, v7-10b). California Native Plant Society, Sacramento. Website: www.cnps.org/inventory. Accessed September 21, 2015.

Gilman, E. F. and S. J. Lilly. Best Management Practices, Tree Pruning. A companion publication to the ANSI A300 Part 1: Tree, Shrub, and Other Woody Plant Maintenance – Standard Practices, Pruning. Published by International Society of Arboriculture, Champagne, IL. 2002

LSA Associates, Inc. Tree Survey Report – Camp Sweeney, San Leandro, Alameda County, California. January 7, 2016

_____. Biological Assessment of Juvenile Justice Center Project Site in San Leandro, Alameda County. Prepared for Subsurface Consultants, Inc., Lafayette, California. November 29, 2000.

U. S. Fish and Wildlife Service. IPaC Trust Resource Report. Online species list, Sacramento Fish and Wildlife Office, Sacramento, California. Website: http://ecos.fws.gov/ipac/gettingStarted/map. Accessed September 21, 2015.

Transportation

Alameda Countywide Bicycle Plan. October 2012.

TJKM Transportation Consultants. Draft Traffic Impact Study. Camp Wilmont Sweeney Replacement Project. September 3, 2015.

Noise

California Department of Transportation. Technical Noise Supplement. September, 2013.

Harris, C.M. Handbook of Acoustical Measurements and Noise Control. 1998.

Illingworth & Rodkin 2015

Air Quality

Bay Area Air Quality Management District. Air Quality Standards and Attainment Status, May 28, 2015.

_____. Air Pollution Summaries. Website accessed at: http://www.baaqmd.gov/Divisions/Communications-and-Outreach/Air-Quality-in-the-Bay-Area/Air-Quality-Summaries.aspx.

_____. California Environmental Quality Act Air Quality Guidelines, May 2012.

_____. California Environmental Quality Act Air Quality Guidelines, Appendix C: Sample Air Quality Setting. May, 2012.

_____. Alameda Stationary Source Screening Analysis Tool. Website accessed at: http://www.baaqmd.gov/Divisions/Planning-and-Research/CEQA-GUIDELINES/Tools-and-Methodology.aspx. May, 2012.

_____. Source Inventory of Bay Area Greenhouse Gas Emissions. Website accessed at: http://www.baaqmd.gov/Divisions/Planning-and-Research/Emission-Inventory/Greenhouse-Gases.aspx. February, 2010.

Brekke, L.D., et al. "Climate Change Impacts Uncertainty for Water Resources in the San Joaquin River Basin, California." Journal of the American Water Resources Association. 40(2): 149–164. 2004.

California Air Resources Board. Public Workshop to Discuss Establishing the 1990 Emissions Level and the California 2020 Limit and Developing Regulations to Require Reporting of Greenhouse Gas Emissions. December, 2006.

California Climate Change Center. Our Changing Climate: Assessing the Risks to California, CEC- 500-2006-077. July, 2006.

California Energy Commission, Inventory of California Greenhouse Gas Emissions and Sinks: 1990 to 2009, December 2011.

Intergovernmental Panel on Climate Change. Climate Change 2007: Synthesis Report, Figure 2.1. November, 2007.

_____. Special Report on Emissions Scenarios, 2000, www.grida.no/climate/ipcc/emission/002.htm, accessed July 24, 2007.

Kiparsky, M. and P.H. Gleick. Climate Change and California Water Resources: A Survey and Summary of the Literature. July, 2003.

Parmesan, C. and H. Galbraith. Observed Impacts of Global Climate Change in the U.S. November, 2004.

U.S. EPA. Inventory of U.S. Greenhouse Gas Emissions and Sinks: 1990 – 2010, Table 2-1: Recent Trends in U.S. Greenhouse Gas Emissions and Sinks. April 15, 2012.

_____. 2010, Climate Change Indicators in the United States, p. 11. 2010.

Hazards and Hazardous Materials

RGA Environmental. Phase I Environmental Site Assessment. April, 2015.

Public Services

Alameda County. Castro Valley Plan. 2012.

Alameda County Waste Management Authority. Alameda County Source Reduction and Recycling Plan. Adopted by Alameda County Waste Management Authority (September 27, 2000) and Alameda County Source Reduction Board (June 8, 2000).

CalRecycle. Solid Waste Information System. Website accessed January 4, 2016 at: http://www.calrecycle.ca.gov/SWFacilities/Directory/01-AA-0009/Detail/.

City of San Leandro. San Leandro General Plan. May, 2002.

City of San Leandro. General Plan 2015: Draft for Public Review.

Utilities

Alameda County. Castro Valley Plan. 2012.

Cultural and Historical Resources

Archaeology in Alameda County: A Handbook for Planners 1976

Preservation Architecture, Camp Wilmont Sweeney, Alameda County, Historic Resource Evaluation, August 12, 2015.

19

ACRONYMS AND TERMS

ACRONYMS

AB	Assembly Bill
ACFD	Alameda County Fire Department
AC Transit	Alameda/Contra Costa Transit District
A-P Zone	Alquist – Priolo Earthquake Fault Zone
BAAQMD	Bay Area Air Quality Management District
BART	Bay Area Rapid Transit District
BMP	best management practice
CAAQS	California Ambient Air Quality Standards
California Register	California Register of Historical Resources
Camp Sweeney	Camp Wilmont Sweeney
CARB	California Air Resources Board
CBC	California Building Code
CCR	California Code of Regulations
CDFW	California Department of Fish and Wildlife
CEQA	California Environmental Quality Act
CFR	Code of Federal Regulations
CH_4	methane
CNDDB	California Natural Diversity Database
CNEL	community noise equivalent level
CNPS	California Native Plant Society
CO	carbon monoxide
CO_2	carbon dioxide
CO_2e	carbon dioxide equivalent
Corps	U.S. Army Corps of Engineers

County	Alameda County
CRPR	California Rare Plant Rank
dB	decibel
dBA	A-weighted decibel
DPM	diesel particulate matter
EBMUD	East Bay Municipal Utility District
EBRPD	East Bay Regional Park District
EIR	environmental impact report
EPA	U.S. Environmental Protection Agency
ESA	Endangered Species Act
GHG	greenhouse gas
gpd	gallons per day
gpm	gallons per minute
GSA	General Services Agency
GWP	global warming potential
Hz	hertz
LAFCO	Local Agency Formation Commission
L_{dn}	day-night noise level
LEED	Leadership in Energy and Environmental Design
L_{eq}	equivalent noise level
L_{max}	maximum A-weighted sound level
LOS	level of service
MBTA	Migratory Bird Treaty Act
mg/m^3	milligrams per cubic meter
N_2O	nitrous oxide
NAAQS	National Ambient Air Quality Standards
NAHC	Native American Heritage Commission
NHPA	National Historic Preservation Act
NOI	Notice of Intent
NOP	Notice of Preparation
NO_2	nitrogen dioxide
NO_x	nitrogen oxides
NPDES	National Pollution Discharge Elimination System

NRHP	National Register of Historic Places
OLSD	Oro Loma Sanitary District
$PM_{2.5}$	particulate matter 2.5 micrometers or less in diameter
PM_{10}	particulate matter 10 micrometers or less in diameter
ppm	parts per million
Project	Camp Sweeney Replacement Project
ROG	reactive organic gas
ROW	right-of-way
RWQCB	Regional Water Quality Control Board
SB	Senate Bill
SEMS	Standardized Emergency Management System
SF_6	sulfur hexaflouride
SIP	State Implementation Plan
SO_2	sulfur dioxide
SWPPP	Storm Water Pollution Prevention Plan
SWRCB	State Water Resources Control Board
TAC	toxic air contaminant
TPZ	tree protection zone
USC	United States Code
USD	Unified School District
USFWS	U.S. Fish and Wildlife Service
USGS	U.S. Geological Survey

TERMS

A-weighted decibel: Environmental noise is usually measured in A-weighted decibels (dBAs). A dBA is a decibel corrected for the variation in frequency response of the human ear at commonly encountered noise levels.

community noise equivalent level: The community noise Equivalent level is similar to the day-night noise level (or L_{dn}) except that it includes an approximate 5-dBA “penalty” for evening noise (7:00 p.m. to 10:00 p.m.) in addition to the 10-dBA “penalty” for nighttime noise.

day-night noise level: The day-night average noise level is based on human reaction to cumulative noise exposure over 24 hours. To calculate the L_{dn}, noise between 10:00 p.m. and 7:00 a.m. is weighted by adding 10 dBA to take into account the greater annoyance of nighttime noise.

decibel: The standard unit of noise measurement, which expresses the relative difference in energy between acoustic signals in terms of the common logarithm of the ratio between the signals. Ten units represent a doubling of acoustic energy.

environmental impact report: A document prepared by an agency pursuant to the California Environmental Quality Act that discloses the significant environmental impacts of a proposed project and that identifies alternatives to the project as well as measures to mitigate or avoid the impacts.

equivalent noise level: The equivalent steady-state sound level that, in a stated period, would contain the same acoustic energy as the actual time-varying sound level during the same period.

Greenhouse gases: Emissions such as CO_2, CH_4, N_2O, hydrofluorocarbons, perfluorocarbons, and SF_6 which to contribute to global warming.

Groundwater: All subsurface water (below soil/ground surface), distinct from surface water

Hazardous Material: A substance or combination of substances, that, because of quantity, concentration, or physical, chemical or infectious characteristics, may either: (1) cause or significantly contribute to an increase in mortality or an increase in serious, irreversible, or incapacitating, illness; or (2) pose a substantial present or potential hazard to human health or environment when improperly treated, stored, transported or disposed of, or otherwise managed

Hazardous Waste: Hazardous wastes are hazardous materials that no longer have practical use, such as substances that have been discarded, spilled, or contaminated, or that are being stored temporarily prior to proper disposal

LEED: A green building rating system developed by the U.S. Green Building Council.

Level-of-service standards: Describe the range of possible traffic conditions as represented by the letters A through F, with A being excellent and F being poor.

Mobile Source: Refers to a category of air pollutant emissions sources. This category includes those sources that routinely move from place to place. Examples include aircraft, automobiles, trucks, trains, ships, and bulldozers.

Stationary Source: Refers to a category of air pollutant emission sources This category includes those sources that routinely remain in one place Examples include power plants, boilers, and storage tanks

Wetlands: Wetlands as defined under the Clean Water Act (33 CFR 328 3[b]; 40 CFR 230 3[t]) are "…those areas that are inundated or saturated by surface or ground water at a frequency and duration sufficient to support, and that under normal circumstances do support, a prevalence of vegetation typically adapted for life in saturated soil conditions Wetlands generally include swamps, marshes, bogs, and similar areas "

DRAFT ENVIRONMENTAL IMPACT REPORT
FOR THE
CAMP SWEENEY REPLACEMENT PROJECT

SCH # 2015102054

APPENDICES

Appendix A: Notice of Preparation, Scoping Meeting Summary and Public Comments

Appendix B: Air Quality Modeling Results, Health Risk Screening Analysis and Greenhouse Gas and Climate Change Screening Analysis

Appendix C: Camp Wilmont Sweeney, Alameda County, Historic Resource Evaluation

Appendix D: Tree Survey Report, Camp Sweeney, San Leandro, California

Appendix E: Appendices to Transportation Impact Analysis, Level of Service Methodology and Turning Movement Count Data and Traffic Signal Timing Sheets

Appendix A

Notice of Preparation, Scoping Meeting Summary and Public Comments

Notice of Preparation of an Environmental Impact Report (EIR)
and
Notice of Public Scoping Meeting

Date:	October 15, 2015
Project Title:	Camp Sweeney Replacement Project
Location	2400 Fairmont Drive, San Leandro, CA 94578 Assessor's Parcel Numbers 080A-0238-003-00 and 080A-0238-004-00
Project Site:	±10 acres
Project Applicant& Lead Agency	Alameda County General Services Agency (GSA) 1401 Lakeside Drive, Suite 800 Oakland, CA 94612
Staff Contact:	Maritza Delgadillo, Senior Project Manager Alameda County GSA, Technical Services Division 510/208-9588 Maritza.Delgadillo@acgov.org

PROJECT DESCRIPTION:

Existing Program

Camp Wilmont Sweeney ("Camp Sweeney") is a minimum security residential program for adolescent males ranging in age from 15 to 18 who have been adjudicated by the Juvenile Court for minor non-violent criminal offenses and assigned to Camp Sweeney for a 6 to 12 month placement. The facility is administered by the Alameda County Probation Department in partnership with the Alameda County Office of Education, the Alameda County Health Care Services Agency, local community-based service providers and supportive volunteers. The overall goal is to return each minor to his community as a positive and productive citizen.

The existing Camp Sweeney facilities, originally built between 1957 and 1958, consist of four 1- story and one 2-story buildings that include an administration building, a dormitory, a kitchen and dining building, an educational classroom building and a multi-purpose recreation building.

Project Site and Surroundings

As shown in Figures 1 and 2 at the end of this Notice, the proposed site is located at 2400 Fairmont Drive, just off Highway 580 in unincorporated Alameda County, near the municipal boundary of the City of San Leandro, California. The site is within the County's 206-acre area Fairmont Campus, which is comprised of several health, social service and criminal justice facilities including the new Juvenile Justice Center ("JJC"), the Fairmont Hospital, the John George Psychiatric Hospital as well as the existing Camp Sweeney facilities.

The project would occupy an area along the western edge of the property, the location of the former Juvenile Hall and its associated parking lots. All the former facilities have been removed and the area is essentially open and clear of physical structures.

Across Fairmont Drive from the project site is the single-family residential neighborhood of Hillcrest Knolls, situated on the downhill slope, screened by mature trees and other planting. The Alameda

County Sheriff operates a large office building south of the project site and adjacent to the 580 freeway between 150th Avenue and Fairmont Drive.

Proposed Replacement Project

The Camp Sweeney Replacement Project ("Project") proposes to demolish the existing Camp Sweeney buildings and relocate the entire program from its current location to the southwest area of the Fairmont Campus. The Project would include seven new buildings including four dormitories, administration, food services (dining hall), gymnasium, and an academic building. The site plan also includes outdoor walkways, athletic fields and outdoor play areas. The new facilities would provide space for up to 120 adjudicated youth with dormitory-style beds for 64 adolescent males, 32 adolescent females and a secured 24-bed Realignment Unit. The Project would have two main areas: the Upper Field Area, which would be used for soccer and other outdoor activities, and the Campus Site, closer to Fairmont Drive, where all the new structures would be located.

Construction

To address soil and subsurface geologic conditions and mitigate the adverse effects associated with undocumented fill, all existing fill would be removed within building areas to a depth of 20 - 25 feet beneath the existing asphalt parking lots. The soil would be reconditioned and replaced consistent with engineering compaction criteria to achieve a seismically and geologically safe site to support the proposed buildings. Construction of the campus buildings would then begin and would extend over an approximately 24-month period. Construction activities, including truck traffic coming to and from the site would be restricted to daytime, weekday non-holiday hours of between 7:00 a.m. and 6:00 p.m.

Other Agencies Whose Approval is Required

Project approval involves a three-step process:

a) <u>County approval and certification of the EIR</u>

The Alameda County Board of Supervisors at a noticed public hearing will be asked to approve the Project and certify the EIR, thereby completing the environmental review process.

b) <u>Technical Approvals</u>.

Alameda County and its third party plan check and permit reviewers will internally provide clearance and sign-off on plans related to grading and site excavation, construction and structural plans, mechanical, electrical, plumbing and other plans and specifications, including compliance with the C.3 provisions of the Alameda County Clean Water Program. This step will include providing a Notice of Intent (NOI) to the San Francisco office of the Regional Water Quality Control Board (RWQCB).

c) <u>County of Alameda – Final Project Approval</u>

Implementation of the project through its final design and construction phases would involve on-going project management and oversight by the Alameda County GSA who will coordinate reviews and inspections by appropriate County agencies (e.g., Public Works Department, RWQCB) for compliance with adopted site grading, structural, electrical, mechanical, plumbing, building, drainage and clean water standards and requirements throughout the construction process.

ENVIRONMENTAL REVIEW

The Lead Agency has determined that an Environmental Impact Report will be prepared for compliance with the California Environmental Quality Act (CEQA). The EIR will evaluate relevant environmental conditions and will determine whether the Project would result in significant environmental impacts consistent with the requirements of CEQA and applicable significance criteria.

Notice of Preparation of an EIR for the Camp Sweeney Replacement Project

The EIR will focus on the following sensitive topic and resource areas: aesthetics, air quality (and related health risk), biological resources, cultural resources, geology/soils, hydrology/water quality and traffic. The EIR will also analyze alternatives to the proposed Project, will identify the environmentally superior alternative and will assess for potential growth-inducing and cumulative impacts. Mitigation measures or changes to the Project will be recommended in the EIR to avoid or reduce any identified significant environmental impacts to less-than-significant levels.

PUBLIC SCOPING PROCESS

A public scoping meeting will be held to receive oral comments concerning the scope of the EIR. The meeting will be held on:

Date: **Thursday, November 5, 2015**

Time: **6:00 p.m.**

Place: **224 W. Winton Avenue**
Public Hearing Room #160
Hayward, CA 94544.

Written comments can be submitted at this meeting and/or by mail, email, or fax until 5:00 p.m. on November 15, 2015.

Written comments should be sent to:

Maritza Delgadillo, Senior Project Manager
Alameda County GSA, Technical Services Division
510/208-9588
Maritza.Delgadillo@acgov.org

If you work for a Responsible or Trustee Agency, we need to know the views of your agency regarding the scope and content of the environmental information that is relevant to your agency's statutory responsibilities in connection with the proposed Project. Your agency may need to use the EIR when considering a permit or other approval for this Project. We will also need the name of the contact person for your agency.

10/14/15

Date

John Kitch for C. Judy

Caroline Judy, Acting Director, General Services Agency

Figure 1. Site Location

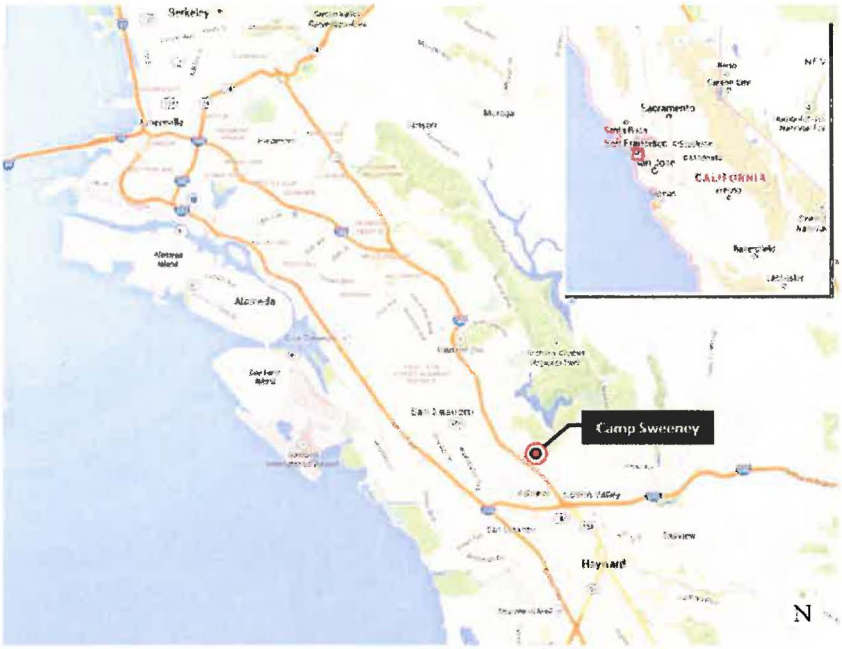

Figure 2. Project Site and Context

CAMP SWEENEY – EIR SCOPING MEETING SIGN-IN SHEET

Project:	Camp Sweeney Relocation Project	**Meeting Date:**	November 5, 2015
Facilitator:	General Services Agency	**Place/Room:**	224 W. Winton Ave, Room 160

Name	Title	Address	Phone		E-Mail
SZUDELSKI HENRYKA		2300 Upland Rd SL	510 357 3318		henrykaszudelski@gmail.com
SZUDELSKI YVONNE		2300 Upland Rd San Leandro	925 876 9316		iszudelski@gmail.com
Philip Denst		2219 Upland Rd SL	510 357-0378		denst@sbcglobal.net
Rona Rothenberg	Cap Program Mgr.	1401 Lakeside	510 208 9824		rona.rothenberg@acgov.org

Summary of Public Comments made at the EIR Scoping Meeting held November 5, 2015 at the County Planning Commission Hearing Room, 224 W. Winton Ave. Hayward

Speakers: [Names and contact information taken from the Sign-In sheet]

- Henryka Szudelski

  2300 Upland Road, San Leandro 510/357-3318 henrykaszudelski@gmail.com

- Yvonne Szudelski

  2300 Upland Road, San Leandro 925/876-9316 iszudelski@gmail.com

- Phillip Denst

  229 Upland Road, San Leandro 510/357-0378 denst@sbcgobal.net

- OTHER MALE – DID NOT GET HIS NAME AND HE DID NOT SIGN IN

Comments

The 4 members of the public who attended are neighbors who live in Hillcrest Knolls. Following are the environmental issues of concern to them:

1. Light and glare – The lights at the new JJC are very bright and they are concerned that night lighting at the new CS campus will be similar but closer to them and therefore a significant impact.

2. Noise – Noise from construction and operation will adversely impact them given the site's proximity to the HK neighborhood.

3. Geotech and Seismic Risks – neighbors are well aware that the Hayward Fault runs through the site and even that the AP zone extends slightly into the HK neighborhood; they question the validity of the plan to place the new CS buildings as proposed and they question why the proposed site would be any better than the existing CS site in regards to seismic hazards.

   They also questioned whether, given the heightened level of seismic hazard risk at the proposed site, whether the costs to construct the new CS campus would be higher than if located farther from an active fault.

4. Traffic – there wasn't much said about traffic – did not seem to be a major concern.

5. Project Need. The audience questioned the need for the project. They cited known facts that the population at the JJC is substantially less than its design capacity (like 120 vs 350) and that existing CS, which has a theoretical capacity of 100 boys was programmatically scaled back to 60 by order of the Board of Supervisors and even so there are only about 22 boys there at present; if the level of juvenile offenders who would populate CS is on a lowering trend line why is the new facility designed to accommodate 120?

6. Visual - Neighbors felt the new campus buildings, sited immediately adjacent to Fairmont Drive, as proposed, will be a visual blight, would adversely affect property values in the HK neighborhood.

7. Alternatives – Neighbors want the EIR to seriously consider alternatives that would either retain the existing CS campus as is, use the existing CS campus as the site for replacement buildings, or

find another site for a new CS campus, either within the Fairmont Campus or somewhere off site – basically, anywhere other than the proposed site.

8. Land Use – Neighbors see the proposed new CS campus as an undesirable land use (sometimes known as a LULU which stands for Locally Undesirable Land Use) and a conflict with the peaceful enjoyment of their status quo, increasing the possibility of criminal activity encroaching into their neighborhood, creating a land use conflict.

STATE OF CALIFORNIA

Governor's Office of Planning and Research

State Clearinghouse and Planning Unit

Edmund G. Brown Jr.
Governor

Ken Alex
Director

Notice of Preparation

October 19, 2015

RECEIVED
COUNTY OF ALAMEDA
OCT 22 2015
GSA - TECHNICAL SERVICES DEPARTMENT
DESIGN AND CONSTRUCTION

To: Reviewing Agencies

Re: Camp Sweeney Replacement Project
SCH# 2015102054

Attached for your review and comment is the Notice of Preparation (NOP) for the Camp Sweeney Replacement Project draft Environmental Impact Report (EIR).

Responsible agencies must transmit their comments on the scope and content of the NOP, focusing on specific information related to their own statutory responsibility, within 30 days of receipt of the NOP from the Lead Agency. This is a courtesy notice provided by the State Clearinghouse with a reminder for you to comment in a timely manner. We encourage other agencies to also respond to this notice and express their concerns early in the environmental review process.

Please direct your comments to:

Martiza Delgadillo
Alameda County General Service Agency
1401 Lakeside Drive, Suite 800
Oakland, CA 94612

with a copy to the State Clearinghouse in the Office of Planning and Research. Please refer to the SCH number noted above in all correspondence concerning this project.

If you have any questions about the environmental document review process, please call the State Clearinghouse at (916) 445-0613.

Sincerely,

Scott Morgan
Director, State Clearinghouse

Attachments
cc: Lead Agency

1400 TENTH STREET P.O. BOX 3044 SACRAMENTO, CALIFORNIA 95812-3044
TEL (916) 445-0613 FAX (916) 323-3018 www.opr.ca.gov

Document Details Report
State Clearinghouse Data Base

SCH# 2015102054
Project Title Camp Sweeney Replacement Project
Lead Agency Alameda County

Type NOP Notice of Preparation

Description The proposed site is located at 2400 Fairmont Drive, in unincorporated Alameda County, near the municipal boundary of the City of San Leandro, CA. The project proposes to demolish the existing Camp Sweeney buildings and relocate the project on a different part of the County-owned property. The new facility would contain seven new buildings to provide housing, education, and recreation to both male and female adjudicated youth.

Lead Agency Contact

Name Martiza Delgadillo
Agency Alameda County General Service Agency
Phone 510 208 9588 **Fax**
email
Address 1401 Lakeside Drive, Suite 800
City Oakland **State** CA **Zip** 94612

Project Location

County Alameda
City San Leandro
Region
Cross Streets Fairmont Drive / Foothill
Lat / Long 37° 7.15' .63" N / 122° 1.21' 6.99" W
Parcel No. 80A-238-4 and 80A-238-3
Township **Range** **Section** **Base**

Proximity to:

Highways Hwy 580
Airports Oakland
Railways No
Waterways San Leandro Creek
Schools San Leandro HS
Land Use Vacant. Public Facilities

Project Issues Aesthetic/Visual; Air Quality; Archaeologic-Historic; Biological Resources; Geologic/Seismic; Soil Erosion/Compaction/Grading; Traffic/Circulation; Water Quality

Reviewing Agencies Resources Agency; Department of Parks and Recreation; Resources, Recycling and Recovery; Department of Water Resources; Department of Fish and Wildlife, Region 3; Native American Heritage Commission; California Highway Patrol; Caltrans, District 4; Air Resources Board; Regional Water Quality Control Board, Region 2

Date Received 10/19/2015 **Start of Review** 10/19/2015 **End of Review** 11/17/2015

Note: Blanks in data fields result from insufficient information provided by lead agency.

Notice of Completion & Environmental Document Transmittal

Mail to: State Clearinghouse, P.O. Box 3044, Sacramento, CA 95812-3044 (916) 445-0613
For Hand Delivery/Street Address: 1400 Tenth Street, Sacramento, CA 95814

SCH # 2015102054

Project Title: Camp Sweeney Replacement Project

Lead Agency: Alameda County General Services Agency
Contact Person: Martiza Delgadillo
Mailing Address: 1401 Lakeside Drive, Suite 800
Phone: 510208-9588
City: Oakland
Zip: 94612
County: Alameda

Project Location: County: Alameda
City/Nearest Community: San Leandro
Cross Streets: Fairmont Drive / Foothill
Zip Code: 94578
Longitude/Latitude (degrees, minutes and seconds): 122 ° 121 ' 699 " N / 37 ° 715 ' 063 " W
Total Acres: 10
Assessor's Parcel No.: 80A-238-4 & 80A-238-3
Section: ____ Twp.: ____ Range: ____ Base: ____
Within 2 Miles: State Hwy #: 580
Waterways: San Leandro Creek
Airports: Oakland
Railways: none
Schools: San Leandro High Scho

RECEIVED
STATE CLEARINGHOUSE

Document Type:

CEQA:
- [x] NOP
- [ ] Early Cons
- [ ] Neg Dec
- [ ] Mit Neg Dec
- [ ] Draft EIR
- [ ] Supplement/Subsequent EIR (Prior SCH No.) ____
- Other: ____

NEPA:
- [ ] NOI
- [ ] EA
- [ ] Draft EIS
- [ ] FONSI

Other:
- [ ] Joint Document
- [ ] Final Document
- [ ] Other: ____

Local Action Type:

- [ ] General Plan Update
- [ ] General Plan Amendment
- [ ] General Plan Element
- [ ] Community Plan
- [ ] Specific Plan
- [ ] Master Plan
- [ ] Planned Unit Development
- [x] Site Plan
- [ ] Rezone
- [ ] Prezone
- [ ] Use Permit
- [ ] Land Division (Subdivision, etc.)
- [ ] Annexation
- [ ] Redevelopment
- [ ] Coastal Permit
- [ ] Other: ____

Development Type:

- [ ] Residential: Units ____ Acres ____
- [ ] Office: Sq.ft. ____ Acres ____ Employees ____
- [ ] Commercial: Sq.ft. ____ Acres ____ Employees ____
- [ ] Industrial: Sq.ft. ____ Acres ____ Employees ____
- [ ] Educational: ____
- [ ] Recreational: ____
- [ ] Water Facilities: Type ____ MGD ____
- [ ] Transportation: Type ____
- [ ] Mining: Mineral ____
- [ ] Power: Type ____ MW ____
- [ ] Waste Treatment: Type ____ MGD ____
- [ ] Hazardous Waste: Type ____
- [x] Other: youth correctional facility

Project Issues Discussed in Document:

- [x] Aesthetic/Visual
- [ ] Agricultural Land
- [x] Air Quality
- [x] Archeological/Historical
- [x] Biological Resources
- [ ] Coastal Zone
- [ ] Drainage/Absorption
- [ ] Economic/Jobs
- [ ] Fiscal
- [ ] Flood Plain/Flooding
- [ ] Forest Land/Fire Hazard
- [x] Geologic/Seismic
- [ ] Minerals
- [ ] Noise
- [ ] Population/Housing Balance
- [ ] Public Services/Facilities
- [ ] Recreation/Parks
- [ ] Schools/Universities
- [ ] Septic Systems
- [ ] Sewer Capacity
- [x] Soil Erosion/Compaction/Grading
- [ ] Solid Waste
- [ ] Toxic/Hazardous
- [x] Traffic/Circulation
- [ ] Vegetation
- [x] Water Quality
- [ ] Water Supply/Groundwater
- [ ] Wetland/Riparian
- [ ] Growth Inducement
- [ ] Land Use
- [ ] Cumulative Effects
- [ ] Other: ____

Present Land Use/Zoning/General Plan Designation:

Vacant. Public Facilities

Project Description: *(please use a separate page if necessary)*

The proposed site is located at 2400 Fairmont Drive, in unincorporated Alameda County, near the municipal boundary of the City of San Leandro, California. The project proposes to demolish the existing Camp Sweeney buildings and relocate the project on a different part of the County-owned property. The new facility would contain seven new buildings to provide housing, education, and recreration to both male and female adjudicated youth.

Note: The State Clearinghouse will assign identification numbers for all new projects. If a SCH number already exists for a project (e.g. Notice of Preparation or previous draft document) please fill in.

NOP Distribution List

JB

County: Alameda

SCH# 2015102054

Resources Agency

- [x] **Resources Agency**
  Nadell Gayou
- [ ] **Dept. of Boating & Waterways**
  Denise Peterson
- [ ] **California Coastal Commission**
  Elizabeth A. Fuchs
- [ ] **Colorado River Board**
  Lisa Johansen
- [ ] **Dept. of Conservation**
  Elizabeth Carpenter
- [ ] **California Energy Commission**
  Eric Knight
- [ ] **Cal Fire**
  Dan Foster
- [ ] **Central Valley Flood Protection Board**
  James Herota
- [ ] **Office of Historic Preservation**
  Ron Parsons
- [x] **Dept of Parks & Recreation**
  Environmental Stewardship Section
- [x] **California Department of Resources, Recycling & Recovery**
  Sue O'Leary
- [ ] **S.F. Bay Conservation & Dev't. Comm.**
  Steve McAdam
- [x] **Dept. of Water Resources**
  Resources Agency
  Nadell Gayou

Fish and Game

- [ ] **Depart. of Fish & Wildlife**
  Scott Flint
  Environmental Services Division
- [ ] **Fish & Wildlife Region 1**
  Curt Babcock
- [ ] **Fish & Wildlife Region 1E**
  Laurie Harnsberger
- [ ] **Fish & Wildlife Region 2**
  Jeff Drongesen
- [x] **Fish & Wildlife Region 3**
  Charles Armor
- [ ] **Fish & Wildlife Region 4**
  Julie Vance
- [ ] **Fish & Wildlife Region 5**
  Leslie Newton-Reed
  Habitat Conservation Program
- [ ] **Fish & Wildlife Region 6**
  Tiffany Ellis
  Habitat Conservation Program
- [ ] **Fish & Wildlife Region 6 I/M**
  Heidi Calvert
  Inyo/Mono, Habitat Conservation Program
- [ ] **Dept. of Fish & Wildlife M**
  George Isaac
  Marine Region

Other Departments

- [ ] **Food & Agriculture**
  Sandra Schubert
  Dept. of Food and Agriculture
- [ ] **Depart. of General Services**
  Public School Construction
- [ ] **Dept. of General Services**
  Anna Garbeff
  Environmental Services Section
- [ ] **Delta Stewardship Council**
  Kevan Samsam
- [ ] **Housing & Comm. Dev.**
  CEQA Coordinator
  Housing Policy Division

Independent Commissions,Boards

- [ ] **Delta Protection Commission**
  Michael Machado
- [ ] **OES (Office of Emergency Services)**
  Marcia Scully
- [x] **Native American Heritage Comm.**
  Debbie Treadway
- [ ] **Public Utilities Commission**
  Supervisor
- [ ] **Santa Monica Bay Restoration**
  Guangyu Wang
- [ ] **State Lands Commission**
  Jennifer Deleong
- [ ] **Tahoe Regional Planning Agency (TRPA)**
  Cherry Jacques

Cal State Transportation Agency CalSTA

- [ ] **Caltrans - Division of Aeronautics**
  Philip Crimmins
- [ ] **Caltrans – Planning HQ LD-IGR**
  Terri Pencovic
- [x] **California Highway Patrol**
  Suzann Ikeuchi
  Office of Special Projects

Dept. of Transportation

- [ ] **Caltrans, District 1**
  Rex Jackman
- [ ] **Caltrans, District 2**
  Marcelino Gonzalez
- [ ] **Caltrans, District 3**
  Eric Federicks – South
  Susan Zanchi - North
- [x] **Caltrans, District 4**
  Patricia Maurice
- [ ] **Caltrans, District 5**
  Larry Newland
- [ ] **Caltrans, District 6**
  Michael Navarro
- [ ] **Caltrans, District 7**
  Dianna Watson
- [ ] **Caltrans, District 8**
  Mark Roberts
- [ ] **Caltrans, District 9**
  Gayle Rosander
- [ ] **Caltrans, District 10**
  Tom Dumas
- [ ] **Caltrans, District 11**
  Jacob Armstrong
- [ ] **Caltrans, District 12**
  Maureen El Harake

Cal EPA

Air Resources Board

- [x] All Other Projects
  Cathi Slaminski
  - [ ] Transportation Projects
    Nesamani Kalandiyur
  - [ ] Industrial/Energy Projects
    Mike Tollstrup
- [ ] **State Water Resources Control Board**
  Regional Programs Unit
  Division of Financial Assistance
- [ ] **State Water Resources Control Board**
  Karen Larsen
  Division of Drinking Water
- [ ] **State Water Resources Control Board**
  Student Intern, 401 Water Quality Certification Unit
  Division of Water Quality
- [ ] **State Water Resouces Control Board**
  Phil Crader
  Division of Water Rights
- [ ] **Dept. of Toxic Substances Control**
  CEQA Tracking Center
- [ ] **Department of Pesticide Regulation**
  CEQA Coordinator

Regional Water Quality Control Board (RWQCB)

- [ ] **RWQCB 1**
  Cathleen Hudson
  North Coast Region (1)
- [x] **RWQCB 2**
  Environmental Document Coordinator
  San Francisco Bay Region (2)
- [ ] **RWQCB 3**
  Central Coast Region (3)
- [ ] **RWQCB 4**
  Teresa Rodgers
  Los Angeles Region (4)
- [ ] **RWQCB 5S**
  Central Valley Region (5)
  - [ ] **RWQCB 5F**
    Central Valley Region (5)
    Fresno Branch Office
  - [ ] **RWQCB 5R**
    Central Valley Region (5)
    Redding Branch Office
- [ ] **RWQCB 6**
  Lahontan Region (6)
  - [ ] **RWQCB 6V**
    Lahontan Region (6)
    Victorville Branch Office
- [ ] **RWQCB 7**
  Colorado River Basin Region (7)
- [ ] **RWQCB 8**
  Santa Ana Region (8)
- [ ] **RWQCB 9**
  San Diego Region (9)

- [ ] **Other** _____
  _____
  _____
- [ ] _____
  Conservancy

Last Updated 6/23/2015

From: Dan Bellino [mailto:dbellino@acoe.org]
Sent: Tuesday, November 17, 2015 8:39 PM
To: Delgadillo, Maritza GSA- Technical Services Department
Cc: Monica Vaughan
Subject: AC Board of Ed Approval for Camp Sweeney Replacement

Dear Ms. Delgadillo,

Upon reading the attached notice, ACOE staff noticed that it should include the Alameda County Board of Education's statutory responsibilities, under California Education Code section 48645.6, to approve any plans for juvenile court school classrooms or juvenile camps.

California Education Code 48645.6: Plans for any juvenile court school classrooms, offices, or any other school structures in any juvenile hall, juvenile home, day center, juvenile ranch, or juvenile camp shall be approved by the county board of education. Upon approval of the board of supervisors and the county board of education, the cost of such structures shall be a required charge against the funds of the county.

Please confirm revision of the approving agencies or let us know if there are any questions or concerns that we can assist with. Monica Vaughan, ACOE's Chief of Schools, is cc'd here.

Sincerely,
Dan

Daniel R. Bellino
Chief of Staff
510-670-4200
ALAMEDA COUNTY
OFFICE OF EDUCATION
313 West Winton Ave. Hayward, CA 94544
www.acoe.org
Facebook.com/AlamedaCOE Twitter.com/AlamedaCOE

DEPARTMENT OF TRANSPORTATION
DISTRICT 4
P.O. BOX 23660
OAKLAND, CA 94623-0660
PHONE (510) 286-5528
FAX (510) 286-5559
TTY 711
www.dot.ca.gov

Serious Drought.
Help save water!

November 16, 2015

ALA580891
ALA-580-32.98
SCH # 2015102054

Ms. Martiza Delgadillo
Alameda County
General Services Agency
1401 Lakeside Drive, Suite 800
Oakland, CA 94612

Camp Sweeney Replacement Project – Notice of Preparation

Dear Ms. Delgadillo:

Thank you for including the California Department of Transportation (Caltrans) in the environmental review process for the Camp Sweeney Replacement Project. Caltrans' new mission, vision, and goals signal a modernization of our approach to California's transportation system, in which we seek to reduce statewide Vehicle Miles Traveled (VMT) and increase non-auto modes of active transportation. Our comments seek to promote the State's smart mobility goals and are based on the Notice of Preparation.

Project Understanding
The proposed project would demolish and relocate the Camp Sweeney Juvenile Justice Center to another location on the County-owned parcel located at 2400 Fairmont Drive. The proposed facility for the adjudicated youth would be comprised of seven new buildings that would include four dormitories, an administration building, a dining hall, gymnasium and an academic building. The facilities would have a capacity to house 120 individuals.

Project site access would be gained via Fairmont drive, which then connect to Interstate (I-) 580 ramps located approximately 1.2 miles away. Construction truck traffic would be restricted to weekday non-holiday hours between 7:00 A.M. and 6:00 P.M. and would occur during an anticipated 24 month period.

Traffic Analysis
Please ensure that the environmental document evaluates the proposed project's impact on I-580 during operations and construction periods. We recommend using Caltrans' *Guide for the Preparation of Traffic Impact Studies* for determining which scenarios and methodologies to use in the analysis. The guide can be accessed from the following webpage:

The criteria listed below should be used in determining if a traffic analysis is warranted. If the proposed project will not generate the amount of trips needed to meet Caltrans' trip generation thresholds, an explanation of how this conclusion was reached must be provided.

- The project would generate 100 peak hour trips assigned to a State Highway System (SHS);
- The project would generate 50 to 100 peak hour trips assigned to a State highway facility, and the affected highway facilities are experiencing a noticeable delay; approaching unstable traffic flow (level of service (LOS) "C" or "D") conditions; or
- The project would generate 1 to 49 peak hour trips assigned to a State highway facility, and the affected highway facilities are experiencing significant delay; unstable or forced traffic flow (LOS "E" or "F") conditions.

Should you have any questions regarding this letter or require additional information, please contact Cole Iwamasa at (510) 286-5534 or cole.iwamasa@dot.ca.gov.

Sincerely,

Pat C.

PATRICIA MAURICE
District Branch Chief
Local Development - Intergovernmental Review

bcc:PMaurice/CIwamasa/ChronFile

CAMP SWEENEY REPLACEMENT PROJECT

Public EIR Scoping Meeting
November 5, 2015 6:00 P.M.
Alameda County Planning Commission Meeting Room
224 W. Winton Avenue
Hayward, California

RECEIVED
COUNTY OF ALAMEDA
NOV 16 2015
DESIGN AND CONSTRUCTION

Comment Sheet

Name Christopher Scott

Address: 14767 VAN AVE SL. CA 94579

Email: CSCOTT.MBA.CS@gmail.com

☐ ADD ME TO THE MAILING LIST

What potential environmental issues and impacts would you like addressed in the Environmental Impact Report? (Please be as specific as possible)

Regarding environment: two impacts relocation of white owl + California condor. Both bird were impacted when the existing building and grounds were built. Further escavation + building would deplete needed environment of these birds.

Community impact: This facility is less than 50% occupied + less than 28% utilized. We should spend this money on improving the existing training + development programs to reduce Repeat offenders. Our tax money needs to be spent on more counseling, training, education and treatment.

I am against Camp Sweeney & any building or relocation

Comments can be sent to:

Maritza Delgadillo, Senior Project Manager
Alameda County General Services Agency (GSA), Technical Services Division
1401 Lakeside Drive, Suite 800
Oakland, CA 94612
Maritza.delgadillo@acgov.org

CAMP SWEENEY REPLACEMENT PROJECT

Public EIR Scoping Meeting
November 5, 2015 6:00 P.M.
Alameda County Planning Commission Meeting Room
224 W. Winton Avenue
Hayward, California

NOV 10 2015

Comment Sheet

Name Donnalea Puckeylow

Address: 14721 VAN AVE San Leandro CA. 94578

~~Email:~~ First row of homes on West side near Juvenile Bld.

☐ ADD ME TO THE MAILING LIST

What potential environmental issues and impacts would you like addressed in the Environmental Impact Report? (Please be as specific as possible)

The Reparation Area on West side of area you intend to BUILD ON. Alameda County representatives gave speeches before last Juvenile Hall was built saying "No dust or damage to reparation area".
Keep water trks on job to keep dust down.

I do not want outside hollering on soccer fields - Sorry. A car and Bus parking area that close to home is noisy.

Comments can be sent to:

Maritza Delgadillo, Senior Project Manager
Alameda County General Services Agency (GSA), Technical Services Division
1401 Lakeside Drive, Suite 800
Oakland, CA 94612
Maritza.delgadillo@acgov.org

CAMP SWEENY REPLACEMENT PROJECT

Public EIR Scoping Meeting
November 5, 2015, 6:00 PM.
Alameda County Planning Commission Meeting Room
224 W. Winton Avenue
Hayward, California

Comment Sheet

Name: MARLENE FRIEDLANDER

Address: 14755 VAN AVENUE, SAN LEANDRO, CA 94578

Email: marlenemaria05@live.com

☑ ADD ME TO THE MAILING LIST – I did not receive the Notice in the mail.

What potential environmental issues and impacts would you like addressed in the Environmental Impact Report? (Please be as specific as possible)

My main concert is safety, of course. Even though the County claims that those teen-agers are non violent, there is no guarantee that in the future things are not going to change. By this I mean that for now the decision has been made to house non-violent kids only, but later that decision may be modified to include violent kids. I'm afraid some escapee(s) may commit serious crimes in the nearby residential areas. Even if they were not violent, I don't want my house be burglarized.

During the construction period there will be noise, dust and some other toxic elements that the wind will blow over our neighborhood causing respiratory problems.

The Fairmont Region is known for being habitat for deer, foxes, coyotes, turkeys and lizards, snakes, and some endangered creatures like salamanders.

Please reconsider your decision and the effect that the construction of this facility will have on the Hillcrest Knowls residents and the environment. Thank you.

Comment can be sent to:
Maritza Delgadillo, Senior Project Manager
Alameda County General Services Agency (GSA). Technical Services Division
1401 Lakeside Drive, Suite 800
Oakland, CA 94612
Maritza.delgadillo@acgov.org

RECEIVED
COUNTY OF ALAMEDA
NOV 10 2015

Gmail

Henryka Szudelski <henrykaszudelski@gmail.com>

November 5th meeting

1 message

Henryka Szudelski <henrykaszudelski@gmail.com> Mon, Nov 9, 2015 at 12:03 PM
To: maritza.delgadillo@acgov.org
Bcc: Henryka Szudelski <henrykaszudelski@gmail.com>

Dear Maritza and others,

Thank you for you outline of the proposed Camp Sweeney relocation. It was an informative meeting and I am glad I came.

After our meeting I checked back with my source at JJC who sends kids to Camp Sweeney and had a few things confirmed:
a) that the current camp is adequate
b) that it is being barely occupied with lots of vacancies
c) that it does not make sense to spend the money and build a new camp twice the size of the current one while the current one is half vacant

Since this is not a "heard through the grape vine" type of thing, speculation or a second hand information and it is coming from the horse's mouth I tend to believe it.
My question is : Why are we doing this? Why are we spending public money for a project we don't need?

This strategy can't possibly be County's solution for some of the on going disrepair issues and deferred maintenance problems that were mentioned at the meeting, can it? There is a remedy for things like that and it is called rehabbing the structure. Having spent a better part of my business career in facility maintenance, building and rehabbing a few houses, I know that a 50 year old structure isn't too old for that and can be rehabbed for a fraction of what it would cost to build one. My own house in Hillcrest Knolls is older than that and while it was dilapidated and inhabitable when I got it, it is perfectly comfortable after the facelift, which was a lot cheaper than building a new one. So the argument that the camp has to be rebuilt and relocated because of disrepair does not hold water. To spend tens of millions of taxpayers money to pursue a questionable project when there is an easier, softer and cheaper way, is not being a good steward of public funds to say the least.

First let's start with some facts. The camp is a minimum security prison for non violent juvenile offenders, that were sentenced there for committing a crime and no amount of language "lipstick" will turn it into a boys and girls scouts camp with maybe a little behavior problem. Granted, because of their age and perceived absence of notoriety they have a privilege of getting counseling, education and treatment while at the camp with the intention of getting them on a straight and narrow and back into the community. And rightfully so, but let's not forget that they are juvenile criminals with ideas in their minds, and while some of them stay and adjust, a number of them run away and end up in our neighborhoods causing trouble.
For that reason the camp's location needs to be remote and out of the proximity to the residential areas, which is the case now, with the current location of Camp Sweeney. In fact the current location is actually perfect. Why not keep it, even if the county must rebuild, to do it in the current location. This location is remote, not visible to the public, distant enough not to be heard and far from residential areas. Moving the camp to the edge of Fairmont Drive makes for a very nervous community of Hillcrest Knolls, that only encounters these escapees on occasion now , but would see those incidents increase many fold if we had the camp across the street. This is not acceptable. The proposed camp relocation to the Fairmont Drive is a bad choice. It is too close to Hillcrest Knolls. In fact anywhere along Fairmont Drive between JJC and John George is too close to our neighborhood.
Increased crime is only one problem we see coming with the proposed project. There are more. Seven buildings ,a sports field and associated play areas make for a large campus that can be seen, heard and

recognized for what it is, a detention center, from afar. With this comes noise, pollution, traffic, excessive night illumination and bad reputation.
We already have enough of that with JJC up the hill and John George nearby. These two are not reputable neighbors. We don't need the third one.
Nobody wants to live across the street from jail, prison, mental institution or detention camp. These are houses of ill repute.The mere awareness that one lives in close proximity to prisons and institutions and looks at them everyday, brings sadness and unease They don't bring joy and relaxation, something we seek to have when we get home. We rather look at the grassy field across the street than see the activities of the juveniles in the camp or hear their soccer games. Our homes are our places of repose when we need to get restored for the next day and not aggravated.
Just put yourself in our shoes for a moment and feel how it would be for you to be in our situation. Would you like this camp near your house? We are human beings here who have feelings, not any different than you, but people just like you that wish to have some peace and safety in their homes and neighborhoods. Please, hear us. We are the environment. We are the endangered specie that needs to be protected. Most people in this neighborhood are older people, with their main asset being their home.
What happens to the home values when the bad neighbor, like detention center you propose, moves in? The values go down. You would not want that to happen to you, would you?
So please, find another location for your camp, somewhere deep in the belly of the land back there or somewhere up above JJC ,behind the building where it can blend with JJC and form one campus , or somewhere else, but away from our neighborhood.
We would welcome some hiking trails, tennis courts or a Trader Joe's, meditation center instead , nice neighbors , so our lives could be enhanced not diminished. After all we are the law abiding, hard working, tax paying citizens. It is us that need to be cultivated, not the criminals.

The last but not least concern we have is the sincerity of the County to hear our voices. We are noticing a lot of action in the proposed area with sections of it being fenced off and dirt being brought in as if decisions have already been made and the evaluation process we are going through is just a dog and pony show to satisfy the letter of the law.
Hope I am wrong on this and that our voices are heard and our lives matter to you and your new plans will reflect that.

Please, pass this on to other parties.

Respectfully

Henryka Szudelski
Hillcrest Knolls
2300 Upland Rd

From: Henryka Szudelski [mailto:henrykaszudelski@gmail.com]
Sent: Monday, November 09, 2015 12:03 PM
To: Delgadillo, Maritza GSA- Technical Services Department
Subject: November 5th meeting

Dear Maritza and others,

Thank you for you outline of the proposed Camp Sweeney relocation. It was an informative meeting and I am glad I came.

After our meeting I checked back with my source at JJC who sends kids to Camp Sweeney and had a few things confirmed:
a) that the current camp is adequate
b) that it is being barely occupied with lots of vacancies
c) that it does not make sense to spend the money and build a new camp twice the size of the current one while the current one is half vacant

Since this is not a "heard through the grape vine" type of thing, speculation or a second hand information and it is coming from the horse's mouth I tend to believe it.
My question is : Why are we doing this? Why are we spending public money for a project we don't need?

This strategy can't possibly be County's solution for some of the on going disrepair issues and deferred maintenance problems that were mentioned at the meeting, can it? There is a remedy for things like that and it is called rehabbing the structure. Having spent a better part of my business career in facility maintenance, building and rehabbing a few houses, I know that a 50 year old structure isn't too old for that and can be rehabbed for a fraction of what it would cost to build one. My own house in Hillcrest Knolls is older than that and while it was dilapidated and inhabitable when I got it, it is perfectly comfortable after the facelift, which was a lot cheaper than building a new one. So the argument that the camp has to be rebuilt and relocated because of disrepair does not hold water. To spend tens of millions of taxpayers money to pursue a questionable project when there is an easier, softer and cheaper way, is not being a good steward of public funds to say the least.

First let's start with some facts. The camp is a minimum security prison for non violent juvenile offenders, that were sentenced there for committing a crime and no amount of language "lipstick" will turn it into a boys and girls scouts camp with maybe a little behavior problem. Granted, because of their age and perceived absence of notoriety they have a privilege of getting counseling, education and treatment while at the camp with the intention of getting them on a straight and narrow and back into the community. And rightfully so, but let's not forget that they are juvenile criminals with ideas in their minds, and while some of them stay and adjust, a number of them run away and end up in our neighborhoods causing trouble.
For that reason the camp's location needs to be remote and out of the proximity to the residential areas, which is the case now, with the current location of Camp Sweeney. In fact the current location is actually perfect. Why not keep it, even if the county must rebuild, to do it in the current location. This location is remote, not visible to the public, distant enough not to be heard and far from residential areas. Moving the camp to the edge of Fairmont Drive makes for a very

nervous community of Hillcrest Knolls, that only encounters these escapees on occasion now , but would see those incidents increase many fold if we had the camp across the street. This is not acceptable. The proposed camp relocation to the Fairmont Drive is a bad choice. It is too close to Hillcrest Knolls. In fact anywhere along Fairmont Drive between JJC and John George is too close to our neighborhood.

Increased crime is only one problem we see coming with the proposed project. There are more. Seven buildings ,a sports field and associated play areas make for a large campus that can be seen, heard and recognized for what it is, a detention center, from afar. With this comes noise, pollution, traffic, excessive night illumination and bad reputation.

We already have enough of that with JJC up the hill and John George nearby. These two are not reputable neighbors. We don't need the third one.

Nobody wants to live across the street from jail, prison, mental institution or detention camp. These are houses of ill repute.The mere awareness that one lives in close proximity to prisons and institutions and looks at them everyday, brings sadness and unease They don't bring joy and relaxation, something we seek to have when we get home. We rather look at the grassy field across the street than see the activities of the juveniles in the camp or hear their soccer games. Our homes are our places of repose when we need to get restored for the next day and not aggravated.

Just put yourself in our shoes for a moment and feel how it would be for you to be in our situation. Would you like this camp near your house? We are human beings here who have feelings, not any different than you, but people just like you that wish to have some peace and safety in their homes and neighborhoods. Please, hear us. We are the environment. We are the endangered specie that needs to be protected. Most people in this neighborhood are older people, with their main asset being their home.

What happens to the home values when the bad neighbor, like detention center you propose, moves in? The values go down. You would not want that to happen to you, would you? So please, find another location for your camp, somewhere deep in the belly of the land back there or somewhere up above JJC ,behind the building where it can blend with JJC and form one campus , or somewhere else, but away from our neighborhood.

We would welcome some hiking trails, tennis courts or a Trader Joe's, meditation center instead , nice neighbors , so our lives could be enhanced not diminished. After all we are the law abiding, hard working, tax paying citizens. It is us that need to be cultivated, not the criminals.

The last but not least concern we have is the sincerity of the County to hear our voices. We are noticing a lot of action in the proposed area with sections of it being fenced off and dirt being brought in as if decisions have already been made and the evaluation process we are going through is just a dog and pony show to satisfy the letter of the law.

Hope I am wrong on this and that our voices are heard and our lives matter to you and your new plans will reflect that.

Please, pass this on to other parties.

Respectfully

The Hillcrest Knolls Association
P.O. Box 717
San Lorenzo, CA 94580

November 15, 2015

Re: EIR for Camp Sweeney Replacement Project

The purpose of this letter from the Hillcrest Knolls Association is to formally oppose the current Camp Sweeney replacement project proposal for the following reasons:

- Improper noticing
- Lack of community stakeholders input on proposed project expansion
- Scope of proposal
- Facilities relocation
- Anticipated construction pollution

As the president of the Hillcrest Knolls Association, I was contacted a mere days before the November 5, 2015 public scoping meeting by a Hillcrest Knolls resident who received the notice by mail. My household did not receive a notice. After an informal canvassing of residents, only four more residents were identified as receiving this public notice. A resident of the Fairmont Terrace neighborhood also received notice of this public hearing. Needless to say, few interested parties were able to attend the hearing due to the last minute verbal notice.

What is deeply concerning about this project is the lack of details surrounding the proposal. According to a 2011 *OaklandNorth.net* news article, former Chief Probation Officer David Muhammad was to spearhead the Camp Sweeney rebuild project in the proceeding years, yet there were no discussions with the Hillcrest Knolls Association, the Ashland Community Association, R.A.F.T.A or the Castro Valley Municipal Advisory Council on the expansion of Camp Sweeney to include secured facilities units, a dormitory for female juveniles, and an increase in the number of committed male juveniles. Further, the renovated Camp Sweeney appears to no longer serve as a minimum security alternative to the primary juvenile justice center. This is a significant change with broad implications within the aforementioned communities which should have necessitated deep community involvement and discussion touchpoints, none of which occurred.

The purpose of Camp Sweeney is substantially altered with the replacement of its current facilities. A ‘camp’ is intended to be a minimum security location for rehabilitation and transition back to home and school life. The inclusion of seven new buildings (height undetermined), some of which are secured, massing along Fairmont Drive serves to promote a prison compound atmosphere and is an undesirable neighbor to the Hillcrest Knolls residents. Currently, when juveniles run away from the camp, they immediately come into Hillcrest Knolls to stay off the main thoroughfares. In one instance, two juveniles attempted to carjack vehicles as part of their getaway. Maintaining the existing Camp Sweeney location on the Fairmont campus is the preference of the Hillcrest Knolls residents. Although it appears that the argument to move Camp Sweeney to a new

location is tied to the Hayward fault, this is the same argument used for moving the main juvenile detention center to its new location. It's very unclear why the site of former juvenile hall is now less seismically challenged by the Hayward fault to allow for the construction and maintenance of seven buildings.

Included in the Camp Sweeney project description for Hillcrest Knolls is that we are 'buffered' from the Fairmont campus by mature landscaping. This is something of a misnomer. Much of the landscaping is in poor condition with fallen dead trees in the right of way and on GSA owned parcels along with other trees and bushes that are dying or diseased. During the public discussions phase for the new juvenile detention center in the early 2000's, our neighborhood was assured that the landscaping installation would soften the hard appearance of the building. It will be 20 years before most of the juvenile justice center building is obscured by the plantings.

During the construction phase of the juvenile detention center at 2500 Fairmont Drive, Hillcrest Knolls residents were subjected to constant noise which included yelling over bull horns and frequent burst of beeping from the equipment coupled with large plumes of dust. In addition, the lights used for night construction illuminated most of Van Avenue, and some of Placer Drive and Upland Rd. Those residents most affected by the source lighting were required to keep their window shades drawn and windows closed at nearly all times of the day. It is presumed that a 30 month construction project much closer in proximity to Hillcrest Knolls will bring about a higher level of noise, even more dust and debris, and be a much larger nuisance in general. In the years since the juvenile justice center has

been open, our neighborhood still complains of noise generated from the PA system used by its employees. The speaker projects as far as Saturn Drive.

For the reasons set forth above, the Hillcrest Association strongly encourages your office to present a materially revised plan to drastically scale back the planned construction of facilities, and maintain Camp Sweeney in its current location on the Fairmont campus.

Sincerely,

Dawn Clark-Montenegro
President
Hillcrest Knolls Association

Hello,

I am very unhappy with the proposed extension of Camp Sweeny. Camp Sweeny Currently is grossly understaffed and not at full capacity. The argument that we need a larger camp holds no merit if we don't even have this one at full capacity. Plus, we may be in an economic growth period right now, but we can't guarantee we will be like this in one, two, or three years. If there is an economic downturn, we will have a too large of a facility, which would waste resources to just run it, and not enough people to run it. That is a waste.

I find it a gross misuse of funds if we go ahead and build a new facility as well. We already have an existing building. How wasteful of the first use of those taxpayer's money if we go ahead and destroy an existing building. Why can't we reinforce this existing building, as well as gut it to better facilitate this new model of teaching you are taking on? The location of that building is perfect: away from the street and out of view. The foundation can be reinforced to retrofit it and prevent earthquake damage. Most homeowners that live here have had that done to their own homes because we all live on the fault line. Moving the facility ¼ of a mile closer to the street will not lessen the impact of major earthquake.

I also fear an increase in light pollution from the new structure and a decrease in my property value. How would you feel if an already existing boys camp came into your neighborhood built a huge complex, directly decrease the value of your property, and cause great noise, stress, and traffic to your quiet neighborhood. Do you not see the direct impact you would have on this community? We are hard working individuals that have put a lot of effort into making our home our sanctuary. How would you feel if after a hard day of work you come home to bottle neck traffic because a camp decided not to put the money into reinforcing an already existing structure? How would you feel if after dinner, you can't enjoy a tea with your view of the Bay Area, a view you worked many many years to get, because of the invasive lighting illuminated from Camp Sweeny? How about you put yourself in our shoes for a minute before you ruin our neighborhood.

Ultimately, we are looking at a lot of money and a facility that wants to increase in size by 150% and we lack a population to fill the facility. I mean, if you are in the business to improve the lives of these children, then enlarging a "camp" isn't the way to improve the lives of these children. These kids need attention from teachers, councilors, and mentors. Why don't you invest that money into that, as opposed to a larger jail to put them in.

Ivona Szudelski
2300 Upland Rd
San Leandro, CA 94578
925-876-9316
Iszudelski@gmail.com

CAMP SWEENEY REPLACEMENT PROJECT

Public EIR Scoping Meeting
November 5, 2015 6:00 P.M.
Alameda County Planning Commission Meeting Room
224 W. Winton Avenue
Hayward, California

NOV 16 2015

Comment Sheet

Name Lori Tebo

Address: 14773 Van Ave. San Leandro

Email: LoriTebo@sbcglobal.net

☐ ADD ME TO THE MAILING LIST

What potential environmental issues and impacts would you like addressed in the Environmental Impact Report? (Please be as specific as possible)

Increased traffic, litter, crime, park use. Potential for home invasion and burglary, and vandalism, loss of open land and watershed.

Comments can be sent to:

Maritza Delgadillo, Senior Project Manager
Alameda County General Services Agency (GSA), Technical Services Division
1401 Lakeside Drive, Suite 800
Oakland, CA 94612
Maritza.delgadillo@acgov.org

From: **Philip Denst** pdenst@icloud.com
Subject: Statement
Date: Today at 2:55 PM
To: pdenst@icloud.com

RECEIVED
COUNTY OF ALAMEDA
NOV 16 2015

Subject, Sweeney Camp Proposal.

I am against building a new Camp Sweeney complex.
Why not remodel the existing building and landscape it rather than build a new facility. It would be more productive to remodel and use the extra money on having a larger staff to help the clients.

The existing building will fall into runes if left unused. It should be renovated and upgraded just as the hospital next to it has been done. New dose not necessarily mean better.

The visual proposal shown on the screen showed a lot of landscaping which would take a lot of care and eventually it will be neglected. The proposed structures look as if they are to be light ones that will need a lot of upkeep or will fall into disrepair in a short time.

Part of the new existing building has beds that should be used instead of building more that will add to the beds not being used.

What you have now is understaffed. Adding more facilities will only exasperate the understaffing problem. Troubled kids need more one on one attention to help them become productive adults.

Our neighborhood will be impacted, in a negative way, if you keep expanding the juvenile footprint. The eco system will become more damaged with continually building. Property values will be affected too. Safety will be impacted, for existing homes, if you keep making your complex larger and go ahead with this proposal. This seems very wasteful and harmful to the community to build more and more.

Why are you building all of these structures right on an earthquake fault? It should be built away from such unstable ground.

Appendix B:

Air Quality Modeling Results, Health Risk Screening Analysis and Greenhouse Gas and Climate Change Screening Analysis

Lamphier-Gregory

October 19, 2015

Camp Sweeney

Alameda County, Annual

1.0 Project Characteristics

1.1 Land Usage

Land Uses	Size	Metric	Lot Acreage	Floor Surface Area	Population
User Defined Educational	120.00	User Defined Unit	9.98	72,527.00	120

1.2 Other Project Characteristics

Urbanization	Urban	**Wind Speed (m/s)**	2.2	**Precipitation Freq (Days)**	63
Climate Zone	5			**Operational Year**	2019
Utility Company					
CO2 Intensity (lb/MWhr)	0	**CH4 Intensity (lb/MWhr)**	0	**N2O Intensity (lb/MWhr)**	0

1.3 User Entered Comments & Non-Default Data

Project Characteristics -

Land Use - Acreage and square from applicant info. Unit amount is beds.

Construction Phase - Per schedule from applicant supplemented with model defaults wehere necessary.

Grading - Soil is anticipated to be enginnered and blanace on site with no net import/export.

Demolition -

Vehicle Trips - For a conservative analysis, all trips were assumed to be primary trips with the longest trip length type (commercial-work).

Energy Use - Per the CalEEMod instructions, energy usage for a user defined entry was determined via the CEUS database: http://capabilities.itron.com/CeusWeb/Chart.aspx. A "lodgings" use was assigned, which showed annual energy usage of 10,000 kWhr/ksq/year, which was translated to account for size in bed (0.6 ksq per bed). For a conservative analysis, this was assumed to be all electricity in new buildings (title 24).

Water And Wastewater - Water usage calculated using Pacific Institute “Waste Not Want Not” report per CallEEMod methodologies with the closest use being "hotel".
Solid Waste - Approximatley 1 ton per bed per year.

Construction Off-road Equipment Mitigation - Tier 4 construction equipment used.

Table Name	Column Name	Default Value	New Value
tblConstEquipMitigation	NumberOfEquipmentMitigated	0.00	1.00
tblConstEquipMitigation	NumberOfEquipmentMitigated	0.00	4.00
tblConstEquipMitigation	NumberOfEquipmentMitigated	0.00	1.00
tblConstEquipMitigation	NumberOfEquipmentMitigated	0.00	1.00
tblConstEquipMitigation	NumberOfEquipmentMitigated	0.00	3.00
tblConstEquipMitigation	NumberOfEquipmentMitigated	0.00	1.00
tblConstEquipMitigation	NumberOfEquipmentMitigated	0.00	2.00
tblConstEquipMitigation	NumberOfEquipmentMitigated	0.00	2.00
tblConstEquipMitigation	NumberOfEquipmentMitigated	0.00	6.00
tblConstEquipMitigation	NumberOfEquipmentMitigated	0.00	10.00
tblConstEquipMitigation	NumberOfEquipmentMitigated	0.00	1.00
tblConstEquipMitigation	NumberOfEquipmentMitigated	0.00	2.00
tblConstEquipMitigation	NumberOfEquipmentMitigated	0.00	1.00
tblConstEquipMitigation	Tier	No Change	Tier 4 Final
tblConstEquipMitigation	Tier	No Change	Tier 4 Final
tblConstEquipMitigation	Tier	No Change	Tier 4 Final
tblConstEquipMitigation	Tier	No Change	Tier 4 Final
tblConstEquipMitigation	Tier	No Change	Tier 4 Final
tblConstEquipMitigation	Tier	No Change	Tier 4 Final
tblConstEquipMitigation	Tier	No Change	Tier 4 Final
tblConstEquipMitigation	Tier	No Change	Tier 4 Final
tblConstEquipMitigation	Tier	No Change	Tier 4 Final
tblConstEquipMitigation	Tier	No Change	Tier 4 Final
tblConstEquipMitigation	Tier	No Change	Tier 4 Final
tblConstEquipMitigation	Tier	No Change	Tier 4 Final
tblConstEquipMitigation	Tier	No Change	Tier 4 Final
tblConstructionPhase	NumDays	230.00	475.00
tblConstructionPhase	NumDays	20.00	45.00

tblConstructionPhase	NumDays	20.00	150.00
tblConstructionPhase	NumDays	20.00	15.00
tblConstructionPhase	NumDays	10.00	20.00
tblConstructionPhase	PhaseStartDate	11/25/2017	11/27/2017
tblConstructionPhase	PhaseStartDate	10/12/2019	10/14/2019
tblConstructionPhase	PhaseStartDate	4/29/2017	5/1/2017
tblConstructionPhase	PhaseStartDate	9/21/2019	9/23/2019
tblEnergyUse	T24E	0.00	6,044.00
tblGrading	AcresOfGrading	65.00	3.10
tblGrading	AcresOfGrading	0.00	3.10
tblLandUse	LandUseSquareFeet	0.00	72,527.00
tblLandUse	LotAcreage	0.00	9.98
tblLandUse	Population	0.00	120.00
tblProjectCharacteristics	OperationalYear	2014	2019
tblSolidWaste	SolidWasteGenerationRate	0.00	120.00
tblVehicleTrips	CW_TTP	0.00	100.00
tblVehicleTrips	PR_TP	0.00	100.00
tblVehicleTrips	ST_TR	0.00	0.56
tblVehicleTrips	SU_TR	0.00	0.56
tblVehicleTrips	WD_TR	0.00	0.56
tblWater	IndoorWaterUseRate	0.00	2,424,240.00

2.0 Emissions Summary

2.1 Overall Construction

Unmitigated Construction

	ROG	NOx	CO	SO2	Fugitive PM10	Exhaust PM10	PM10 Total	Fugitive PM2.5	Exhaust PM2.5	PM2.5 Total	Bio- CO2	NBio- CO2	Total CO2	CH4	N2O	CO2e
Year	tons/yr										MT/yr					

2017	0.3537	3.5684	2.6264		0.5916	0.2030	0.7946	0.3192	0.1872	0.5064			289.8942	0.0827	0.0000	291.6306
2018	0.3766	3.1819	2.6636		0.0457	0.1972	0.2429	0.0124	0.1853	0.1977			371.8978	0.0774	0.0000	373.5233
2019	0.3289	2.9707	2.7041		0.0531	0.1663	0.2193	0.0126	0.1558	0.1684			368.6163	0.0824	0.0000	370.3467
Total	**1.0592**	**9.7210**	**7.9940**		**0.6903**	**0.5665**	**1.2568**	**0.3441**	**0.5284**	**0.8725**			**1,030.4083**	**0.2425**	**0.0000**	**1,035.5006**

Mitigated Construction

	ROG	NOx	CO	SO2	Fugitive PM10	Exhaust PM10	PM10 Total	Fugitive PM2.5	Exhaust PM2.5	PM2.5 Total	Bio- CO2	NBio- CO2	Total CO2	CH4	N2O	CO2e
Year	tons/yr										MT/yr					
2017	0.0434	0.1884	2.0065		0.5916	5.0900e-003	0.5967	0.3192	5.0600e-003	0.3242			289.8939	0.0827	0.0000	291.6303
2018	0.0709	0.4372	2.6477		0.0457	7.4900e-003	0.0532	0.0124	7.3100e-003	0.0197			371.8974	0.0774	0.0000	373.5229
2019	0.0648	0.3796	2.5937		0.0531	7.2800e-003	0.0603	0.0126	7.1400e-003	0.0197			368.6160	0.0824	0.0000	370.3463
Total	**0.1792**	**1.0052**	**7.2479**		**0.6903**	**0.0199**	**0.7102**	**0.3441**	**0.0195**	**0.3636**			**1,030.4072**	**0.2425**	**0.0000**	**1,035.4995**

	ROG	**NOx**	**CO**	**SO2**	**Fugitive PM10**	**Exhaust PM10**	**PM10 Total**	**Fugitive PM2.5**	**Exhaust PM2.5**	**PM2.5 Total**	**Bio- CO2**	**NBio-CO2**	**Total CO2**	**CH4**	**N20**	**CO2e**
Percent Reduction	**83.08**	**89.66**	**9.33**	**0.00**	**0.00**	**96.49**	**43.49**	**0.00**	**96.31**	**58.32**	**0.00**	**0.00**	**0.00**	**0.00**	**0.00**	**0.00**

2.2 Overall Operational

Unmitigated Operational

	ROG	NOx	CO	SO2	Fugitive PM10	Exhaust PM10	PM10 Total	Fugitive PM2.5	Exhaust PM2.5	PM2.5 Total	Bio- CO2	NBio- CO2	Total CO2	CH4	N2O	CO2e
Category	tons/yr										MT/yr					

Area	0.3212	1.0000e-005	1.1100e-003			0.0000	0.0000		0.0000	0.0000			2.1400e-003	1.0000e-005	0.0000	2.2700e-003
Energy	0.0000	0.0000	0.0000			0.0000	0.0000		0.0000	0.0000			0.0000	0.0000	0.0000	0.0000
Mobile	0.0429	0.1516	0.5125		0.0869	2.2200e-003	0.0891	0.0234	2.0400e-003	0.0254			96.8760	3.3400e-003	0.0000	96.9460
Waste						0.0000	0.0000		0.0000	0.0000			24.3589	1.4396	0.0000	54.5899
Water						0.0000	0.0000		0.0000	0.0000			0.7691	0.0790	1.8700e-003	3.0062
Total	**0.3641**	**0.1516**	**0.5136**		**0.0869**	**2.2200e-003**	**0.0891**	**0.0234**	**2.0400e-003**	**0.0254**			**122.0061**	**1.5219**	**1.8700e-003**	**154.5444**

3.0 Construction Detail

Construction Phase

Phase Number	Phase Name	Phase Type	Start Date	End Date	Num Days Week	Num Days	Phase Description
1	Site Preparation	Site Preparation	4/3/2017	4/28/2017	5	20	
2	Grading	Grading	5/1/2017	11/24/2017	5	150	
3	Building Construction	Building Construction	11/27/2017	9/20/2019	5	475	
4	Paving	Paving	9/23/2019	10/11/2019	5	15	
5	Demolition	Demolition	10/14/2019	12/13/2019	5	45	

Acres of Grading (Site Preparation Phase): 3.1

Acres of Grading (Grading Phase): 3.1

Acres of Paving: 0

Residential Indoor: 0; Residential Outdoor: 0; Non-Residential Indoor: 0; Non-Residential Outdoor: 0 (Architectural Coating – sqft)

OffRoad Equipment

Phase Name	Offroad Equipment Type	Amount	Usage Hours	Horse Power	Load Factor
Demolition	Excavators	3	8.00	162	0.38
Demolition	Concrete/Industrial Saws	1	8.00	81	0.73
Grading	Excavators	1	8.00	162	0.38

Building Construction	Cranes	1	7.00	226	0.29
Building Construction	Forklifts	3	8.00	89	0.20
Building Construction	Generator Sets	1	8.00	84	0.74
Paving	Pavers	2	8.00	125	0.42
Paving	Rollers	2	8.00	80	0.38
Demolition	Rubber Tired Dozers	2	8.00	255	0.40
Grading	Rubber Tired Dozers	1	8.00	255	0.40
Building Construction	Tractors/Loaders/Backhoes	3	7.00	97	0.37
Grading	Graders	1	8.00	174	0.41
Grading	Tractors/Loaders/Backhoes	3	8.00	97	0.37
Paving	Paving Equipment	2	8.00	130	0.36
Site Preparation	Tractors/Loaders/Backhoes	4	8.00	97	0.37
Site Preparation	Rubber Tired Dozers	3	8.00	255	0.40
Building Construction	Welders	1	8.00	46	0.45

Trips and VMT

Phase Name	Offroad Equipment Count	Worker Trip Number	Vendor Trip Number	Hauling Trip Number	Worker Trip Length	Vendor Trip Length	Hauling Trip Length	Worker Vehicle Class	Vendor Vehicle Class	Hauling Vehicle Class
Demolition	6	15.00	0.00	136.00	12.40	7.30	20.00	LD_Mix	HDT_Mix	HHDT
Site Preparation	7	18.00	0.00	0.00	12.40	7.30	20.00	LD_Mix	HDT_Mix	HHDT
Grading	6	15.00	0.00	0.00	12.40	7.30	20.00	LD_Mix	HDT_Mix	HHDT
Building Construction	9	30.00	12.00	0.00	12.40	7.30	20.00	LD_Mix	HDT_Mix	HHDT
Paving	6	15.00	0.00	0.00	12.40	7.30	20.00	LD_Mix	HDT_Mix	HHDT

3.1 Mitigation Measures Construction

Use Cleaner Engines for Construction Equipment

Clean Paved Roads

3.2 Site Preparation - 2017

Unmitigated Construction On-Site

	ROG	NOx	CO	SO2	Fugitive PM10	Exhaust PM10	PM10 Total	Fugitive PM2.5	Exhaust PM2.5	PM2.5 Total	Bio- CO2	NBio- CO2	Total CO2	CH4	N2O	CO2e
Category	tons/yr										MT/yr					
Fugitive Dust					0.1823	0.0000	0.1823	0.0995	0.0000	0.0995			0.0000	0.0000	0.0000	0.0000
Off-Road	0.0484	0.5175	0.3940			0.0275	0.0275		0.0253	0.0253			36.3154	0.0111	0.0000	36.5491
Total	**0.0484**	**0.5175**	**0.3940**		**0.1823**	**0.0275**	**0.2099**	**0.0995**	**0.0253**	**0.1248**			**36.3154**	**0.0111**	**0.0000**	**36.5491**

Unmitigated Construction Off-Site

	ROG	NOx	CO	SO2	Fugitive PM10	Exhaust PM10	PM10 Total	Fugitive PM2.5	Exhaust PM2.5	PM2.5 Total	Bio- CO2	NBio- CO2	Total CO2	CH4	N2O	CO2e
Category	tons/yr										MT/yr					
Hauling	0.0000	0.0000	0.0000		0.0000	0.0000	0.0000	0.0000	0.0000	0.0000			0.0000	0.0000	0.0000	0.0000
Vendor	0.0000	0.0000	0.0000		0.0000	0.0000	0.0000	0.0000	0.0000	0.0000			0.0000	0.0000	0.0000	0.0000
Worker	6.1000e-004	9.1000e-004	8.7400e-003		1.6300e-003	1.0000e-005	1.6500e-003	4.3000e-004	1.0000e-005	4.5000e-004			1.4295	8.0000e-005	0.0000	1.4312
Total	**6.1000e-004**	**9.1000e-004**	**8.7400e-003**		**1.6300e-003**	**1.0000e-005**	**1.6500e-003**	**4.3000e-004**	**1.0000e-005**	**4.5000e-004**			**1.4295**	**8.0000e-005**	**0.0000**	**1.4312**

Mitigated Construction On-Site

	ROG	NOx	CO	SO2	Fugitive PM10	Exhaust PM10	PM10 Total	Fugitive PM2.5	Exhaust PM2.5	PM2.5 Total	Bio- CO2	NBio- CO2	Total CO2	CH4	N2O	CO2e
Category	tons/yr										MT/yr					

Fugitive Dust					0.1823	0.0000	0.1823	0.0995	0.0000	0.0995			0.0000	0.0000	0.0000	0.0000
Off-Road	4.7600e-003	0.0206	0.2124			6.3000e-004	6.3000e-004		6.3000e-004	6.3000e-004			36.3153	0.0111	0.0000	36.5490
Total	**4.7600e-003**	**0.0206**	**0.2124**		**0.1823**	**6.3000e-004**	**0.1829**	**0.0995**	**6.3000e-004**	**0.1001**			**36.3153**	**0.0111**	**0.0000**	**36.5490**

Mitigated Construction Off-Site

	ROG	NOx	CO	SO2	Fugitive PM10	Exhaust PM10	PM10 Total	Fugitive PM2.5	Exhaust PM2.5	PM2.5 Total	Bio- CO2	NBio- CO2	Total CO2	CH4	N2O	CO2e
Category	tons/yr										MT/yr					
Hauling	0.0000	0.0000	0.0000		0.0000	0.0000	0.0000	0.0000	0.0000	0.0000			0.0000	0.0000	0.0000	0.0000
Vendor	0.0000	0.0000	0.0000		0.0000	0.0000	0.0000	0.0000	0.0000	0.0000			0.0000	0.0000	0.0000	0.0000
Worker	6.1000e-004	9.1000e-004	8.7400e-003		1.6300e-003	1.0000e-005	1.6500e-003	4.3000e-004	1.0000e-005	4.5000e-004			1.4295	8.0000e-005	0.0000	1.4312
Total	**6.1000e-004**	**9.1000e-004**	**8.7400e-003**		**1.6300e-003**	**1.0000e-005**	**1.6500e-003**	**4.3000e-004**	**1.0000e-005**	**4.5000e-004**			**1.4295**	**8.0000e-005**	**0.0000**	**1.4312**

3.3 Grading - 2017

Unmitigated Construction On-Site

	ROG	NOx	CO	SO2	Fugitive PM10	Exhaust PM10	PM10 Total	Fugitive PM2.5	Exhaust PM2.5	PM2.5 Total	Bio- CO2	NBio- CO2	Total CO2	CH4	N2O	CO2e
Category	tons/yr										MT/yr					
Fugitive Dust					0.3931	0.0000	0.3931	0.2153	0.0000	0.2153			0.0000	0.0000	0.0000	0.0000
Off-Road	0.2592	2.6987	1.9036			0.1529	0.1529		0.1407	0.1407			207.0876	0.0635	0.0000	208.4201
Total	**0.2592**	**2.6987**	**1.9036**		**0.3931**	**0.1529**	**0.5460**	**0.2153**	**0.1407**	**0.3560**			**207.0876**	**0.0635**	**0.0000**	**208.4201**

Unmitigated Construction Off-Site

	ROG	NOx	CO	SO2	Fugitive PM10	Exhaust PM10	PM10 Total	Fugitive PM2.5	Exhaust PM2.5	PM2.5 Total	Bio- CO2	NBio- CO2	Total CO2	CH4	N2O	CO2e
Category	tons/yr										MT/yr					
Hauling	0.0000	0.0000	0.0000		0.0000	0.0000	0.0000	0.0000	0.0000	0.0000			0.0000	0.0000	0.0000	0.0000
Vendor	0.0000	0.0000	0.0000		0.0000	0.0000	0.0000	0.0000	0.0000	0.0000			0.0000	0.0000	0.0000	0.0000
Worker	3.8100e-003	5.7000e-003	0.0546		0.0102	8.0000e-005	0.0103	2.7200e-003	8.0000e-005	2.7900e-003			8.9346	4.8000e-004	0.0000	8.9447
Total	**3.8100e-003**	**5.7000e-003**	**0.0546**		**0.0102**	**8.0000e-005**	**0.0103**	**2.7200e-003**	**8.0000e-005**	**2.7900e-003**			**8.9346**	**4.8000e-004**	**0.0000**	**8.9447**

Mitigated Construction On-Site

	ROG	NOx	CO	SO2	Fugitive PM10	Exhaust PM10	PM10 Total	Fugitive PM2.5	Exhaust PM2.5	PM2.5 Total	Bio- CO2	NBio- CO2	Total CO2	CH4	N2O	CO2e
Category	tons/yr										MT/yr					
Fugitive Dust					0.3931	0.0000	0.3931	0.2153	0.0000	0.2153			0.0000	0.0000	0.0000	0.0000
Off-Road	0.0272	0.1178	1.4742			3.6300e-003	3.6300e-003		3.6300e-003	3.6300e-003			207.0874	0.0635	0.0000	208.4198
Total	**0.0272**	**0.1178**	**1.4742**		**0.3931**	**3.6300e-003**	**0.3967**	**0.2153**	**3.6300e-003**	**0.2190**			**207.0874**	**0.0635**	**0.0000**	**208.4198**

Mitigated Construction Off-Site

	ROG	NOx	CO	SO2	Fugitive PM10	Exhaust PM10	PM10 Total	Fugitive PM2.5	Exhaust PM2.5	PM2.5 Total	Bio- CO2	NBio- CO2	Total CO2	CH4	N2O	CO2e

Category	tons/yr										MT/yr					
Hauling	0.0000	0.0000	0.0000		0.0000	0.0000	0.0000	0.0000	0.0000	0.0000			0.0000	0.0000	0.0000	0.0000
Vendor	0.0000	0.0000	0.0000		0.0000	0.0000	0.0000	0.0000	0.0000	0.0000			0.0000	0.0000	0.0000	0.0000
Worker	3.8100e-003	5.7000e-003	0.0546		0.0102	8.0000e-005	0.0103	2.7200e-003	8.0000e-005	2.7900e-003			8.9346	4.8000e-004	0.0000	8.9447
Total	**3.8100e-003**	**5.7000e-003**	**0.0546**		**0.0102**	**8.0000e-005**	**0.0103**	**2.7200e-003**	**8.0000e-005**	**2.7900e-003**			**8.9346**	**4.8000e-004**	**0.0000**	**8.9447**

3.4 Building Construction - 2017

Unmitigated Construction On-Site

	ROG	NOx	CO	SO2	Fugitive PM10	Exhaust PM10	PM10 Total	Fugitive PM2.5	Exhaust PM2.5	PM2.5 Total	Bio- CO2	NBio- CO2	Total CO2	CH4	N2O	CO2e
Category	tons/yr										MT/yr					
Off-Road	0.0388	0.3301	0.2266			0.0223	0.0223		0.0209	0.0209			29.9349	7.3700e-003	0.0000	30.0896
Total	**0.0388**	**0.3301**	**0.2266**			**0.0223**	**0.0223**		**0.0209**	**0.0209**			**29.9349**	**7.3700e-003**	**0.0000**	**30.0896**

Unmitigated Construction Off-Site

	ROG	NOx	CO	SO2	Fugitive PM10	Exhaust PM10	PM10 Total	Fugitive PM2.5	Exhaust PM2.5	PM2.5 Total	Bio- CO2	NBio- CO2	Total CO2	CH4	N2O	CO2e
Category	tons/yr										MT/yr					
Hauling	0.0000	0.0000	0.0000		0.0000	0.0000	0.0000	0.0000	0.0000	0.0000			0.0000	0.0000	0.0000	0.0000
Vendor	1.6900e-003	0.0136	0.0206		9.7000e-004	2.0000e-004	1.1700e-003	2.8000e-004	1.8000e-004	4.6000e-004			3.2140	3.0000e-005	0.0000	3.2145
Worker	1.2700e-003	1.9000e-003	0.0182		3.4000e-003	3.0000e-005	3.4300e-003	9.1000e-004	3.0000e-005	9.3000e-004			2.9782	1.6000e-004	0.0000	2.9816

Total	**2.9600e-003**	**0.0155**	**0.0388**		**4.3700e-003**	**2.3000e-004**	**4.6000e-003**	**1.1900e-003**	**2.1000e-004**	**1.3900e-003**			**6.1922**	**1.9000e-004**	**0.0000**	**6.1961**

Mitigated Construction On-Site

	ROG	NOx	CO	SO2	Fugitive PM10	Exhaust PM10	PM10 Total	Fugitive PM2.5	Exhaust PM2.5	PM2.5 Total	Bio- CO2	NBio- CO2	Total CO2	CH4	N2O	CO2e
Category	tons/yr										MT/yr					
Off-Road	4.0800e-003	0.0279	0.2176			5.1000e-004	5.1000e-004		5.1000e-004	5.1000e-004			29.9349	7.3700e-003	0.0000	30.0896
Total	**4.0800e-003**	**0.0279**	**0.2176**			**5.1000e-004**	**5.1000e-004**		**5.1000e-004**	**5.1000e-004**			**29.9349**	**7.3700e-003**	**0.0000**	**30.0896**

Mitigated Construction Off-Site

	ROG	NOx	CO	SO2	Fugitive PM10	Exhaust PM10	PM10 Total	Fugitive PM2.5	Exhaust PM2.5	PM2.5 Total	Bio- CO2	NBio- CO2	Total CO2	CH4	N2O	CO2e
Category	tons/yr										MT/yr					
Hauling	0.0000	0.0000	0.0000		0.0000	0.0000	0.0000	0.0000	0.0000	0.0000			0.0000	0.0000	0.0000	0.0000
Vendor	1.6900e-003	0.0136	0.0206		9.7000e-004	2.0000e-004	1.1700e-003	2.8000e-004	1.8000e-004	4.6000e-004			3.2140	3.0000e-005	0.0000	3.2145
Worker	1.2700e-003	1.9000e-003	0.0182		3.4000e-003	3.0000e-005	3.4300e-003	9.1000e-004	3.0000e-005	9.3000e-004			2.9782	1.6000e-004	0.0000	2.9816
Total	**2.9600e-003**	**0.0155**	**0.0388**		**4.3700e-003**	**2.3000e-004**	**4.6000e-003**	**1.1900e-003**	**2.1000e-004**	**1.3900e-003**			**6.1922**	**1.9000e-004**	**0.0000**	**6.1961**

3.4 Building Construction - 2018

Unmitigated Construction On-Site

	ROG	NOx	CO	SO2	Fugitive PM10	Exhaust PM10	PM10 Total	Fugitive PM2.5	Exhaust PM2.5	PM2.5 Total	Bio- CO2	NBio- CO2	Total CO2	CH4	N2O	CO2e
Category	tons/yr										MT/yr					
Off-Road	0.3483	3.0355	2.2880			0.1950	0.1950		0.1833	0.1833			308.9844	0.0756	0.0000	310.5723
Total	**0.3483**	**3.0355**	**2.2880**			**0.1950**	**0.1950**		**0.1833**	**0.1833**			**308.9844**	**0.0756**	**0.0000**	**310.5723**

Unmitigated Construction Off-Site

	ROG	NOx	CO	SO2	Fugitive PM10	Exhaust PM10	PM10 Total	Fugitive PM2.5	Exhaust PM2.5	PM2.5 Total	Bio- CO2	NBio- CO2	Total CO2	CH4	N2O	CO2e
Category	tons/yr										MT/yr					
Hauling	0.0000	0.0000	0.0000		0.0000	0.0000	0.0000	0.0000	0.0000	0.0000			0.0000	0.0000	0.0000	0.0000
Vendor	0.0166	0.1285	0.2060		0.0101	1.9100e-003	0.0120	2.9100e-003	1.7600e-003	4.6700e-003			32.9757	2.6000e-004	0.0000	32.9811
Worker	0.0118	0.0178	0.1695		0.0355	2.8000e-004	0.0358	9.4500e-003	2.6000e-004	9.7100e-003			29.9377	1.5300e-003	0.0000	29.9699
Total	**0.0283**	**0.1464**	**0.3756**		**0.0457**	**2.1900e-003**	**0.0479**	**0.0124**	**2.0200e-003**	**0.0144**			**62.9133**	**1.7900e-003**	**0.0000**	**62.9510**

Mitigated Construction On-Site

	ROG	NOx	CO	SO2	Fugitive PM10	Exhaust PM10	PM10 Total	Fugitive PM2.5	Exhaust PM2.5	PM2.5 Total	Bio- CO2	NBio- CO2	Total CO2	CH4	N2O	CO2e
Category	tons/yr										MT/yr					

Off-Road	0.0426	0.2909	2.2721			5.3000e-003	5.3000e-003		5.3000e-003	5.3000e-003			308.9841	0.0756	0.0000	310.5720
Total	**0.0426**	**0.2909**	**2.2721**			**5.3000e-003**	**5.3000e-003**		**5.3000e-003**	**5.3000e-003**			**308.9841**	**0.0756**	**0.0000**	**310.5720**

Mitigated Construction Off-Site

	ROG	NOx	CO	SO2	Fugitive PM10	Exhaust PM10	PM10 Total	Fugitive PM2.5	Exhaust PM2.5	PM2.5 Total	Bio- CO2	NBio- CO2	Total CO2	CH4	N2O	CO2e
Category	tons/yr										MT/yr					
Hauling	0.0000	0.0000	0.0000		0.0000	0.0000	0.0000	0.0000	0.0000	0.0000			0.0000	0.0000	0.0000	0.0000
Vendor	0.0166	0.1285	0.2060		0.0101	1.9100e-003	0.0120	2.9100e-003	1.7600e-003	4.6700e-003			32.9757	2.6000e-004	0.0000	32.9811
Worker	0.0118	0.0178	0.1695		0.0355	2.8000e-004	0.0358	9.4500e-003	2.6000e-004	9.7100e-003			29.9377	1.5300e-003	0.0000	29.9699
Total	**0.0283**	**0.1464**	**0.3756**		**0.0457**	**2.1900e-003**	**0.0479**	**0.0124**	**2.0200e-003**	**0.0144**			**62.9133**	**1.7900e-003**	**0.0000**	**62.9510**

3.4 Building Construction - 2019

Unmitigated Construction On-Site

	ROG	NOx	CO	SO2	Fugitive PM10	Exhaust PM10	PM10 Total	Fugitive PM2.5	Exhaust PM2.5	PM2.5 Total	Bio- CO2	NBio- CO2	Total CO2	CH4	N2O	CO2e
Category	tons/yr										MT/yr					
Off-Road	0.2222	1.9812	1.6179			0.1214	0.1214		0.1142	0.1142			221.2460	0.0538	0.0000	222.3765
Total	**0.2222**	**1.9812**	**1.6179**			**0.1214**	**0.1214**		**0.1142**	**0.1142**			**221.2460**	**0.0538**	**0.0000**	**222.3765**

Unmitigated Construction Off-Site

	ROG	NOx	CO	SO2	Fugitive PM10	Exhaust PM10	PM10 Total	Fugitive PM2.5	Exhaust PM2.5	PM2.5 Total	Bio- CO2	NBio- CO2	Total CO2	CH4	N2O	CO2e
Category	tons/yr										MT/yr					
Hauling	0.0000	0.0000	0.0000		0.0000	0.0000	0.0000	0.0000	0.0000	0.0000			0.0000	0.0000	0.0000	0.0000
Vendor	0.0110	0.0849	0.1412		7.3300e-003	1.2900e-003	8.6200e-003	2.1100e-003	1.1800e-003	3.2900e-003			23.4665	1.8000e-004	0.0000	23.4703
Worker	7.7500e-003	0.0118	0.1114		0.0257	2.0000e-004	0.0259	6.8400e-003	1.8000e-004	7.0300e-003			20.9008	1.0300e-003	0.0000	20.9224
Total	**0.0187**	**0.0967**	**0.2526**		**0.0331**	**1.4900e-003**	**0.0346**	**8.9500e-003**	**1.3600e-003**	**0.0103**			**44.3672**	**1.2100e-003**	**0.0000**	**44.3927**

Mitigated Construction On-Site

	ROG	NOx	CO	SO2	Fugitive PM10	Exhaust PM10	PM10 Total	Fugitive PM2.5	Exhaust PM2.5	PM2.5 Total	Bio- CO2	NBio- CO2	Total CO2	CH4	N2O	CO2e
Category	tons/yr										MT/yr					
Off-Road	0.0309	0.2106	1.6453			3.8400e-003	3.8400e-003		3.8400e-003	3.8400e-003			221.2458	0.0538	0.0000	222.3762
Total	**0.0309**	**0.2106**	**1.6453**			**3.8400e-003**	**3.8400e-003**		**3.8400e-003**	**3.8400e-003**			**221.2458**	**0.0538**	**0.0000**	**222.3762**

Mitigated Construction Off-Site

	ROG	NOx	CO	SO2	Fugitive PM10	Exhaust PM10	PM10 Total	Fugitive PM2.5	Exhaust PM2.5	PM2.5 Total	Bio- CO2	NBio- CO2	Total CO2	CH4	N2O	CO2e

Category	tons/yr										MT/yr					
Hauling	0.0000	0.0000	0.0000		0.0000	0.0000	0.0000	0.0000	0.0000	0.0000			0.0000	0.0000	0.0000	0.0000
Vendor	0.0110	0.0849	0.1412		7.3300e-003	1.2900e-003	8.6200e-003	2.1100e-003	1.1800e-003	3.2900e-003			23.4665	1.8000e-004	0.0000	23.4703
Worker	7.7500e-003	0.0118	0.1114		0.0257	2.0000e-004	0.0259	6.8400e-003	1.8000e-004	7.0300e-003			20.9008	1.0300e-003	0.0000	20.9224
Total	**0.0187**	**0.0967**	**0.2526**		**0.0331**	**1.4900e-003**	**0.0346**	**8.9500e-003**	**1.3600e-003**	**0.0103**			**44.3672**	**1.2100e-003**	**0.0000**	**44.3927**

3.5 Paving - 2019

Unmitigated Construction On-Site

	ROG	NOx	CO	SO2	Fugitive PM10	Exhaust PM10	PM10 Total	Fugitive PM2.5	Exhaust PM2.5	PM2.5 Total	Bio- CO2	NBio- CO2	Total CO2	CH4	N2O	CO2e
Category	tons/yr										MT/yr					
Off-Road	0.0107	0.1120	0.1077			6.0700e-003	6.0700e-003		5.5900e-003	5.5900e-003			15.0296	4.7600e-003	0.0000	15.1295
Paving	0.0000					0.0000	0.0000		0.0000	0.0000			0.0000	0.0000	0.0000	0.0000
Total	**0.0107**	**0.1120**	**0.1077**			**6.0700e-003**	**6.0700e-003**		**5.5900e-003**	**5.5900e-003**			**15.0296**	**4.7600e-003**	**0.0000**	**15.1295**

Unmitigated Construction Off-Site

	ROG	NOx	CO	SO2	Fugitive PM10	Exhaust PM10	PM10 Total	Fugitive PM2.5	Exhaust PM2.5	PM2.5 Total	Bio- CO2	NBio- CO2	Total CO2	CH4	N2O	CO2e
Category	tons/yr										MT/yr					
Hauling	0.0000	0.0000	0.0000		0.0000	0.0000	0.0000	0.0000	0.0000	0.0000			0.0000	0.0000	0.0000	0.0000
Vendor	0.0000	0.0000	0.0000		0.0000	0.0000	0.0000	0.0000	0.0000	0.0000			0.0000	0.0000	0.0000	0.0000
Worker	3.1000e-004	4.7000e-004	4.4200e-003		1.0200e-003	1.0000e-005	1.0300e-003	2.7000e-004	1.0000e-005	2.8000e-004			0.8294	4.0000e-005	0.0000	0.8303

Total	**3.1000e-004**	**4.7000e-004**	**4.4200e-003**		**1.0200e-003**	**1.0000e-005**	**1.0300e-003**	**2.7000e-004**	**1.0000e-005**	**2.8000e-004**			**0.8294**	**4.0000e-005**	**0.0000**	**0.8303**

Mitigated Construction On-Site

	ROG	NOx	CO	SO2	Fugitive PM10	Exhaust PM10	PM10 Total	Fugitive PM2.5	Exhaust PM2.5	PM2.5 Total	Bio- CO2	NBio- CO2	Total CO2	CH4	N2O	CO2e
Category	tons/yr										MT/yr					
Off-Road	2.0600e-003	8.9200e-003	0.1270			2.7000e-004	2.7000e-004		2.7000e-004	2.7000e-004			15.0296	4.7600e-003	0.0000	15.1294
Paving	0.0000					0.0000	0.0000		0.0000	0.0000			0.0000	0.0000	0.0000	0.0000
Total	**2.0600e-003**	**8.9200e-003**	**0.1270**			**2.7000e-004**	**2.7000e-004**		**2.7000e-004**	**2.7000e-004**			**15.0296**	**4.7600e-003**	**0.0000**	**15.1294**

Mitigated Construction Off-Site

	ROG	NOx	CO	SO2	Fugitive PM10	Exhaust PM10	PM10 Total	Fugitive PM2.5	Exhaust PM2.5	PM2.5 Total	Bio- CO2	NBio- CO2	Total CO2	CH4	N2O	CO2e
Category	tons/yr										MT/yr					
Hauling	0.0000	0.0000	0.0000		0.0000	0.0000	0.0000	0.0000	0.0000	0.0000			0.0000	0.0000	0.0000	0.0000
Vendor	0.0000	0.0000	0.0000		0.0000	0.0000	0.0000	0.0000	0.0000	0.0000			0.0000	0.0000	0.0000	0.0000
Worker	3.1000e-004	4.7000e-004	4.4200e-003		1.0200e-003	1.0000e-005	1.0300e-003	2.7000e-004	1.0000e-005	2.8000e-004			0.8294	4.0000e-005	0.0000	0.8303
Total	**3.1000e-004**	**4.7000e-004**	**4.4200e-003**		**1.0200e-003**	**1.0000e-005**	**1.0300e-003**	**2.7000e-004**	**1.0000e-005**	**2.8000e-004**			**0.8294**	**4.0000e-005**	**0.0000**	**0.8303**

3.6 Demolition - 2019

Unmitigated Construction On-Site

	ROG	NOx	CO	SO2	Fugitive PM10	Exhaust PM10	PM10 Total	Fugitive PM2.5	Exhaust PM2.5	PM2.5 Total	Bio- CO2	NBio- CO2	Total CO2	CH4	N2O	CO2e
Category	tons/yr										MT/yr					
Fugitive Dust					0.0148	0.0000	0.0148	2.2400e-003	0.0000	2.2400e-003			0.0000	0.0000	0.0000	0.0000
Off-Road	0.0748	0.7637	0.6931			0.0370	0.0370		0.0345	0.0345			80.2022	0.0224	0.0000	80.6725
Total	**0.0748**	**0.7637**	**0.6931**		**0.0148**	**0.0370**	**0.0518**	**2.2400e-003**	**0.0345**	**0.0367**			**80.2022**	**0.0224**	**0.0000**	**80.6725**

Unmitigated Construction Off-Site

	ROG	NOx	CO	SO2	Fugitive PM10	Exhaust PM10	PM10 Total	Fugitive PM2.5	Exhaust PM2.5	PM2.5 Total	Bio- CO2	NBio- CO2	Total CO2	CH4	N2O	CO2e
Category	tons/yr										MT/yr					
Hauling	1.3200e-003	0.0153	0.0151		1.1500e-003	2.3000e-004	1.3800e-003	3.2000e-004	2.1000e-004	5.3000e-004			4.4538	3.0000e-005	0.0000	4.4545
Vendor	0.0000	0.0000	0.0000		0.0000	0.0000	0.0000	0.0000	0.0000	0.0000			0.0000	0.0000	0.0000	0.0000
Worker	9.2000e-004	1.4000e-003	0.0133		3.0600e-003	2.0000e-005	3.0900e-003	8.1000e-004	2.0000e-005	8.4000e-004			2.4882	1.2000e-004	0.0000	2.4908
Total	**2.2400e-003**	**0.0167**	**0.0284**		**4.2100e-003**	**2.5000e-004**	**4.4700e-003**	**1.1300e-003**	**2.3000e-004**	**1.3700e-003**			**6.9420**	**1.5000e-004**	**0.0000**	**6.9452**

Mitigated Construction On-Site

	ROG	NOx	CO	SO2	Fugitive PM10	Exhaust PM10	PM10 Total	Fugitive PM2.5	Exhaust PM2.5	PM2.5 Total	Bio- CO2	NBio- CO2	Total CO2	CH4	N2O	CO2e
Category	tons/yr										MT/yr					

Fugitive Dust					0.0148	0.0000	0.0148	2.2400e-003	0.0000	2.2400e-003			0.0000	0.0000	0.0000	0.0000
Off-Road	0.0107	0.0462	0.5361			1.4200e-003	1.4200e-003		1.4200e-003	1.4200e-003			80.2021	0.0224	0.0000	80.6724
Total	**0.0107**	**0.0462**	**0.5361**		**0.0148**	**1.4200e-003**	**0.0162**	**2.2400e-003**	**1.4200e-003**	**3.6600e-003**			**80.2021**	**0.0224**	**0.0000**	**80.6724**

Mitigated Construction Off-Site

	ROG	NOx	CO	SO2	Fugitive PM10	Exhaust PM10	PM10 Total	Fugitive PM2.5	Exhaust PM2.5	PM2.5 Total	Bio- CO2	NBio- CO2	Total CO2	CH4	N2O	CO2e
Category	tons/yr										MT/yr					
Hauling	1.3200e-003	0.0153	0.0151		1.1500e-003	2.3000e-004	1.3800e-003	3.2000e-004	2.1000e-004	5.3000e-004			4.4538	3.0000e-005	0.0000	4.4545
Vendor	0.0000	0.0000	0.0000		0.0000	0.0000	0.0000	0.0000	0.0000	0.0000			0.0000	0.0000	0.0000	0.0000
Worker	9.2000e-004	1.4000e-003	0.0133		3.0600e-003	2.0000e-005	3.0900e-003	8.1000e-004	2.0000e-005	8.4000e-004			2.4882	1.2000e-004	0.0000	2.4908
Total	**2.2400e-003**	**0.0167**	**0.0284**		**4.2100e-003**	**2.5000e-004**	**4.4700e-003**	**1.1300e-003**	**2.3000e-004**	**1.3700e-003**			**6.9420**	**1.5000e-004**	**0.0000**	**6.9452**

4.0 Operational Detail - Mobile

4.1 Mitigation Measures Mobile

	ROG	NOx	CO	SO2	Fugitive PM10	Exhaust PM10	PM10 Total	Fugitive PM2.5	Exhaust PM2.5	PM2.5 Total	Bio- CO2	NBio- CO2	Total CO2	CH4	N2O	CO2e
Category	tons/yr										MT/yr					
Mitigated	0.0429	0.1516	0.5125		0.0869	2.2200e-003	0.0891	0.0234	2.0400e-003	0.0254			96.8760	3.3400e-003	0.0000	96.9460
Unmitigated	0.0429	0.1516	0.5125		0.0869	2.2200e-003	0.0891	0.0234	2.0400e-003	0.0254			96.8760	3.3400e-003	0.0000	96.9460

4.2 Trip Summary Information

	Average Daily Trip Rate			Unmitigated	Mitigated
Land Use	Weekday	Saturday	Sunday	Annual VMT	Annual VMT
User Defined Educational	67.20	67.20	67.20	232,378	232,378
Total	67.20	67.20	67.20	232,378	232,378

4.3 Trip Type Information

	Miles			Trip %			Trip Purpose %		
Land Use	H-W or C-W	H-S or C-C	H-O or C-NW	H-W or C-W	H-S or C-C	H-O or C-NW	Primary	Diverted	Pass-by
User Defined Educational	9.50	7.30	7.30	100.00	0.00	0.00	100	0	0

LDA	LDT1	LDT2	MDV	LHD1	LHD2	MHD	HHD	OBUS	UBUS	MCY	SBUS	MH
0.542590	0.062129	0.167184	0.110637	0.030730	0.004573	0.019109	0.050292	0.001784	0.003671	0.005678	0.000201	0.001421

5.0 Energy Detail

4.4 Fleet Mix

Historical Energy Use: N

5.1 Mitigation Measures Energy

	ROG	NOx	CO	SO2	Fugitive PM10	Exhaust PM10	PM10 Total	Fugitive PM2.5	Exhaust PM2.5	PM2.5 Total	Bio- CO2	NBio- CO2	Total CO2	CH4	N2O	CO2e
Category	tons/yr										MT/yr					
Electricity Mitigated						0.0000	0.0000		0.0000	0.0000			0.0000	0.0000	0.0000	0.0000
Electricity Unmitigated						0.0000	0.0000		0.0000	0.0000			0.0000	0.0000	0.0000	0.0000
NaturalGas Mitigated	0.0000	0.0000	0.0000			0.0000	0.0000		0.0000	0.0000			0.0000	0.0000	0.0000	0.0000

NaturalGas Unmitigated	0.0000	0.0000	0.0000			0.0000	0.0000		0.0000	0.0000			0.0000	0.0000	0.0000	0.0000

5.2 Energy by Land Use - NaturalGas

Unmitigated

	NaturalGas Use	ROG	NOx	CO	SO2	Fugitive PM10	Exhaust PM10	PM10 Total	Fugitive PM2.5	Exhaust PM2.5	PM2.5 Total	Bio- CO2	NBio- CO2	Total CO2	CH4	N2O	CO2e
Land Use	kBTU/yr	tons/yr										MT/yr					
User Defined Educational	0	0.0000	0.0000	0.0000			0.0000	0.0000		0.0000	0.0000			0.0000	0.0000	0.0000	0.0000
Total		**0.0000**	**0.0000**	**0.0000**			**0.0000**	**0.0000**		**0.0000**	**0.0000**			**0.0000**	**0.0000**	**0.0000**	**0.0000**

5.3 Energy by Land Use - Electricity

Unmitigated

	Electricity Use	Total CO2	CH4	N2O	CO2e
Land Use	kWh/yr	MT/yr			
User Defined Educational	4.38353e+008	0.0000	0.0000	0.0000	0.0000
Total		**0.0000**	**0.0000**	**0.0000**	**0.0000**

6.0 Area Detail

6.1 Mitigation Measures Area

	ROG	NOx	CO	SO2	Fugitive PM10	Exhaust PM10	PM10 Total	Fugitive PM2.5	Exhaust PM2.5	PM2.5 Total	Bio- CO2	NBio- CO2	Total CO2	CH4	N2O	CO2e
Category	tons/yr										MT/yr					
Mitigated	0.3212	1.0000e-005	1.1100e-003			0.0000	0.0000		0.0000	0.0000			2.1400e-003	1.0000e-005	0.0000	2.2700e-003
Unmitigated	0.3212	1.0000e-005	1.1100e-003			0.0000	0.0000		0.0000	0.0000			2.1400e-003	1.0000e-005	0.0000	2.2700e-003

6.2 Area by SubCategory

Unmitigated

	ROG	NOx	CO	SO2	Fugitive PM10	Exhaust PM10	PM10 Total	Fugitive PM2.5	Exhaust PM2.5	PM2.5 Total	Bio- CO2	NBio- CO2	Total CO2	CH4	N2O	CO2e
SubCategory	tons/yr										MT/yr					
Architectural Coating	0.0378					0.0000	0.0000		0.0000	0.0000			0.0000	0.0000	0.0000	0.0000
Consumer Products	0.2833					0.0000	0.0000		0.0000	0.0000			0.0000	0.0000	0.0000	0.0000
Landscaping	1.1000e-004	1.0000e-005	1.1100e-003			0.0000	0.0000		0.0000	0.0000			2.1400e-003	1.0000e-005	0.0000	2.2700e-003
Total	**0.3212**	**1.0000e-005**	**1.1100e-003**			**0.0000**	**0.0000**		**0.0000**	**0.0000**			**2.1400e-003**	**1.0000e-005**	**0.0000**	**2.2700e-003**

7.0 Water Detail

7.1 Mitigation Measures Water

	Total CO2	CH4	N2O	CO2e
Category	MT/yr			

Mitigated	0.7691	0.0790	1.8700e-003	3.0062
Unmitigated	0.7691	0.0790	1.8700e-003	3.0062

7.2 Water by Land Use

Unmitigated

	Indoor/Outdoor Use	Total CO2	CH4	N2O	CO2e
Land Use	Mgal	MT/yr			
User Defined Educational	2.42424 / 0	0.7691	0.0790	1.8700e-003	3.0062
Total		**0.7691**	**0.0790**	**1.8700e-003**	**3.0062**

8.0 Waste Detail

8.1 Mitigation Measures Waste

Category/Year

	Total CO2	CH4	N2O	CO2e
	MT/yr			
Mitigated	24.3589	1.4396	0.0000	54.5899
Unmitigated	24.3589	1.4396	0.0000	54.5899

8.2 Waste by Land Use

Unmitigated

	Waste Disposed	Total CO2	CH4	N2O	CO2e
Land Use	tons	MT/yr			
User Defined Educational	120	24.3589	1.4396	0.0000	54.5899
Total		**24.3589**	**1.4396**	**0.0000**	**54.5899**

9.0 Operational Offroad

Equipment Type	Number	Hours/Day	Days/Year	Horse Power	Load Factor	Fuel Type

10.0 Vegetation

Camp Sweeney

Alameda County, Winter

1.0 Project Characteristics

1.1 Land Usage

Land Uses	Size	Metric	Lot Acreage	Floor Surface Area	Population
User Defined Educational	120.00	User Defined Unit	9.98	72,527.00	120

1.2 Other Project Characteristics

Urbanization	Urban	**Wind Speed (m/s)**	2.2	**Precipitation Freq (Days)**	63
Climate Zone	5			**Operational Year**	2019
Utility Company					
CO2 Intensity (lb/MWhr)	0	**CH4 Intensity (lb/MWhr)**	0	**N2O Intensity (lb/MWhr)**	0

1.3 User Entered Comments & Non-Default Data

Project Characteristics -

Land Use - Acreage and square from applicant info. Unit amount is beds.

Construction Phase - Per schedule from applicant supplemented with model defaults wehere necessary.

Grading - Soil is anticipated to be enginnered and blanace on site with no net import/export.

Demolition -

Vehicle Trips - For a conservative analysis, all trips were assumed to be primary trips with the longest trip length type (commercial-work).

Energy Use - Per the CalEEMod instructions, energy usage for a user defined entry was determined via the CEUS database: http://capabilities.itron.com/CeusWeb/Chart.aspx. A "lodgings" use was assigned, which showed annual energy usage of 10,000 kWhr/ksq/year, which was translated to account for size in bed (0.6 ksq per bed). For a conservative analysis, this was assumed to be all electricity in new buildings (title 24).

Water And Wastewater - Water usage calculated using Pacific Institute “Waste Not Want Not” report per CallEEMod methodologies with the closest use being "hotel".

Solid Waste - Approximatley 1 ton per bed per year.

Construction Off-road Equipment Mitigation - Tier 4 construction equipment used.

Table Name	Column Name	Default Value	New Value
tblConstEquipMitigation	NumberOfEquipmentMitigated	0.00	1.00
tblConstEquipMitigation	NumberOfEquipmentMitigated	0.00	4.00
tblConstEquipMitigation	NumberOfEquipmentMitigated	0.00	1.00
tblConstEquipMitigation	NumberOfEquipmentMitigated	0.00	1.00
tblConstEquipMitigation	NumberOfEquipmentMitigated	0.00	3.00
tblConstEquipMitigation	NumberOfEquipmentMitigated	0.00	1.00
tblConstEquipMitigation	NumberOfEquipmentMitigated	0.00	2.00
tblConstEquipMitigation	NumberOfEquipmentMitigated	0.00	2.00
tblConstEquipMitigation	NumberOfEquipmentMitigated	0.00	6.00
tblConstEquipMitigation	NumberOfEquipmentMitigated	0.00	10.00
tblConstEquipMitigation	NumberOfEquipmentMitigated	0.00	1.00
tblConstEquipMitigation	NumberOfEquipmentMitigated	0.00	2.00
tblConstEquipMitigation	NumberOfEquipmentMitigated	0.00	1.00
tblConstEquipMitigation	Tier	No Change	Tier 4 Final
tblConstEquipMitigation	Tier	No Change	Tier 4 Final
tblConstEquipMitigation	Tier	No Change	Tier 4 Final
tblConstEquipMitigation	Tier	No Change	Tier 4 Final
tblConstEquipMitigation	Tier	No Change	Tier 4 Final
tblConstEquipMitigation	Tier	No Change	Tier 4 Final
tblConstEquipMitigation	Tier	No Change	Tier 4 Final
tblConstEquipMitigation	Tier	No Change	Tier 4 Final
tblConstEquipMitigation	Tier	No Change	Tier 4 Final
tblConstEquipMitigation	Tier	No Change	Tier 4 Final
tblConstEquipMitigation	Tier	No Change	Tier 4 Final
tblConstEquipMitigation	Tier	No Change	Tier 4 Final
tblConstEquipMitigation	Tier	No Change	Tier 4 Final
tblConstructionPhase	NumDays	230.00	475.00
tblConstructionPhase	NumDays	20.00	45.00

tblConstructionPhase	NumDays	20.00	150.00
tblConstructionPhase	NumDays	20.00	15.00
tblConstructionPhase	NumDays	10.00	20.00
tblConstructionPhase	PhaseStartDate	11/25/2017	11/27/2017
tblConstructionPhase	PhaseStartDate	10/12/2019	10/14/2019
tblConstructionPhase	PhaseStartDate	4/29/2017	5/1/2017
tblConstructionPhase	PhaseStartDate	9/21/2019	9/23/2019
tblEnergyUse	T24E	0.00	6,044.00
tblGrading	AcresOfGrading	65.00	3.10
tblGrading	AcresOfGrading	0.00	3.10
tblLandUse	LandUseSquareFeet	0.00	72,527.00
tblLandUse	LotAcreage	0.00	9.98
tblLandUse	Population	0.00	120.00
tblProjectCharacteristics	OperationalYear	2014	2019
tblSolidWaste	SolidWasteGenerationRate	0.00	120.00
tblVehicleTrips	CW_TTP	0.00	100.00
tblVehicleTrips	PR_TP	0.00	100.00
tblVehicleTrips	ST_TR	0.00	0.56
tblVehicleTrips	SU_TR	0.00	0.56
tblVehicleTrips	WD_TR	0.00	0.56
tblWater	IndoorWaterUseRate	0.00	2,424,240.00

2.0 Emissions Summary

2.1 Overall Construction (Maximum Daily Emission)

Unmitigated Construction

	ROG	NOx	CO	SO2	Fugitive PM10	Exhaust PM10	PM10 Total	Fugitive PM2.5	Exhaust PM2.5	PM2.5 Total	Bio- CO2	NBio-CO2	Total CO2	CH4	N2O	CO2e

Year	lb/day										lb/day					
2017	4.9035	51.8533	40.3066		18.4004	2.7556	21.1559	9.9935	2.5351	12.5286			4,159.4436	1.2350	0.0000	4,185.3787
2018	2.9067	24.4075	20.8475		0.3630	1.5111	1.8741	0.0979	1.4203	1.5182			3,138.1573	0.6539	0.0000	3,151.8885
2019	3.4292	34.6994	32.2349		0.8504	1.6561	2.5065	0.1513	1.5419	1.6933			4,268.0873	1.1051	0.0000	4,291.2934
Total	**11.2393**	**110.9601**	**93.3890**		**19.6138**	**5.9228**	**25.5365**	**10.2427**	**5.4973**	**15.7401**			**11,565.6882**	**2.9939**	**0.0000**	**11,628.5606**

Mitigated Construction

	ROG	NOx	CO	SO2	Fugitive PM10	Exhaust PM10	PM10 Total	Fugitive PM2.5	Exhaust PM2.5	PM2.5 Total	Bio- CO2	NBio-CO2	Total CO2	CH4	N2O	CO2e
Year	lb/day										lb/day					
2017	0.5864	3.4958	22.1510		18.4004	0.0648	18.4651	9.9935	0.0647	10.0581			4,159.4436	1.2350	0.0000	4,185.3787
2018	0.5645	3.3755	20.7259		0.3630	0.0575	0.4205	0.0979	0.0561	0.1541			3,138.1573	0.6539	0.0000	3,151.8885
2019	0.5808	3.2748	25.2556		0.8504	0.0745	0.9249	0.1513	0.0736	0.2249			4,268.0873	1.1051	0.0000	4,291.2934
Total	**1.7316**	**10.1461**	**68.1325**		**19.6138**	**0.1967**	**19.8105**	**10.2427**	**0.1943**	**10.4371**			**11,565.6882**	**2.9939**	**0.0000**	**11,628.5605**

	ROG	**NOx**	**CO**	**SO2**	**Fugitive PM10**	**Exhaust PM10**	**PM10 Total**	**Fugitive PM2.5**	**Exhaust PM2.5**	**PM2.5 Total**	**Bio- CO2**	**NBio-CO2**	**Total CO2**	**CH4**	**N20**	**CO2e**
Percent Reduction	**84.59**	**90.86**	**27.04**	**0.00**	**0.00**	**96.68**	**22.42**	**0.00**	**96.46**	**33.69**	**0.00**	**0.00**	**0.00**	**0.00**	**0.00**	**0.00**

2.2 Overall Operational

Unmitigated Operational

	ROG	NOx	CO	SO2	Fugitive PM10	Exhaust PM10	PM10 Total	Fugitive PM2.5	Exhaust PM2.5	PM2.5 Total	Bio- CO2	NBio-CO2	Total CO2	CH4	N2O	CO2e

Category	lb/day										lb/day					
Area	1.7605	1.1000e-004	0.0124			4.0000e-005	4.0000e-005		4.0000e-005	4.0000e-005			0.0263	7.0000e-005		0.0278
Energy	0.0000	0.0000	0.0000			0.0000	0.0000		0.0000	0.0000			0.0000	0.0000	0.0000	0.0000
Mobile	0.2518	0.8627	3.1102		0.4958	0.0122	0.5080	0.1328	0.0113	0.1441			583.9688	0.0202		584.3939
Total	**2.0123**	**0.8628**	**3.1226**		**0.4958**	**0.0123**	**0.5081**	**0.1328**	**0.0113**	**0.1441**			**583.9950**	**0.0203**	**0.0000**	**584.4216**

3.0 Construction Detail

Construction Phase

Phase Number	Phase Name	Phase Type	Start Date	End Date	Num Days Week	Num Days	Phase Description
1	Site Preparation	Site Preparation	4/3/2017	4/28/2017	5	20	
2	Grading	Grading	5/1/2017	11/24/2017	5	150	
3	Building Construction	Building Construction	11/27/2017	9/20/2019	5	475	
4	Paving	Paving	9/23/2019	10/11/2019	5	15	
5	Demolition	Demolition	10/14/2019	12/13/2019	5	45	

Acres of Grading (Site Preparation Phase): 3.1

Acres of Grading (Grading Phase): 3.1

Acres of Paving: 0

Residential Indoor: 0; Residential Outdoor: 0; Non-Residential Indoor: 0; Non-Residential Outdoor: 0 (Architectural Coating – sqft)

OffRoad Equipment

Phase Name	Offroad Equipment Type	Amount	Usage Hours	Horse Power	Load Factor
Demolition	Excavators	3	8.00	162	0.38
Demolition	Concrete/Industrial Saws	1	8.00	81	0.73
Grading	Excavators	1	8.00	162	0.38
Building Construction	Cranes	1	7.00	226	0.29

Building Construction	Forklifts	3	8.00	89	0.20
Building Construction	Generator Sets	1	8.00	84	0.74
Paving	Pavers	2	8.00	125	0.42
Paving	Rollers	2	8.00	80	0.38
Demolition	Rubber Tired Dozers	2	8.00	255	0.40
Grading	Rubber Tired Dozers	1	8.00	255	0.40
Building Construction	Tractors/Loaders/Backhoes	3	7.00	97	0.37
Grading	Graders	1	8.00	174	0.41
Grading	Tractors/Loaders/Backhoes	3	8.00	97	0.37
Paving	Paving Equipment	2	8.00	130	0.36
Site Preparation	Tractors/Loaders/Backhoes	4	8.00	97	0.37
Site Preparation	Rubber Tired Dozers	3	8.00	255	0.40
Building Construction	Welders	1	8.00	46	0.45

Trips and VMT

Phase Name	Offroad Equipment Count	Worker Trip Number	Vendor Trip Number	Hauling Trip Number	Worker Trip Length	Vendor Trip Length	Hauling Trip Length	Worker Vehicle Class	Vendor Vehicle Class	Hauling Vehicle Class
Demolition	6	15.00	0.00	136.00	12.40	7.30	20.00	LD_Mix	HDT_Mix	HHDT
Site Preparation	7	18.00	0.00	0.00	12.40	7.30	20.00	LD_Mix	HDT_Mix	HHDT
Grading	6	15.00	0.00	0.00	12.40	7.30	20.00	LD_Mix	HDT_Mix	HHDT
Building Construction	9	30.00	12.00	0.00	12.40	7.30	20.00	LD_Mix	HDT_Mix	HHDT
Paving	6	15.00	0.00	0.00	12.40	7.30	20.00	LD_Mix	HDT_Mix	HHDT

3.1 Mitigation Measures Construction

Use Cleaner Engines for Construction Equipment

Clean Paved Roads

3.2 Site Preparation - 2017

Unmitigated Construction On-Site

	ROG	NOx	CO	SO2	Fugitive PM10	Exhaust PM10	PM10 Total	Fugitive PM2.5	Exhaust PM2.5	PM2.5 Total	Bio- CO2	NBio-CO2	Total CO2	CH4	N2O	CO2e
Category	lb/day										lb/day					
Fugitive Dust					18.2306	0.0000	18.2306	9.9484	0.0000	9.9484			0.0000			0.0000
Off-Road	4.8382	51.7535	39.3970			2.7542	2.7542		2.5339	2.5339			4,003.0859	1.2265		4,028.8432
Total	**4.8382**	**51.7535**	**39.3970**		**18.2306**	**2.7542**	**20.9849**	**9.9484**	**2.5339**	**12.4823**			**4,003.0859**	**1.2265**		**4,028.8432**

Unmitigated Construction Off-Site

	ROG	NOx	CO	SO2	Fugitive PM10	Exhaust PM10	PM10 Total	Fugitive PM2.5	Exhaust PM2.5	PM2.5 Total	Bio- CO2	NBio-CO2	Total CO2	CH4	N2O	CO2e
Category	lb/day										lb/day					
Hauling	0.0000	0.0000	0.0000		0.0000	0.0000	0.0000	0.0000	0.0000	0.0000			0.0000	0.0000		0.0000
Vendor	0.0000	0.0000	0.0000		0.0000	0.0000	0.0000	0.0000	0.0000	0.0000			0.0000	0.0000		0.0000
Worker	0.0653	0.0998	0.9095		0.1698	1.3300e-003	0.1711	0.0450	1.2200e-003	0.0462			156.3577	8.4700e-003		156.5355
Total	**0.0653**	**0.0998**	**0.9095**		**0.1698**	**1.3300e-003**	**0.1711**	**0.0450**	**1.2200e-003**	**0.0462**			**156.3577**	**8.4700e-003**		**156.5355**

Mitigated Construction On-Site

	ROG	NOx	CO	SO2	Fugitive PM10	Exhaust PM10	PM10 Total	Fugitive PM2.5	Exhaust PM2.5	PM2.5 Total	Bio- CO2	NBio-CO2	Total CO2	CH4	N2O	CO2e
Category	lb/day										lb/day					

Fugitive Dust					18.2306	0.0000	18.2306	9.9484	0.0000	9.9484			0.0000			0.0000
Off-Road	0.4757	2.0615	21.2415			0.0634	0.0634		0.0634	0.0634			4,003.0859	1.2265		4,028.8432
Total	**0.4757**	**2.0615**	**21.2415**		**18.2306**	**0.0634**	**18.2941**	**9.9484**	**0.0634**	**10.0119**			**4,003.0859**	**1.2265**		**4,028.8432**

Mitigated Construction Off-Site

	ROG	NOx	CO	SO2	Fugitive PM10	Exhaust PM10	PM10 Total	Fugitive PM2.5	Exhaust PM2.5	PM2.5 Total	Bio- CO2	NBio-CO2	Total CO2	CH4	N2O	CO2e
Category	lb/day										lb/day					
Hauling	0.0000	0.0000	0.0000		0.0000	0.0000	0.0000	0.0000	0.0000	0.0000			0.0000	0.0000		0.0000
Vendor	0.0000	0.0000	0.0000		0.0000	0.0000	0.0000	0.0000	0.0000	0.0000			0.0000	0.0000		0.0000
Worker	0.0653	0.0998	0.9095		0.1698	1.3300e-003	0.1711	0.0450	1.2200e-003	0.0462			156.3577	8.4700e-003		156.5355
Total	**0.0653**	**0.0998**	**0.9095**		**0.1698**	**1.3300e-003**	**0.1711**	**0.0450**	**1.2200e-003**	**0.0462**			**156.3577**	**8.4700e-003**		**156.5355**

3.3 Grading - 2017

Unmitigated Construction On-Site

	ROG	NOx	CO	SO2	Fugitive PM10	Exhaust PM10	PM10 Total	Fugitive PM2.5	Exhaust PM2.5	PM2.5 Total	Bio- CO2	NBio-CO2	Total CO2	CH4	N2O	CO2e
Category	lb/day										lb/day					
Fugitive Dust					5.2411	0.0000	5.2411	2.8712	0.0000	2.8712			0.0000			0.0000
Off-Road	3.4555	35.9825	25.3812			2.0388	2.0388		1.8757	1.8757			3,043.6667	0.9326		3,063.2507
Total	**3.4555**	**35.9825**	**25.3812**		**5.2411**	**2.0388**	**7.2799**	**2.8712**	**1.8757**	**4.7469**			**3,043.6667**	**0.9326**		**3,063.2507**

Unmitigated Construction Off-Site

	ROG	NOx	CO	SO2	Fugitive PM10	Exhaust PM10	PM10 Total	Fugitive PM2.5	Exhaust PM2.5	PM2.5 Total	Bio- CO2	NBio-CO2	Total CO2	CH4	N2O	CO2e
Category	lb/day										lb/day					
Hauling	0.0000	0.0000	0.0000		0.0000	0.0000	0.0000	0.0000	0.0000	0.0000			0.0000	0.0000		0.0000
Vendor	0.0000	0.0000	0.0000		0.0000	0.0000	0.0000	0.0000	0.0000	0.0000			0.0000	0.0000		0.0000
Worker	0.0544	0.0832	0.7579		0.1415	1.1100e-003	0.1426	0.0375	1.0200e-003	0.0385			130.2981	7.0500e-003		130.4462
Total	**0.0544**	**0.0832**	**0.7579**		**0.1415**	**1.1100e-003**	**0.1426**	**0.0375**	**1.0200e-003**	**0.0385**			**130.2981**	**7.0500e-003**		**130.4462**

Mitigated Construction On-Site

	ROG	NOx	CO	SO2	Fugitive PM10	Exhaust PM10	PM10 Total	Fugitive PM2.5	Exhaust PM2.5	PM2.5 Total	Bio- CO2	NBio-CO2	Total CO2	CH4	N2O	CO2e
Category	lb/day										lb/day					
Fugitive Dust					5.2411	0.0000	5.2411	2.8712	0.0000	2.8712			0.0000			0.0000
Off-Road	0.3625	1.5709	19.6566			0.0483	0.0483		0.0483	0.0483			3,043.6667	0.9326		3,063.2507
Total	**0.3625**	**1.5709**	**19.6566**		**5.2411**	**0.0483**	**5.2894**	**2.8712**	**0.0483**	**2.9196**			**3,043.6667**	**0.9326**		**3,063.2507**

Mitigated Construction Off-Site

	ROG	NOx	CO	SO2	Fugitive PM10	Exhaust PM10	PM10 Total	Fugitive PM2.5	Exhaust PM2.5	PM2.5 Total	Bio- CO2	NBio-CO2	Total CO2	CH4	N2O	CO2e
Category	lb/day										lb/day					
Hauling	0.0000	0.0000	0.0000		0.0000	0.0000	0.0000	0.0000	0.0000	0.0000			0.0000	0.0000		0.0000
Vendor	0.0000	0.0000	0.0000		0.0000	0.0000	0.0000	0.0000	0.0000	0.0000			0.0000	0.0000		0.0000
Worker	0.0544	0.0832	0.7579		0.1415	1.1100e-003	0.1426	0.0375	1.0200e-003	0.0385			130.2981	7.0500e-003		130.4462
Total	**0.0544**	**0.0832**	**0.7579**		**0.1415**	**1.1100e-003**	**0.1426**	**0.0375**	**1.0200e-003**	**0.0385**			**130.2981**	**7.0500e-003**		**130.4462**

3.4 Building Construction - 2017

Unmitigated Construction On-Site

	ROG	NOx	CO	SO2	Fugitive PM10	Exhaust PM10	PM10 Total	Fugitive PM2.5	Exhaust PM2.5	PM2.5 Total	Bio- CO2	NBio-CO2	Total CO2	CH4	N2O	CO2e
Category	lb/day										lb/day					
Off-Road	3.1024	26.4057	18.1291			1.7812	1.7812		1.6730	1.6730			2,639.8053	0.6497		2,653.4490
Total	**3.1024**	**26.4057**	**18.1291**			**1.7812**	**1.7812**		**1.6730**	**1.6730**			**2,639.8053**	**0.6497**		**2,653.4490**

Unmitigated Construction Off-Site

	ROG	NOx	CO	SO2	Fugitive PM10	Exhaust PM10	PM10 Total	Fugitive PM2.5	Exhaust PM2.5	PM2.5 Total	Bio- CO2	NBio-CO2	Total CO2	CH4	N2O	CO2e
Category	lb/day										lb/day					
Hauling	0.0000	0.0000	0.0000		0.0000	0.0000	0.0000	0.0000	0.0000	0.0000			0.0000	0.0000		0.0000

Vendor	0.1512	1.1006	2.0490		0.0801	0.0159	0.0960	0.0229	0.0146	0.0375			282.1674	2.2400e-003		282.2146
Worker	0.1088	0.1664	1.5159		0.2829	2.2100e-003	0.2851	0.0750	2.0400e-003	0.0771			260.5962	0.0141		260.8925
Total	**0.2599**	**1.2670**	**3.5648**		**0.3630**	**0.0181**	**0.3811**	**0.0979**	**0.0167**	**0.1146**			**542.7636**	**0.0164**		**543.1071**

Mitigated Construction On-Site

	ROG	NOx	CO	SO2	Fugitive PM10	Exhaust PM10	PM10 Total	Fugitive PM2.5	Exhaust PM2.5	PM2.5 Total	Bio- CO2	NBio-CO2	Total CO2	CH4	N2O	CO2e
Category	lb/day										lb/day					
Off-Road	0.3265	2.2289	17.4110			0.0406	0.0406		0.0406	0.0406			2,639.8053	0.6497		2,653.4490
Total	**0.3265**	**2.2289**	**17.4110**			**0.0406**	**0.0406**		**0.0406**	**0.0406**			**2,639.8053**	**0.6497**		**2,653.4490**

Mitigated Construction Off-Site

	ROG	NOx	CO	SO2	Fugitive PM10	Exhaust PM10	PM10 Total	Fugitive PM2.5	Exhaust PM2.5	PM2.5 Total	Bio- CO2	NBio-CO2	Total CO2	CH4	N2O	CO2e
Category	lb/day										lb/day					
Hauling	0.0000	0.0000	0.0000		0.0000	0.0000	0.0000	0.0000	0.0000	0.0000			0.0000	0.0000		0.0000
Vendor	0.1512	1.1006	2.0490		0.0801	0.0159	0.0960	0.0229	0.0146	0.0375			282.1674	2.2400e-003		282.2146
Worker	0.1088	0.1664	1.5159		0.2829	2.2100e-003	0.2851	0.0750	2.0400e-003	0.0771			260.5962	0.0141		260.8925
Total	**0.2599**	**1.2670**	**3.5648**		**0.3630**	**0.0181**	**0.3811**	**0.0979**	**0.0167**	**0.1146**			**542.7636**	**0.0164**		**543.1071**

3.4 Building Construction - 2018

Unmitigated Construction On-Site

	ROG	NOx	CO	SO2	Fugitive PM10	Exhaust PM10	PM10 Total	Fugitive PM2.5	Exhaust PM2.5	PM2.5 Total	Bio- CO2	NBio-CO2	Total CO2	CH4	N2O	CO2e
Category	lb/day										lb/day					
Off-Road	2.6687	23.2608	17.5327			1.4943	1.4943		1.4048	1.4048			2,609.9390	0.6387		2,623.3517
Total	**2.6687**	**23.2608**	**17.5327**			**1.4943**	**1.4943**		**1.4048**	**1.4048**			**2,609.9390**	**0.6387**		**2,623.3517**

Unmitigated Construction Off-Site

	ROG	NOx	CO	SO2	Fugitive PM10	Exhaust PM10	PM10 Total	Fugitive PM2.5	Exhaust PM2.5	PM2.5 Total	Bio- CO2	NBio-CO2	Total CO2	CH4	N2O	CO2e
Category	lb/day										lb/day					
Hauling	0.0000	0.0000	0.0000		0.0000	0.0000	0.0000	0.0000	0.0000	0.0000			0.0000	0.0000		0.0000
Vendor	0.1417	0.9970	1.9680		0.0801	0.0147	0.0948	0.0229	0.0135	0.0365			277.3031	2.2100e-003		277.3494
Worker	0.0963	0.1497	1.3468		0.2829	2.1300e-003	0.2850	0.0750	1.9700e-003	0.0770			250.9153	0.0130		251.1874
Total	**0.2380**	**1.1466**	**3.3149**		**0.3630**	**0.0169**	**0.3799**	**0.0979**	**0.0155**	**0.1135**			**528.2184**	**0.0152**		**528.5368**

Mitigated Construction On-Site

	ROG	NOx	CO	SO2	Fugitive PM10	Exhaust PM10	PM10 Total	Fugitive PM2.5	Exhaust PM2.5	PM2.5 Total	Bio- CO2	NBio-CO2	Total CO2	CH4	N2O	CO2e
Category	lb/day										lb/day					
Off-Road	0.3265	2.2289	17.4110			0.0406	0.0406		0.0406	0.0406			2,609.9389	0.6387		2,623.3517
Total	**0.3265**	**2.2289**	**17.4110**			**0.0406**	**0.0406**		**0.0406**	**0.0406**			**2,609.9389**	**0.6387**		**2,623.3517**

Mitigated Construction Off-Site

	ROG	NOx	CO	SO2	Fugitive PM10	Exhaust PM10	PM10 Total	Fugitive PM2.5	Exhaust PM2.5	PM2.5 Total	Bio- CO2	NBio-CO2	Total CO2	CH4	N2O	CO2e
Category	lb/day										lb/day					
Hauling	0.0000	0.0000	0.0000		0.0000	0.0000	0.0000	0.0000	0.0000	0.0000			0.0000	0.0000		0.0000
Vendor	0.1417	0.9970	1.9680		0.0801	0.0147	0.0948	0.0229	0.0135	0.0365			277.3031	2.2100e-003		277.3494
Worker	0.0963	0.1497	1.3468		0.2829	2.1300e-003	0.2850	0.0750	1.9700e-003	0.0770			250.9153	0.0130		251.1874
Total	**0.2380**	**1.1466**	**3.3149**		**0.3630**	**0.0169**	**0.3799**	**0.0979**	**0.0155**	**0.1135**			**528.2184**	**0.0152**		**528.5368**

3.4 Building Construction - 2019

Unmitigated Construction On-Site

	ROG	NOx	CO	SO2	Fugitive PM10	Exhaust PM10	PM10 Total	Fugitive PM2.5	Exhaust PM2.5	PM2.5 Total	Bio- CO2	NBio-CO2	Total CO2	CH4	N2O	CO2e
Category	lb/day										lb/day					
Off-Road	2.3516	20.9650	17.1204			1.2850	1.2850		1.2083	1.2083			2,580.7618	0.6279		2,593.9479

Total	**2.3516**	**20.9650**	**17.1204**			**1.2850**	**1.2850**		**1.2083**	**1.2083**			**2,580.7618**	**0.6279**		**2,593.9479**

Unmitigated Construction Off-Site

	ROG	NOx	CO	SO2	Fugitive PM10	Exhaust PM10	PM10 Total	Fugitive PM2.5	Exhaust PM2.5	PM2.5 Total	Bio- CO2	NBio-CO2	Total CO2	CH4	N2O	CO2e
Category	lb/day										lb/day					
Hauling	0.0000	0.0000	0.0000		0.0000	0.0000	0.0000	0.0000	0.0000	0.0000			0.0000	0.0000		0.0000
Vendor	0.1288	0.9095	1.8736		0.0801	0.0137	0.0938	0.0229	0.0126	0.0355			272.5105	2.1600e-003		272.5557
Worker	0.0874	0.1364	1.2187		0.2829	2.0900e-003	0.2850	0.0750	1.9300e-003	0.0770			241.9057	0.0121		242.1587
Total	**0.2162**	**1.0459**	**3.0923**		**0.3630**	**0.0158**	**0.3787**	**0.0979**	**0.0145**	**0.1125**			**514.4162**	**0.0142**		**514.7144**

Mitigated Construction On-Site

	ROG	NOx	CO	SO2	Fugitive PM10	Exhaust PM10	PM10 Total	Fugitive PM2.5	Exhaust PM2.5	PM2.5 Total	Bio- CO2	NBio-CO2	Total CO2	CH4	N2O	CO2e
Category	lb/day										lb/day					
Off-Road	0.3265	2.2289	17.4110			0.0406	0.0406		0.0406	0.0406			2,580.7618	0.6279		2,593.9479
Total	**0.3265**	**2.2289**	**17.4110**			**0.0406**	**0.0406**		**0.0406**	**0.0406**			**2,580.7618**	**0.6279**		**2,593.9479**

Mitigated Construction Off-Site

	ROG	NOx	CO	SO2	Fugitive PM10	Exhaust PM10	PM10 Total	Fugitive PM2.5	Exhaust PM2.5	PM2.5 Total	Bio- CO2	NBio-CO2	Total CO2	CH4	N2O	CO2e
Category	lb/day										lb/day					
Hauling	0.0000	0.0000	0.0000		0.0000	0.0000	0.0000	0.0000	0.0000	0.0000			0.0000	0.0000		0.0000
Vendor	0.1288	0.9095	1.8736		0.0801	0.0137	0.0938	0.0229	0.0126	0.0355			272.5105	2.1600e-003		272.5557
Worker	0.0874	0.1364	1.2187		0.2829	2.0900e-003	0.2850	0.0750	1.9300e-003	0.0770			241.9057	0.0121		242.1587
Total	**0.2162**	**1.0459**	**3.0923**		**0.3630**	**0.0158**	**0.3787**	**0.0979**	**0.0145**	**0.1125**			**514.4162**	**0.0142**		**514.7144**

3.5 Paving - 2019

Unmitigated Construction On-Site

	ROG	NOx	CO	SO2	Fugitive PM10	Exhaust PM10	PM10 Total	Fugitive PM2.5	Exhaust PM2.5	PM2.5 Total	Bio- CO2	NBio-CO2	Total CO2	CH4	N2O	CO2e
Category	lb/day										lb/day					
Off-Road	1.4259	14.9353	14.3652			0.8094	0.8094		0.7447	0.7447			2,208.9731	0.6989		2,223.6499
Paving	0.0000					0.0000	0.0000		0.0000	0.0000			0.0000			0.0000
Total	**1.4259**	**14.9353**	**14.3652**			**0.8094**	**0.8094**		**0.7447**	**0.7447**			**2,208.9731**	**0.6989**		**2,223.6499**

Unmitigated Construction Off-Site

	ROG	NOx	CO	SO2	Fugitive PM10	Exhaust PM10	PM10 Total	Fugitive PM2.5	Exhaust PM2.5	PM2.5 Total	Bio- CO2	NBio-CO2	Total CO2	CH4	N2O	CO2e

Category	lb/day										lb/day					
Hauling	0.0000	0.0000	0.0000		0.0000	0.0000	0.0000	0.0000	0.0000	0.0000			0.0000	0.0000		0.0000
Vendor	0.0000	0.0000	0.0000		0.0000	0.0000	0.0000	0.0000	0.0000	0.0000			0.0000	0.0000		0.0000
Worker	0.0437	0.0682	0.6094		0.1415	1.0400e-003	0.1425	0.0375	9.7000e-004	0.0385			120.9529	6.0200e-003		121.0793
Total	**0.0437**	**0.0682**	**0.6094**		**0.1415**	**1.0400e-003**	**0.1425**	**0.0375**	**9.7000e-004**	**0.0385**			**120.9529**	**6.0200e-003**		**121.0793**

Mitigated Construction On-Site

	ROG	NOx	CO	SO2	Fugitive PM10	Exhaust PM10	PM10 Total	Fugitive PM2.5	Exhaust PM2.5	PM2.5 Total	Bio- CO2	NBio-CO2	Total CO2	CH4	N2O	CO2e
Category	lb/day										lb/day					
Off-Road	0.2745	1.1895	16.9276			0.0366	0.0366		0.0366	0.0366			2,208.9731	0.6989		2,223.6499
Paving	0.0000					0.0000	0.0000		0.0000	0.0000			0.0000			0.0000
Total	**0.2745**	**1.1895**	**16.9276**			**0.0366**	**0.0366**		**0.0366**	**0.0366**			**2,208.9731**	**0.6989**		**2,223.6499**

Mitigated Construction Off-Site

	ROG	NOx	CO	SO2	Fugitive PM10	Exhaust PM10	PM10 Total	Fugitive PM2.5	Exhaust PM2.5	PM2.5 Total	Bio- CO2	NBio-CO2	Total CO2	CH4	N2O	CO2e
Category	lb/day										lb/day					
Hauling	0.0000	0.0000	0.0000		0.0000	0.0000	0.0000	0.0000	0.0000	0.0000			0.0000	0.0000		0.0000
Vendor	0.0000	0.0000	0.0000		0.0000	0.0000	0.0000	0.0000	0.0000	0.0000			0.0000	0.0000		0.0000

Worker	0.0437	0.0682	0.6094		0.1415	1.0400e-003	0.1425	0.0375	9.7000e-004	0.0385			120.9529	6.0200e-003		121.0793
Total	**0.0437**	**0.0682**	**0.6094**		**0.1415**	**1.0400e-003**	**0.1425**	**0.0375**	**9.7000e-004**	**0.0385**			**120.9529**	**6.0200e-003**		**121.0793**

3.6 Demolition - 2019

Unmitigated Construction On-Site

	ROG	NOx	CO	SO2	Fugitive PM10	Exhaust PM10	PM10 Total	Fugitive PM2.5	Exhaust PM2.5	PM2.5 Total	Bio- CO2	NBio-CO2	Total CO2	CH4	N2O	CO2e
Category	lb/day										lb/day					
Fugitive Dust					0.6562	0.0000	0.6562	0.0994	0.0000	0.0994			0.0000			0.0000
Off-Road	3.3224	33.9413	30.8050			1.6448	1.6448		1.5316	1.5316			3,929.2327	1.0974		3,952.2774
Total	**3.3224**	**33.9413**	**30.8050**		**0.6562**	**1.6448**	**2.3010**	**0.0994**	**1.5316**	**1.6309**			**3,929.2327**	**1.0974**		**3,952.2774**

Unmitigated Construction Off-Site

	ROG	NOx	CO	SO2	Fugitive PM10	Exhaust PM10	PM10 Total	Fugitive PM2.5	Exhaust PM2.5	PM2.5 Total	Bio- CO2	NBio-CO2	Total CO2	CH4	N2O	CO2e
Category	lb/day										lb/day					
Hauling	0.0632	0.6899	0.8205		0.0527	0.0102	0.0630	0.0144	9.4100e-003	0.0239			217.9018	1.6600e-003		217.9366
Vendor	0.0000	0.0000	0.0000		0.0000	0.0000	0.0000	0.0000	0.0000	0.0000			0.0000	0.0000		0.0000
Worker	0.0437	0.0682	0.6094		0.1415	1.0400e-003	0.1425	0.0375	9.7000e-004	0.0385			120.9529	6.0200e-003		121.0793
Total	**0.1069**	**0.7581**	**1.4299**		**0.1942**	**0.0113**	**0.2055**	**0.0520**	**0.0104**	**0.0623**			**338.8546**	**7.6800e-003**		**339.0160**

Mitigated Construction On-Site

	ROG	NOx	CO	SO2	Fugitive PM10	Exhaust PM10	PM10 Total	Fugitive PM2.5	Exhaust PM2.5	PM2.5 Total	Bio- CO2	NBio-CO2	Total CO2	CH4	N2O	CO2e
Category	lb/day										lb/day					
Fugitive Dust					0.6562	0.0000	0.6562	0.0994	0.0000	0.0994			0.0000			0.0000
Off-Road	0.4739	2.0535	23.8257			0.0632	0.0632		0.0632	0.0632			3,929.2327	1.0974		3,952.2774
Total	**0.4739**	**2.0535**	**23.8257**		**0.6562**	**0.0632**	**0.7194**	**0.0994**	**0.0632**	**0.1625**			**3,929.2327**	**1.0974**		**3,952.2774**

Mitigated Construction Off-Site

	ROG	NOx	CO	SO2	Fugitive PM10	Exhaust PM10	PM10 Total	Fugitive PM2.5	Exhaust PM2.5	PM2.5 Total	Bio- CO2	NBio-CO2	Total CO2	CH4	N2O	CO2e
Category	lb/day										lb/day					
Hauling	0.0632	0.6899	0.8205		0.0527	0.0102	0.0630	0.0144	9.4100e-003	0.0239			217.9018	1.6600e-003		217.9366
Vendor	0.0000	0.0000	0.0000		0.0000	0.0000	0.0000	0.0000	0.0000	0.0000			0.0000	0.0000		0.0000
Worker	0.0437	0.0682	0.6094		0.1415	1.0400e-003	0.1425	0.0375	9.7000e-004	0.0385			120.9529	6.0200e-003		121.0793
Total	**0.1069**	**0.7581**	**1.4299**		**0.1942**	**0.0113**	**0.2055**	**0.0520**	**0.0104**	**0.0623**			**338.8546**	**7.6800e-003**		**339.0160**

4.0 Operational Detail - Mobile

4.1 Mitigation Measures Mobile

	ROG	NOx	CO	SO2	Fugitive PM10	Exhaust PM10	PM10 Total	Fugitive PM2.5	Exhaust PM2.5	PM2.5 Total	Bio- CO2	NBio-CO2	Total CO2	CH4	N2O	CO2e
Category	lb/day										lb/day					
Mitigated	0.2518	0.8627	3.1102		0.4958	0.0122	0.5080	0.1328	0.0113	0.1441			583.9688	0.0202		584.3939
Unmitigated	0.2518	0.8627	3.1102		0.4958	0.0122	0.5080	0.1328	0.0113	0.1441			583.9688	0.0202		584.3939

4.2 Trip Summary Information

	Average Daily Trip Rate			Unmitigated	Mitigated
Land Use	Weekday	Saturday	Sunday	Annual VMT	Annual VMT
User Defined Educational	67.20	67.20	67.20	232,378	232,378
Total	67.20	67.20	67.20	232,378	232,378

4.3 Trip Type Information

	Miles			Trip %			Trip Purpose %		
Land Use	H-W or C-W	H-S or C-C	H-O or C-NW	H-W or C-W	H-S or C-C	H-O or C-NW	Primary	Diverted	Pass-by
User Defined Educational	9.50	7.30	7.30	100.00	0.00	0.00	100	0	0

LDA	LDT1	LDT2	MDV	LHD1	LHD2	MHD	HHD	OBUS	UBUS	MCY	SBUS	MH
0.542590	0.062129	0.167184	0.110637	0.030730	0.004573	0.019109	0.050292	0.001784	0.003671	0.005678	0.000201	0.001421

5.0 Energy Detail

4.4 Fleet Mix

Historical Energy Use: N

5.1 Mitigation Measures Energy

	ROG	NOx	CO	SO2	Fugitive PM10	Exhaust PM10	PM10 Total	Fugitive PM2.5	Exhaust PM2.5	PM2.5 Total	Bio- CO2	NBio- CO2	Total CO2	CH4	N2O	CO2e
Category	lb/day										lb/day					
NaturalGas Mitigated	0.0000	0.0000	0.0000			0.0000	0.0000		0.0000	0.0000			0.0000	0.0000	0.0000	0.0000
NaturalGas Unmitigated	0.0000	0.0000	0.0000			0.0000	0.0000		0.0000	0.0000			0.0000	0.0000	0.0000	0.0000

5.2 Energy by Land Use - NaturalGas

Unmitigated

	NaturalGas Use	ROG	NOx	CO	SO2	Fugitive PM10	Exhaust PM10	PM10 Total	Fugitive PM2.5	Exhaust PM2.5	PM2.5 Total	Bio- CO2	NBio- CO2	Total CO2	CH4	N2O	CO2e
Land Use	kBTU/yr	lb/day										lb/day					
User Defined Educational	0	0.0000	0.0000	0.0000			0.0000	0.0000		0.0000	0.0000			0.0000	0.0000	0.0000	0.0000
Total		**0.0000**	**0.0000**	**0.0000**			**0.0000**	**0.0000**		**0.0000**	**0.0000**			**0.0000**	**0.0000**	**0.0000**	**0.0000**

6.0 Area Detail

6.1 Mitigation Measures Area

	ROG	NOx	CO	SO2	Fugitive PM10	Exhaust PM10	PM10 Total	Fugitive PM2.5	Exhaust PM2.5	PM2.5 Total	Bio- CO2	NBio- CO2	Total CO2	CH4	N2O	CO2e

Category	lb/day										lb/day					
Mitigated	1.7605	1.1000e-004	0.0124			4.0000e-005	4.0000e-005		4.0000e-005	4.0000e-005			0.0263	7.0000e-005		0.0278
Unmitigated	1.7605	1.1000e-004	0.0124			4.0000e-005	4.0000e-005		4.0000e-005	4.0000e-005			0.0263	7.0000e-005		0.0278

6.2 Area by SubCategory

Unmitigated

	ROG	NOx	CO	SO2	Fugitive PM10	Exhaust PM10	PM10 Total	Fugitive PM2.5	Exhaust PM2.5	PM2.5 Total	Bio- CO2	NBio-CO2	Total CO2	CH4	N2O	CO2e
SubCategory	lb/day										lb/day					
Architectural Coating	0.2072					0.0000	0.0000		0.0000	0.0000			0.0000			0.0000
Consumer Products	1.5521					0.0000	0.0000		0.0000	0.0000			0.0000			0.0000
Landscaping	1.1700e-003	1.1000e-004	0.0124			4.0000e-005	4.0000e-005		4.0000e-005	4.0000e-005			0.0263	7.0000e-005		0.0278
Total	**1.7605**	**1.1000e-004**	**0.0124**			**4.0000e-005**	**4.0000e-005**		**4.0000e-005**	**4.0000e-005**			**0.0263**	**7.0000e-005**		**0.0278**

7.0 Water Detail

7.1 Mitigation Measures Water

8.0 Waste Detail

8.1 Mitigation Measures Waste

9.0 Operational Offroad

Equipment Type	Number	Hours/Day	Days/Year	Horse Power	Load Factor	Fuel Type

10.0 Vegetation

Construction-Period Health Risk Assessment
Calculations for Diesel Particulate Matter (DPM) Cancer Risk,
DPM Non-Cancer Hazard and PM 2.5 Exposure

Camp Sweeney Project

CANCER RISK:

1. CalEEMod Output

Specifics of construction phases were entered into CalEEMod. Default assumptions regarding construction equipment were used except that tier 4 engines were assumed. CalEEMod projected PM10 levels of 0.0199 short tons for the construction period.

2. AERSCREEN

The average yearly emissions rate from the CalEEMod output was converted to grams/second (0.0002 g/s) then entered into AERSCREEN using model defaults for a worst-case screening level analysis per the attached AERSCREEN output file.

This resulted in a maximum 1-hour concentration of 0.4193 $\mu g/m^3$, which would occur at a distance of approximately 100 meters.

3. Scaling to Annual

GLC = (X1-hour) (Scalar)

Where GLC is the annual average ground level concentration.

The maximum 1-hour concentration from the AERSCREEN output was then multiplied by the BAAQMD recommended hourly to annual Scalar of 0.1 for the following:

GLC = (0.4193 µg/m3) (0.1)

Ground Level Concentration = 0.0419 µg/m3

4. Calculate Risk

This GLC was used as the concentration in air ("C air") for calculation of inhalation dose as follows:

Inhalation Dose = $(C\ air*DBR*A*EF*ED*1x10^{-6})/AT$

DBR = daily breathing rate = 335

A = inhalation absorption rate for DPM = 1

EF = Exposure frequency = 250 days/yr (assuming 5 days a week for 50 weeks for the entire year)

ED = Exposure duration = 2.7 years (full construction period)

AT = Averaging time = 25,550 (for a 70 year cancer risk)

Inhalation Dose = (0.0419) (335) (1) (250) (2.7) (10^-6) / 25550

Inhalation Dose = 3.711E-07

And from there calculated the Inhalation Cancer Risk:

Inhalation Cancer Potency factor (for DPM) = 1.1

Inhalation Cancer Risk per million = (Inhalation Dose)*Inhalation Cancer Potency factor*10^6

Inhalation Cancer Risk per million = (3.711E-07)*1.1*10^6

<u>Inhalation Cancer Risk per million (adult) = 0.408 - compared to Threshold of 10.000</u>

Because an infant could be exposed during the construction, an age sensitivity factor of 10 is used.

Inhalation Cancer Risk * ASF = risk adjusted for age sensitivity

0.408*10 = 4.08

<u>Inhalation Cancer Risk per million (infant) = 4.08 compared to Threshold of 10.00</u>

This screening level analysis is below threshold levels and therefore further modeling would not be required to make conclusions. (Note that screening analyses such as this are intended to overestimate risk to determine if further modeling would be required and are not expected to estimate actual risk.)

FOR CHRONIC NON-HAZARD:

Hazard Quotient = C air/REL

REL = DPM inhalation non-cancer chronic (long-term) reference exposure level = 5 $\mu g/m^3$

Hazard Quotient = 0.0419 / 5.0

<u>Hazard Quotient = 0.008 compared to Threshold of 1.000</u>

FOR PM2.5

CalEEMod projected PM2.5 levels of 0.002 short tons for the construction period, which is the same as for PM10 analysis above.

As noted above, AERSCREEN modeled the Ground Level Concentration at 0.0419 µg/m3.

<u>Annual Average PM2.5 concentration of 0.042 $\mu g/m^3$ compared to the threshold of 0.300 $\mu g/m^3$</u>

This screening level analysis is below threshold levels and therefore further modeling would not be required to make conclusions. (Note that screening analyses such as this are intended to overestimate risk to determine if further modeling would be required and are not expected to estimate actual risk.)

AERSCREEN 14147 / AERMOD 14134 10/16/15
16:03:00

TITLE: CAMP SWEENEY PM10

********** AREA PARAMETERS **********

SOURCE EMISSION RATE:	0.200E-03 g/s	0.159E-02 lb/hr
AREA EMISSION RATE:	0.133E-07 g/(s-m2)	0.105E-06 lb/(hr-m2)
AREA HEIGHT:	3.00 meters	9.84 feet
AREA SOURCE LONG SIDE:	232.00 meters	761.15 feet
AREA SOURCE SHORT SIDE:	65.00 meters	213.25 feet
INITIAL VERTICAL DIMENSION:	3.00 meters	9.84 feet
RURAL OR URBAN:	URBAN	
POPULATION:	90000	
INITIAL PROBE DISTANCE =	5000. meters	16404. feet

********** BUILDING DOWNWASH PARAMETERS **********

BUILDING DOWNWASH NOT USED FOR NON-POINT SOURCES

********** FLOW SECTOR ANALYSIS **********
25 meter receptor spacing: 1. meters - 5000. meters

MAXIMUM IMPACT RECEPTOR

Zo SECTOR	SURFACE ROUGHNESS	1-HR CONC (ug/m3)	RADIAL (deg)	DIST (m)	TEMPORAL PERIOD
1*	1.000	0.4193	0	100.0	WIN

* = worst case diagonal

********** MAKEMET METEOROLOGY PARAMETERS **********

MIN/MAX TEMPERATURE: 250.0 / 310.0 (K)

MINIMUM WIND SPEED: 0.5 m/s

ANEMOMETER HEIGHT: 10.000 meters

SURFACE CHARACTERISTICS INPUT: AERMET SEASONAL TABLES

DOMINANT SURFACE PROFILE: Urban
DOMINANT CLIMATE TYPE: Average Moisture

sweeney_PM10

DOMINANT SEASON: Winter

ALBEDO: 0.35
BOWEN RATIO: 1.50
ROUGHNESS LENGTH: 1.000 (meters)

METEOROLOGY CONDITIONS USED TO PREDICT OVERALL MAXIMUM IMPACT

YR	MO	DY	JDY	HR
10	01	10	10	01

H0	U*	W*	DT/DZ	ZICNV	ZIMCH	M-O LEN	Z0	BOWEN	ALBEDO	REF WS
-1.30	0.043	-9.000	0.020	-999.	21.	6.0	1.000	1.50	0.35	0.50

HT	REF TA	HT
10.0	310.0	2.0

METEOROLOGY CONDITIONS USED TO PREDICT AMBIENT BOUNDARY IMPACT

YR	MO	DY	JDY	HR
10	01	10	10	01

H0	U*	W*	DT/DZ	ZICNV	ZIMCH	M-O LEN	Z0	BOWEN	ALBEDO	REF WS
-1.30	0.043	-9.000	0.020	-999.	21.	6.0	1.000	1.50	0.35	0.50

HT	REF TA	HT
10.0	310.0	2.0

********** AERSCREEN AUTOMATED DISTANCES **********

OVERALL MAXIMUM CONCENTRATIONS BY DISTANCE

DIST (m)	MAXIMUM 1-HR CONC (ug/m3)	DIST (m)	MAXIMUM 1-HR CONC (ug/m3)
1.00	0.3451	2525.00	0.5926E-02
25.00	0.3687	2550.00	0.5883E-02
50.00	0.3887	2575.00	0.5840E-02
75.00	0.4052	2600.00	0.5798E-02
100.00	0.4193	2625.00	0.5757E-02
125.00	0.3729	2650.00	0.5717E-02
150.00	0.2590	2675.00	0.5677E-02
175.00	0.1916	2700.00	0.5639E-02
200.00	0.1550	2725.00	0.5601E-02
225.00	0.1291	2750.00	0.5564E-02
250.00	0.1101	2775.00	0.5527E-02
275.00	0.9554E-01	2800.00	0.5491E-02
300.00	0.8405E-01	2825.00	0.5456E-02

325.00	0.7483E-01	2850.00	0.5421E-02
350.00	0.6725E-01	2875.00	0.5387E-02
375.00	0.6092E-01	2900.00	0.5354E-02
400.00	0.5560E-01	2925.00	0.5321E-02
425.00	0.5104E-01	2950.00	0.5288E-02
450.00	0.4706E-01	2975.00	0.5256E-02
475.00	0.4360E-01	3000.00	0.5225E-02
500.00	0.4058E-01	3025.00	0.5194E-02
525.00	0.3791E-01	3050.00	0.5164E-02
550.00	0.3554E-01	3074.99	0.5134E-02
575.00	0.3340E-01	3100.00	0.5104E-02
600.00	0.3147E-01	3125.00	0.5075E-02
625.00	0.2974E-01	3150.00	0.5046E-02
650.00	0.2817E-01	3175.00	0.5018E-02
675.00	0.2673E-01	3200.00	0.4990E-02
700.00	0.2542E-01	3225.00	0.4963E-02
725.00	0.2422E-01	3250.00	0.4936E-02
750.00	0.2311E-01	3275.00	0.4909E-02
775.00	0.2210E-01	3300.00	0.4883E-02
800.00	0.2115E-01	3325.00	0.4857E-02
825.00	0.2028E-01	3350.00	0.4831E-02
850.00	0.1946E-01	3375.00	0.4806E-02
875.00	0.1871E-01	3400.00	0.4781E-02
900.00	0.1800E-01	3425.00	0.4756E-02
925.00	0.1735E-01	3450.00	0.4732E-02
950.00	0.1673E-01	3475.00	0.4708E-02
975.00	0.1616E-01	3500.00	0.4684E-02
1000.00	0.1562E-01	3525.00	0.4661E-02
1025.00	0.1512E-01	3550.00	0.4638E-02
1050.00	0.1464E-01	3575.00	0.4615E-02
1075.00	0.1420E-01	3600.00	0.4592E-02
1100.00	0.1378E-01	3625.00	0.4570E-02
1125.00	0.1339E-01	3650.00	0.4548E-02
1150.00	0.1301E-01	3675.00	0.4526E-02
1175.00	0.1266E-01	3700.00	0.4505E-02
1200.00	0.1233E-01	3725.00	0.4484E-02
1225.00	0.1202E-01	3750.00	0.4463E-02
1250.00	0.1172E-01	3775.00	0.4442E-02
1275.00	0.1144E-01	3800.00	0.4421E-02
1300.00	0.1117E-01	3825.00	0.4401E-02
1325.00	0.1092E-01	3850.00	0.4381E-02
1350.00	0.1068E-01	3875.00	0.4361E-02
1375.00	0.1047E-01	3900.00	0.4342E-02
1400.00	0.1025E-01	3925.00	0.4322E-02
1425.00	0.1005E-01	3950.00	0.4303E-02
1450.00	0.9848E-02	3975.00	0.4284E-02
1475.00	0.9661E-02	4000.00	0.4265E-02
1500.00	0.9483E-02	4025.00	0.4247E-02
1525.00	0.9312E-02	4050.00	0.4228E-02
1550.00	0.9150E-02	4075.00	0.4210E-02
1575.00	0.8995E-02	4100.00	0.4192E-02
1600.00	0.8847E-02	4125.00	0.4174E-02
1625.00	0.8705E-02	4150.00	0.4157E-02
1650.00	0.8569E-02	4175.00	0.4139E-02
1675.00	0.8439E-02	4200.00	0.4122E-02
1700.00	0.8315E-02	4225.00	0.4105E-02
1725.00	0.8196E-02	4250.00	0.4088E-02
1750.00	0.8081E-02	4275.00	0.4071E-02
1775.00	0.7971E-02	4300.00	0.4054E-02
1800.00	0.7865E-02	4325.00	0.4038E-02
1825.00	0.7764E-02	4350.00	0.4022E-02
1850.00	0.7666E-02	4375.00	0.4006E-02
1875.00	0.7571E-02	4400.00	0.3990E-02

1900.00	0.7480E-02	4425.00	0.3974E-02
1924.99	0.7393E-02	4450.00	0.3958E-02
1950.00	0.7308E-02	4475.00	0.3943E-02
1975.00	0.7226E-02	4500.00	0.3927E-02
2000.00	0.7147E-02	4525.00	0.3912E-02
2025.00	0.7071E-02	4550.00	0.3897E-02
2050.00	0.6997E-02	4575.00	0.3882E-02
2075.00	0.6925E-02	4600.00	0.3867E-02
2100.00	0.6856E-02	4625.00	0.3853E-02
2125.00	0.6788E-02	4650.00	0.3838E-02
2150.00	0.6723E-02	4675.00	0.3824E-02
2175.00	0.6660E-02	4700.00	0.3810E-02
2200.00	0.6598E-02	4725.00	0.3795E-02
2225.00	0.6538E-02	4750.00	0.3781E-02
2250.00	0.6480E-02	4775.00	0.3768E-02
2275.00	0.6423E-02	4800.00	0.3754E-02
2300.00	0.6367E-02	4825.00	0.3740E-02
2325.00	0.6314E-02	4850.00	0.3727E-02
2350.00	0.6261E-02	4875.00	0.3713E-02
2375.00	0.6210E-02	4900.00	0.3700E-02
2400.00	0.6160E-02	4925.00	0.3687E-02
2425.00	0.6111E-02	4950.00	0.3674E-02
2450.00	0.6063E-02	4975.00	0.3661E-02
2475.00	0.6017E-02	5000.00	0.3648E-02
2500.00	0.5971E-02		

********** AERSCREEN MAXIMUM IMPACT SUMMARY **********

3-hour, 8-hour, and 24-hour scaled
concentrations are equal to the 1-hour concentration as referenced in
SCREENING PROCEDURES FOR ESTIMATING THE AIR QUALITY
IMPACT OF STATIONARY SOURCES, REVISED (Section 4.5.4)
Report number EPA-454/R-92-019
http://www.epa.gov/scram001/guidance_permit.htm
under Screening Guidance

CALCULATION PROCEDURE	MAXIMUM 1-HOUR CONC (ug/m3)	SCALED 3-HOUR CONC (ug/m3)	SCALED 8-HOUR CONC (ug/m3)	SCALED 24-HOUR CONC (ug/m3)	SCALED ANNUAL CONC (ug/m3)
FLAT TERRAIN	0.4278	0.4278	0.4278	0.4278	N/A

DISTANCE FROM SOURCE 117.00 meters

IMPACT AT THE AMBIENT BOUNDARY	0.3451	0.3451	0.3451	0.3451	N/A

DISTANCE FROM SOURCE 1.00 meters

Appendix C

Camp Wilmont Sweeney, Alameda County

Historic Resource Evaluation

Preservation Architecture

August 12, 2015

PRESERVATION
ARCHITECTURE

August 12, 2015

Camp Wilmont Sweeney, Alameda County
Historic Resource Evaluation

Introduction

This report evaluates the potential historical significance of a property – herein referred to as Camp Sweeney – owned and operated by the County of Alameda, located in the San Leandro Hills, and which houses and serves juvenile boys on disciplinary probation. Camp Sweeney consists of five original buildings, dating to 1957-58, and a later building dating to the mid-1970s. The five older buildings and their associated property are the subject of this historic resource evaluation. The 1976 building is not of an age to be evaluated. However, an additional and adjunct building, dating to 1953 and built as a part of a former Juvenile Hall complex that preceded and stood adjacent to Camp Sweeney, is also re-evaluated herein (fig.1).

The historic evaluation prepared for a 2003 EIS/EIR for the Juvenile Justice Center Project found that the 1953 Juvenile Hall was determined eligible for the California Register of Historical Resources (CR). Yet, of the original 1953 Juvenile Hall buildings, only two survive: the Gymnasium (1953, Kent & Hass, architects), and a smaller residential-like structure, Snedigar Cottage, which stood and remains further downhill.

Being less than 45 years of age when the Juvenile Hall was evaluated for historic significance, Camp Sweeney was not then evaluated (nor was another adjacent camp, known as Las Vistas – which was added to the overall site subsequent to Camp Sweeney and, in fact, designed by the same architect, Chester Treichel). The current effort has been requested in order to evaluate the potential historical significance of the Camp Sweeney buildings and property along with the adjunct Gymnasium building with respect to their eligibility for the CR.

This evaluation effort has been based on two site visits, the collections of available property and design-related documentation from the County of Alameda General Services Administration; collection and review of previous environmental review documentation concerning the former Juvenile Hall; collection and review of historic resource information from the State Office of Historic Preservation, Northwest Information Center for the former Alameda County Juvenile Hall; research visits to local archives and libraries, including the Oakland Cultural Heritage Survey and the Oakland History Room, and the Environmental Design Library at U.C. Berkeley; plus on-line research.

Summary History

The development known today as Camp Wilmont Sweeney was created in 1957-1958 by Alameda County for use as a reform-style juvenile detention campus for boys that originally consisted of five of the six extent buildings aligned northwest to southeast along an internal entry road and which dead-ends at the east end of the camp's buildings. Those five original buildings included a Superintendent's Residence, an Administration Building, a Dormitory, a Dining Hall and a Recreation Hall. All except the residence remain in use with limited physical or functional change. The residence is now used for storage. The Recreation Hall was the only 2-story structure, and which housed classrooms in a lower level that is currently used for recreational purposes, including a workout room.

Prior to its construction, the subject property was operated by Alameda County as a farm for the raising of animals and crops to serve the County's hospitals – one of which, Fairmont Hospital, has long stood directly below and to the southwest of Camp Sweeney. In the early 1950s, the adjoining

446 17th Street #302 Oakland 94612
510 418 0285 mhulbert@earthlink.net

land directly to the northwest, which had also been a part of the county farm, was developed into a large, multi-building Juvenile Hall complex.

At the time of its construction, Camp Sweeney was originally named the Senior Boys Camp. Several other juvenile justice facilities were built subsequent to the Senior Boy's Camp, including Las Vistas (1959-62), a probation camp for girls; and Chabot Ranch (1965), a camp for younger boys.

In the 1970s, Camp Sweeney's original training program was mandated to give way to formal education. Thus, in 1976, a classroom building (Ishimaru, O'Neill & Simmons, architects) was added to the campus and, at that time, the camp was renamed Los Cerros Educational Facilities. In the late 1990s, the camp was again renamed, this time in honor of an Alameda County juvenile court judge, Wilmont Sweeney.

Camp Sweeney was created as a low security probation camp for the housing, treatment, training and schooling of male-juvenile offenders (then labeled "delinquents"). Evidence shows that, along with juvenile halls of justice, probation camps – rural and urban – have existed since the early 1900s in California. Statewide, juvenile reform schools date back to early statehood, and in 1890, the state formally opened two such schools, the Whittier State Reformatory in Los Angeles County and the Preston School of Industry in Amador County. In 1913, the Ventura School for Girls was opened and, in 1931, the state authorized counties to establish forestry camps for delinquent youth.[1]

By 1941, with the California Youth Correction Authority Act, a new era of corrections was underway. Fed by fast-changing demographics along with changing concepts of juvenile delinquency, the development of juvenile reform facilities expanded in the World War II period and thereafter – with the wars end and the closing of military camps adding substantially to their demand.

Currently, California counties operate some 67 probation camps and ranches, of which Sweeney is a "conventional model" camp – securely fenced, within which a grouping of buildings and yards serve the camp's administrative, housing, dining, training/educational and recreational functions. Sweeney is currently 1 of approximately 52 such conventional county-operated camps in California and the only one in Alameda County. A few other conventional camps within adjacent counties include Log Cabin Ranch, San Francisco, 1941; Fouts Springs Camp, Solano County, 1959; and James Boy's Ranch, Santa Clara, 1956; and the Orin Allen Youth Rehabilitation facility in Contra Costa County.[2]

Descriptions

Camp Sweeney's setting is upon a broad slope directly above a major freeway (580) in the hills of San Leandro (fig.1). The Camp sits along a bench with the west-east road at its center and with buildings on each side, uphill (to the northeast) and downhill (to the southwest). Of the original five buildings, three are on the uphill side – the Administration, Dormitory and Dining Hall buildings – and the other two stand opposite on the downhill side, along with the later classroom building (fig.2). The roadway thus forms a central spine to the campus, and along which social and recreational spaces occur (fig.3). The geographic center of the campus is formed by the two largest buildings – the Dormitory and Recreation Hall – standing directly opposite and facing one another across an informal plaza that lies in between. Around and between the buildings on each side of the drive are landscaped spaces, along which the three north side buildings are linked by a concrete walkway (fig.4). To the north of and behind the uphill buildings, the hills rise somewhat steeply and consisting largely of trees, ground plantings and grasses (fig.5). At the south side, behind the central Recreation Building, the site opens out to a large flat area with a set of ball fields (fig.6). At the far (east) end of the campus, just past the Dining Hall and the Classroom Building, the road turns uphill,

[1] State of California Division of Juvenile Justice, History of the DJJ, @http://www.cdcr.ca.gov/Juvenile_Justice/DJJ_History/.

[2] Marcus Nieto, County Probation Camps and Ranches for Juvenile Offenders. California Research Bureau, Nov. 2008.

where there are miscellaneous structures that remain from the days when the camp husbanded animals and crops (fig.7). Today, that former farm-like yard is now a service yard.

In late-2000, the former Juvenile Hall complex, including its 1970s additions and also including Chabot Ranch, were removed. After the new Juvenile Justice Center was built, the entry road into Camp Sweeney was altered, as was a ball field that existed along that entry road. Remnants of that road and ball field are in evidence today to the north of the entry road and below the massive retaining walls that support the new Juvenile Center site (fig.8).

Today, though perhaps not originally, the Camp is surrounded by a high fence with security features. The present fence was added in 2007. Outside the camp and directly to the east is a large and open hillside which is still partly in use for farming (fig.9). Downhill, to the south, are several complexes of County owned buildings, including both Las Vistas and, further downhill, Fairmont Hospital. To the west and along the entry road is the new Juvenile Justice Center, uphill and to the north, and the Gymnasium Building or the otherwise empty site of the former Juvenile Hall to the south.

The 1957-58 Camp Sweeney buildings are rudimentary and highly functional structures constructed of concrete block exterior walls and double-pitched, low-slope, overhanging roofs. The Administration (figs.10), Dormitory (fig.11) and former Residence (fig.12) are long and low buildings, the central dorm exceedingly so. The Recreation Hall, though itself long on its uphill side, is the only 2-story and thus vertical structure, at least at its sloping sides and rear (figs.13-14). The Dining Hall is T-shaped (figs.15-16).

Other typical building elements are metal windows, some with wood frames and some with concrete block sills (Dorm and Dining buildings), and most with plastered aprons. Several uniquely large windows are located in the gabled ends of the Dining and Recreation buildings. Doors are wood and wood framed. The deeply overhung roofs have internal gutters behind wide and canted wood fascia boards. Exterior building systems (lighting, power, fire protection) are exposed and utilitarian.

Interior construction consists of concrete block walls; exposed pitched roof/ceiling structures, some with applied acoustic tiles and most with skylights; floors are concrete slabs with linoleum flooring; and exposed and utilitarian building system components (lighting, heating and ventilation, fire protection, etc.). Each building interior has its own particular functional arrangement: the Administration Building is subdivided into office areas in a double-loaded arrangement; the Dormitory is open with four sleeping quadrants, a central supervisorial station, and a central toilet and shower room cluster; the Dining Hall has a large open dining space and a cafeteria style kitchen in the back wing; and the main level of the Recreation Building is open yet with a built-in platform area that serves as a stage.

Identifiable alterations include:

- At the Administration building, an extension at its west end and an addition at the rear;
- At the Dormitory, an infill addition at the east end of the rear roof overhang, and additional structure (lally columns) supporting the gabled overhang at its east end;
- At the Dining Hall, an extension at the north end of the dining room space;
- Interior structural retrofitting at the Recreation Hall;
- Enclosure of the original carport and an extension at the southern end of the former Residence.

The site partly functioned as a farm, with crops and animals. Those functions have been reduced over the years, but the gardening component is still partly extant.

As noted, the Gymnasium building today stands alone in the eastern corner of the large open parcel along the south side of the entry road into the Camp Sweeney property, yet outside the Camp's

gates and fencing, the gym provides a set of indoor ball courts (ex: basketball, volleyball, etc.) and other gym functions (ex: boxing room) that are not available in the recreation building on site.

The Gymnasium (figs.17-18) is a poured-in-place concrete building with a high-gabled roof over the gym space, the span of which is steel framed with a wood frame roof assembly atop. Adjunct space is housed in lower appendages at the building's west end, which are flat-roofed. Those appendages include small vestibules that were once part of enclosed walkways to the former adjoining buildings. Windows are steel, and many of the operable units have security screens. Doors are also steel. The interior court space has a wood gym floor striped for many different court configurations. The low, north spaces, one of which houses a boxing ring, are subdivided from the gym by wood and glazed partitions. Lighting and building system equipment is exposed and utilitarian.

Architects

Chester H. Treichel

The architect of its 1957-58 buildings, Chester H. Treichel (1905-1981), was an Oakland architect whose career was focused on modest residences, most dating to the 1930s, predominately in the Oakland environs but also in Berkeley and on the San Francisco peninsula. There is little specific historical information available on Treichel or his projects. In the course of the 1930s, several of his projects received attention in news articles in the Oakland Tribune, a number of which were brief mentions about residential designs for the contemporaneous Oakmore Highlands development in the Oakland Hills. The commentary and the few illustrations included in those news briefs are of modest homes in academic Colonial styles – "Spanish," "Old California," "Monterey Colonial," "Early English," etc. Additionally, the 1936 and 1937 construction periodical, Pacific Construction, announced contracts for dozens of such residential works by Treichel, most identified by address, and which has allowed some research into the character of his work in that period. That character is plain and conservative, affordable building design and that was entirely derivative of earlier styles, as noted above.

In addition to the several Tribune articles, throughout the course of the 1930s, Treichel was regularly mentioned in a magazine focused on Western architecture – The Architect & Engineer. In each case, he received mention under the heading ""With the Architects," which were monthly announcements (ex: "Chester Treichel Busy" and "Designing Many Residences") that was information provided by the architects themselves. The earliest announced that Treichel, formerly with the San Francisco architects Weeks and Day, had opened an Oakland office (A&E, Sept. 1929, p111). Shortly thereafter, another such brief announced an association between Treichel and Herbert E. Goodpastor in the firm of Treichel and Goodpastor.[3]

Treichel's obituary recognized him as having been a "prominent Oakland architect and civic leader," yet acknowledged only his work as "architectural supervisor" for a number of Bay Area buildings that predated his independent practice, and in fact made no mention of any of his independent works.[4]

With respect to Camp Sweeney, Treichel's identification as the architect is based on a set of sketch plans and elevations, one sheet each for each of the five individual buildings, labeled "Senior Boys Camp, Alameda County, California," all dated December 18, 1956 (attached). No other drawings have been located. Each sheet includes a sketch plan and elevation that closely relate to the built products, with the exception of the Administration Building, which is substantially shorter than the built structure.

---

[3] The Architect & Engineer, July 1931, p83.

[4] Oakland Tribune, 8/18/1981, pB2.

No other mention of the design or construction of the Senior Boys Camp has been located, and the only contemporaneous reference to Treichel or to any of his projects in the period of the 1950s include a 1955 announcement for the design of a church with architect Donald Power Smith.

Thus, his only related work of this period is the nearby Las Vistas "Home for Girls," which is a 3-unit complex that was designed and constructed over a three year period, the first unit opened in 1959, the second in 1961, and the third in 1962. Those buildings – sited in series and set within landscaped and recreational spaces – are matching, ranch-style, pinwheel-plan buildings with low roofs and deep overhangs.

Andrew T. Hass, Kent & Hass

The following is excerpted from the evaluation of the former Alameda County Juvenile Hall:[5]

"The son of a cabinetmaker, Andrew T. Hass (1896-1979) practiced architecture in the Bay Area between the 1920s and the 1950s. He resided in Alameda from 1920 to 1955, later moving to Los Gatos. Hass opened an office in San Francisco in 1924 with partner Thomas Kent (who was related to him by marriage), operating under the name Kent & Hass for much of his career. Working alone and with Kent, Hass is known to have designed structures in San Francisco, Oakland, Alameda, the Sacramento Valley, and Lake Tahoe. His work in San Francisco included office remodels for stockbrokers such as Dean Whitter & Co. The Oakland Cultural Heritage Survey characterizes his work in that city as "mostly large Period Revival houses." He also served as one of the consulting architects for the Oakland - San Francisco Bay Bridge.

Hass designed numerous buildings in Alameda, including houses, office buildings, and schools. His houses from the 1920s and 1930s display a variety of Period Revival styles, such as Spanish Colonial Revival, Norman Revival, and Colonial Revival. His two major office buildings in Alameda – the three-story Times-Star Building (1947) and the one-story East Bay Municipal Utility District Building (1949) – are both reinforced-concrete structures with a functional feeling and vestiges of Moderne detailing. His principal commissions in Alameda were done for various departments of the city government. These include a monumental Moderne style electric substation (1936) and seven schools erected between the late 1930s and the late 1950s. Six of the schools are still used as schools; one has been converted into a senior center. For the most part they are low, stucco-clad structures with generous amounts of windows , unpretentious buildings that fit quietly into their neighborhood settings. Stylistically, they range from a lightly ornamented prewar Moderne to a more functional postwar modernism. Hass also collaborated on the design of the city's first public housing project, Woodstock (1941). Alameda County Juvenile Hall was probably his single largest commission."

Evaluations

As previously evaluated, the former Alameda County Juvenile Hall was identified to have been one of the most ambitious juvenile detention projects in CA in the post-1940 period, and was thus an important representation of that period of CA history. That evaluation was specific to the Juvenile Hall complex. Though acknowledging that the Senior Boys and Las Vistas camps were "major additions" to the Juvenile Hall complex, no evaluation was then undertaken to identify if either camp had potential significance on the basis of their association to the former Juvenile Hall. In the meantime, the former Juvenile Hall complex was removed leaving only the Gymnasium standing (along with an adjunct structure). Evidently, the historical relationship between that building, the Gymnasium, and its former complex has been severed. Today, it is a freestanding structure with a part-time gym function and which no longer serves the Juvenile Hall. Like the Gym, whatever relationship the Senior Boys and Las Vistas camps had with Juvenile Hall, whether historically important or not, is moot, as

[5] Alameda County Juvenile Hall Department of Parks and Recreation form 523A/L, November 2002, p7.

their association to the historic Juvenile Hall has also been severed and lost.

Consequently, Camp Sweeney is a stand-alone probation campus for boys, and must be evaluated on that basis and in that context. Towards that end, the following applies the four CR criteria to determine if Camp Sweeney and/or the Gymnasium building are CR eligible and thus, whether or not they are individually and/or collectively historic resources for the purposes of the California Environmental Quality Act.

To be eligible for listing on the CR, a resource must be historically significant at the local, state, or national level, under one or more of the following four criteria:

1. *It is associated with events that have made a significant contribution to the broad patterns of local or regional history, or the cultural heritage of California or the United States.*

   Probation camps and ranches were a part of State (and National) culture throughout the 1900s. The 1950s did not invent or reinvent the use. That use is basic: to administer, house, feed, teach and recreate juvenile offenders in an isolated or semi-isolated setting with varying degrees of security.

2. *It is associated with the lives of persons important to local, California, or national history.*

   As was previously found with respect to the former Alameda County Juvenile Hall, Camp Sweeney is not identifiably, directly associated with historically significant persons. Therefore Camp Sweeney and the Gymnasium building do not meet CR Criterion 2.

3. *It embodies the distinctive characteristics of a type, period, region, or method or construction, or represents the work of a master, or possesses high artistic values.*

   Camp Sweeney

   The extant camp was constructed for a rudimentary set of uses: administration in the form of a small office building, housing in the form of a minimum security dormitory, a dining hall, a recreation building that incorporated classrooms, and a superintendent's residence. The resulting institutional structures were and are highly functional, their construction is also highly durable. There was no invention or unique exploration of forms or functions.

   While the Sweeney and Las Vistas campuses may be considered additions to the 1953 Juvenile Hall complex, those three complexes stood and, to the extent they remain, still stand independent of each other formally, physically and functionally. Though Treichel designed both of the camps, there is no apparent planning or any architectural relationship between them, so they do not form a whole greater or more meaningful than the two individual parts. That the former Juvenile Hall complex has been largely obliterated without essentially altering the character of either of the two camps is direct proof of the disassociation of the individual campuses. Moreover, that the primary facility has been largely demolished prohibits any overall comprehension of these adjacent building complexes.

   The Camp Sweeney property and buildings embody rudimentary and basic institutional planning and design:

   - The site is designed around a central roadway that links the linear complex. The character of the road, social and recreational spaces, and on-site circulation are functional: asphalt paved roadway and parking at each side, concrete paths and stairs with pipe railings, telephone poles and trees along with low landscaping along the roadway, a flagpole on the bank in front of the Dormitory, and grassy areas with some mature trees around the buildings. While some relatively natural areas remain, especially the hill above, the site design is with-

out noteworthy character or features. In fact, aside from the hard surfaced and semi-natural areas, most of the site features are probably of more recent age, including the surrounding fences. Another particular example is the oak tree patio at the classroom, which is a quality and good looking outdoor area, yet which is associated with the 1976 building. Finally, there is no identifiable landscape architect or designer.

- The building designs are likewise highly functional. While their simplified forms and materials are clearly modern, the building style is utilitarian, rather than Modernistic, and to the extent that they are dutiful late-postwar institutional building design rather than aspired architecture.

Thus, the Camp Sweeney property and buildings do not embody any identifiably historic or distinctive uses, design or architecture. Moreover, based on the summary of his known career provided herein, the architect Chester H. Treichel has no potential to be identified as an architect of historic importance. Therefore, Camp Sweeney does not meet CR Criterion 3.

Gymnasium

This building was previously evaluated as a part of the previous Alameda County Juvenile Hall complex (1953, Kent & Hass, architects) that, until c2008, included four interconnected buildings plus additions to the complex made in 1972. Three of those 1953 buildings were removed leaving only the gymnasium building with its remnant linkages to the previous structures.

In 2002, the 1953 juvenile hall complex was identified as eligible for the CA Register and potentially eligible for the National Register (Minor and Basin Associates, 2002) on the basis of its being:

- One of the most ambitious juvenile detentions projects in CA in the decade following World War II;
- A major example of institutional work by the architectural form Kent & Hass;
- A functional, modernist and prison-like design conveying the essence of juvenile-hall design in CA in the post-war decade, and the culture's pre-occupation with crime and repressiveness during the Cold War era.

Each of these bases for historical and architectural significance are, in turn, based on the former Juvenile Hall complex, which consisted of four original parts: an administration building; a Boy's Unit and a Girl's Unit; and the Gymnasium (plus the adjunct Snedigar Cottage). The four main buildings formed a cluster that were interconnected by securely enclosed passageways. The complex formed a functional whole. Even after expansion in 1972, the 1953 grouping remained whole, its integrity intact.

As the gym building stands today, it is a surviving remnant of the historic Juvenile Hall complex. Yet, without the associated buildings that it once belonged to, the Juvenile Hall entity is incomprehensible. Today, this is a freestanding gym building without former associations. And while vestiges of its two former passageways remain, those too are insensible without the adjoining complex of functionally and architecturally associated buildings. The Gymnasium also stands separate from the adjoining camps Sweeney and Las Vistas, without any visible or functional relationship (yet understanding that it is used by Camp Sweeney for sporting events, and which in actuality allows the Camp Sweeney boys to extracurricularly leave their campus).

The architecture of the Gymnasium is without individual or independent distinction. It is a large, gable-roofed building housing ball courts in its high volume space and adjunct gym uses and spaces in a lower wing. It is of concrete wall construction with a steel and wood framed roof, a range of industrial steel windows, most with security grilles, and steel doors.

The architects of the Gymnasium, Kent & Hass – Andrew T. Hass, principal – did not play an important role in the architecture of the San Francisco Bay Area, and are not potentially identifiable as masters.

As Camp Sweeney and the Gymnasium building do not embody distinctive characteristics or methodologies, or represent the work of a master, or possess artistic value, then these built resources does not meet CR Criterion 3 (and NR Criterion C).

4. ***It has yielded, or has the potential to yield, information important to the prehistory or history of the local area, California, or the nation.***

   The Camp Sweeney and former Juvenile Hall property are not known to have yielded important historical or prehistorical information, nor do the subjects of this evaluation – a range of 20th-century-built resources – appear to have any potential to yield any important information in the future. Thus, neither Camp Sweeney nor the Gymnasium building meet CR Criterion 4.

In summary, since Camp Sweeney and the Gymnasium building do not meet any CR criterion of significance, then these resources are not eligible for the CR.

Signed:

Mark Hulbert
Preservation Architect

Attached: Figs.1-18 (pp.9-17); 1956 Senior Boys Camp sketch plans and elevations (5 pages); 2002 Juvenile Hall DPR forms.

Fig.1 – **Camp Sweeney Location Aerial** (2015 - north is up)

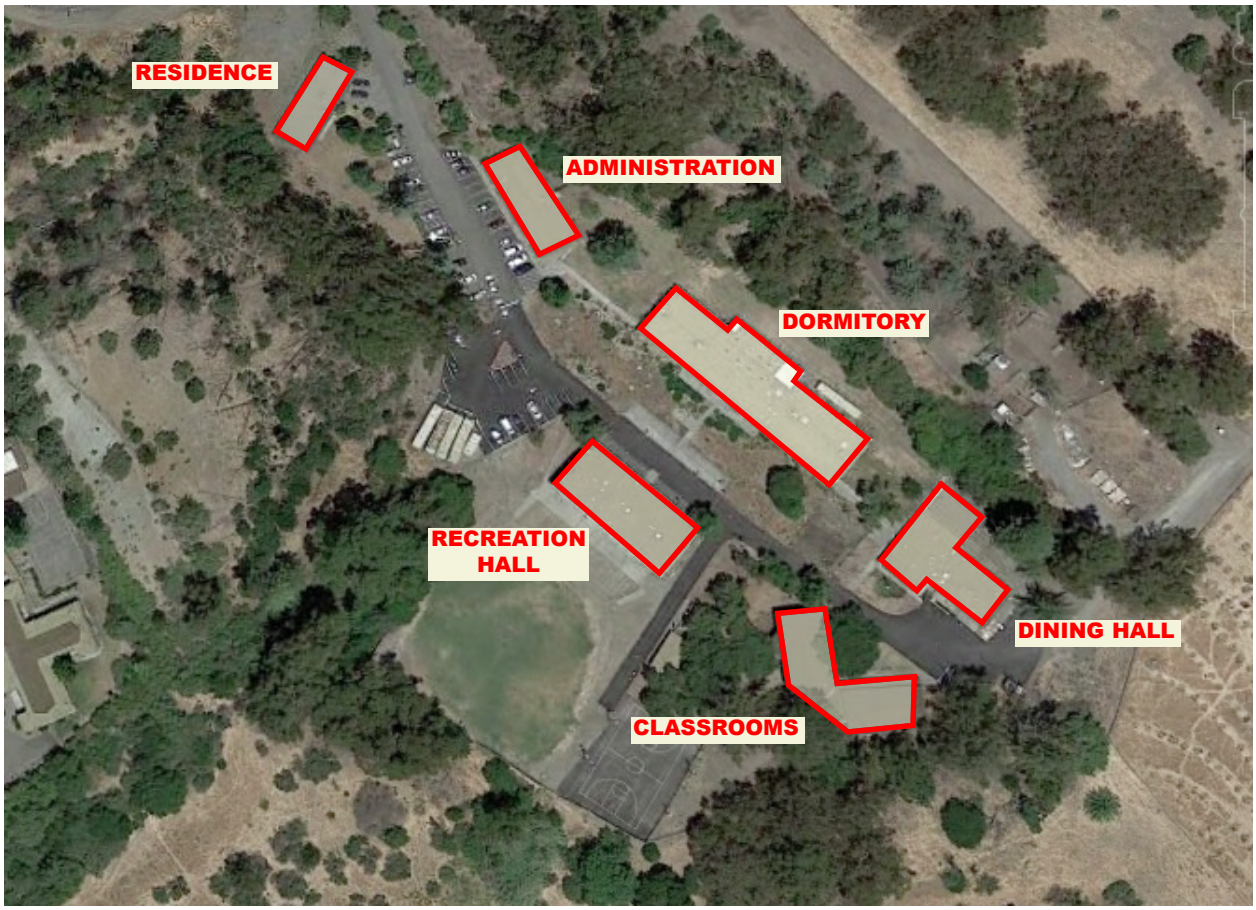

Fig.2 – **Camp Sweeney Aerial** (2015 - north is up)

Fig.3 – **Camp Sweeney - Campus roadway** (looking southeast)

Fig.4 – **Camp Sweeney - North side landscape** (looking northwest)

Fig.5 – **Camp Sweeney - Uphill landscape** (looking northeast)

Fig.6 –**Camp Sweeney - Ball field** (looking southwest)

Fig.7 – Camp Sweeney - Uphill landscape & former farm yard (looking north)

Fig.8 –Camp Sweeney - Altered entry road (looking east)

Fig.9 – **Camp Sweeney - Adjacent farm and landscape** (looking east)

Fig.10 –**Camp Sweeney - Administration Building**

Fig.11 – Camp Sweeney - Dormitory Building

Fig.12 –Camp Sweeney - Former Residence

Fig.13 – Camp Sweeney - Recreation Hall

Fig.14 –Camp Sweeney - Recreation Hall

Fig.15 – Camp Sweeney - Dining Hall

Fig.16 –Camp Sweeney - Dining Hall

Fig.17 – Camp Sweeney - Gymnasium

Fig.18 –Camp Sweeney - Gymnasium

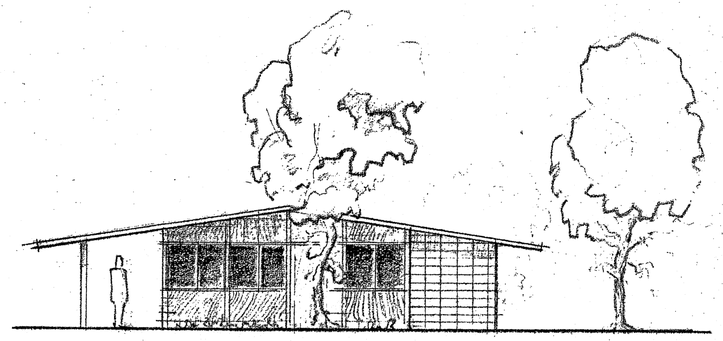

END ELEVATION

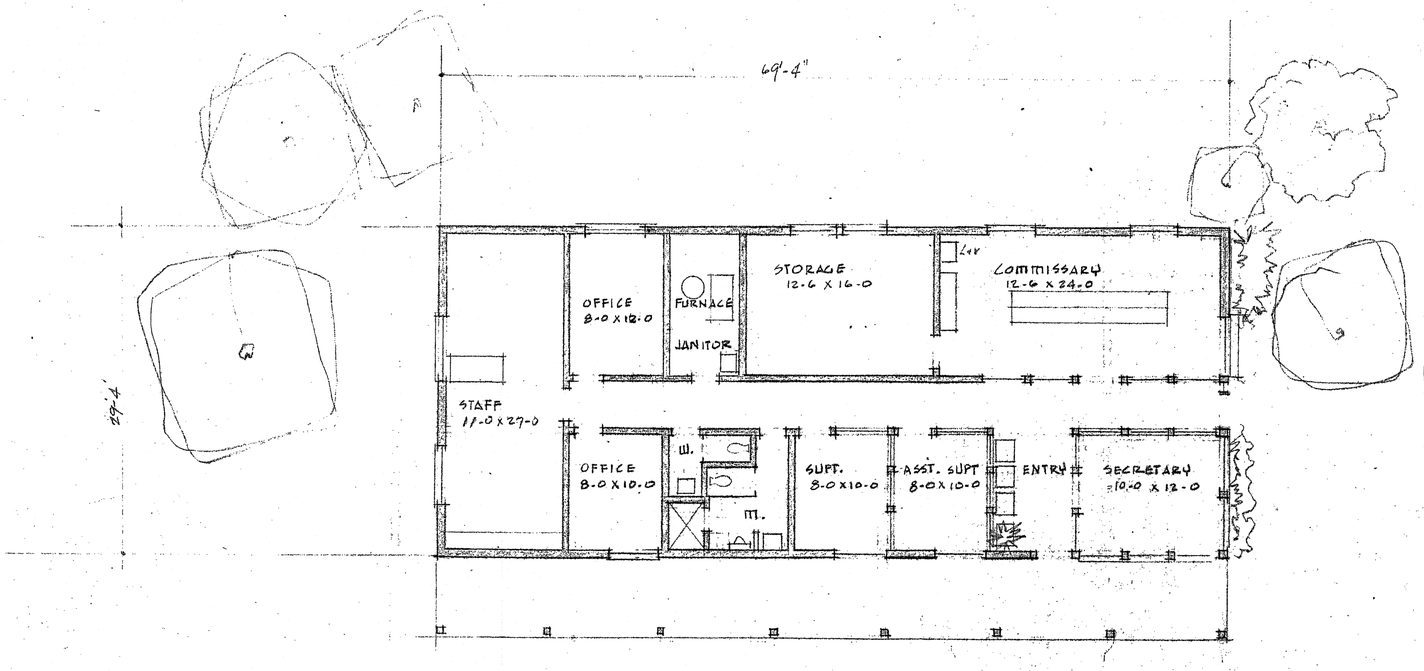

FLOOR PLAN

SCALE 1/8" = 1'-0"

ADMINISTRATION BUILDING
SENIOR BOYS CAMP
ALAMEDA COUNTY CALIFORNIA

CHESTER H. TREICHEL A.I.A. ARCHITECT

1975

DEC 18 1956

3

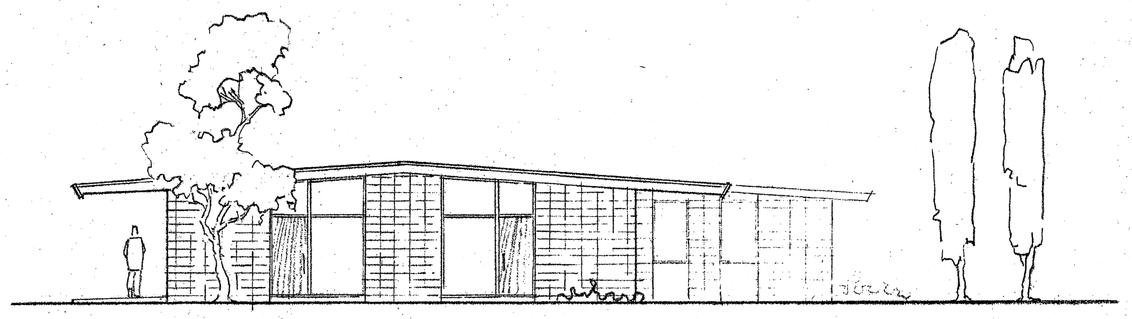

END ELEVATION

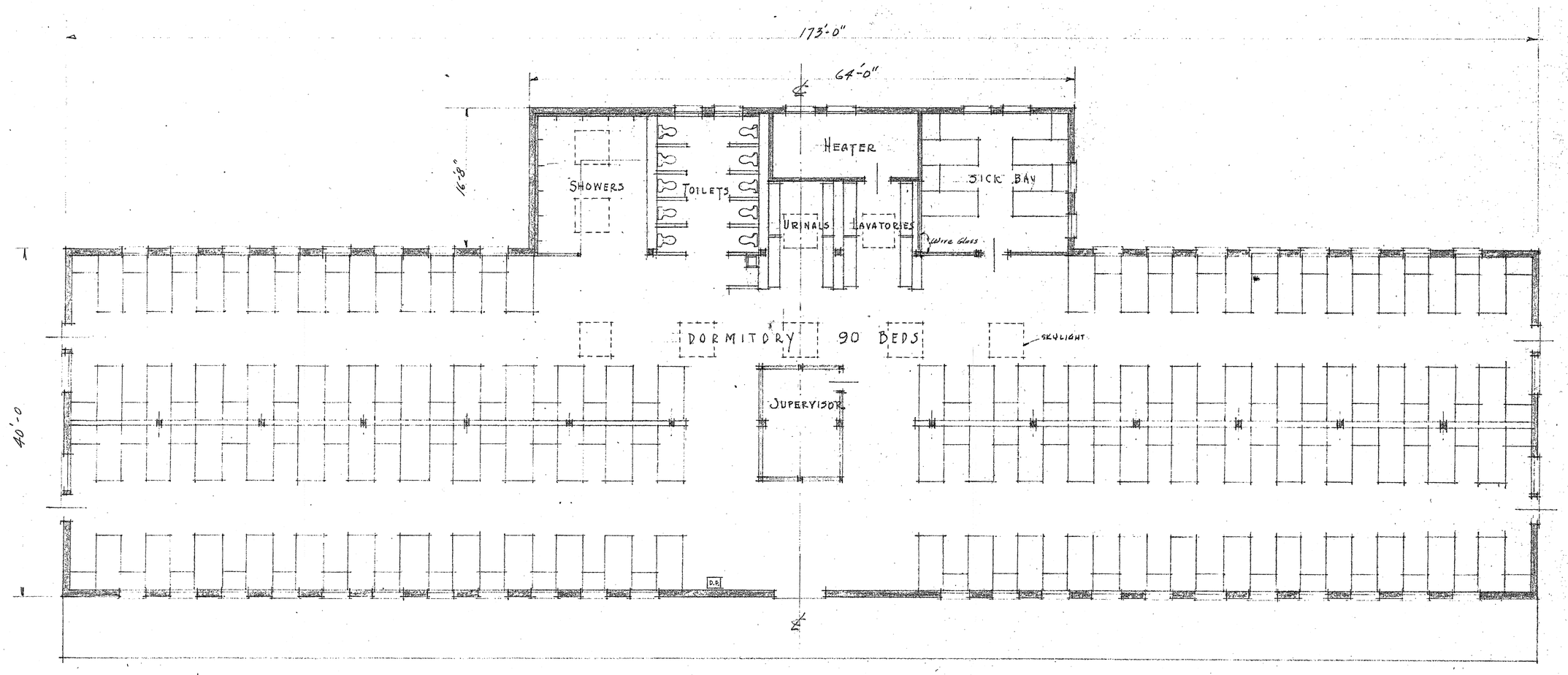

FLOOR PLAN
Scale 1/8" = 1'-0"

DORMITORY BUILDING
SENIOR BOYS CAMP
ALAMEDA COUNTY CALIFORNIA

CHESTER H. TREICHEL A.I.A. ARCHITECT

8000#

DEC 18 1956

4

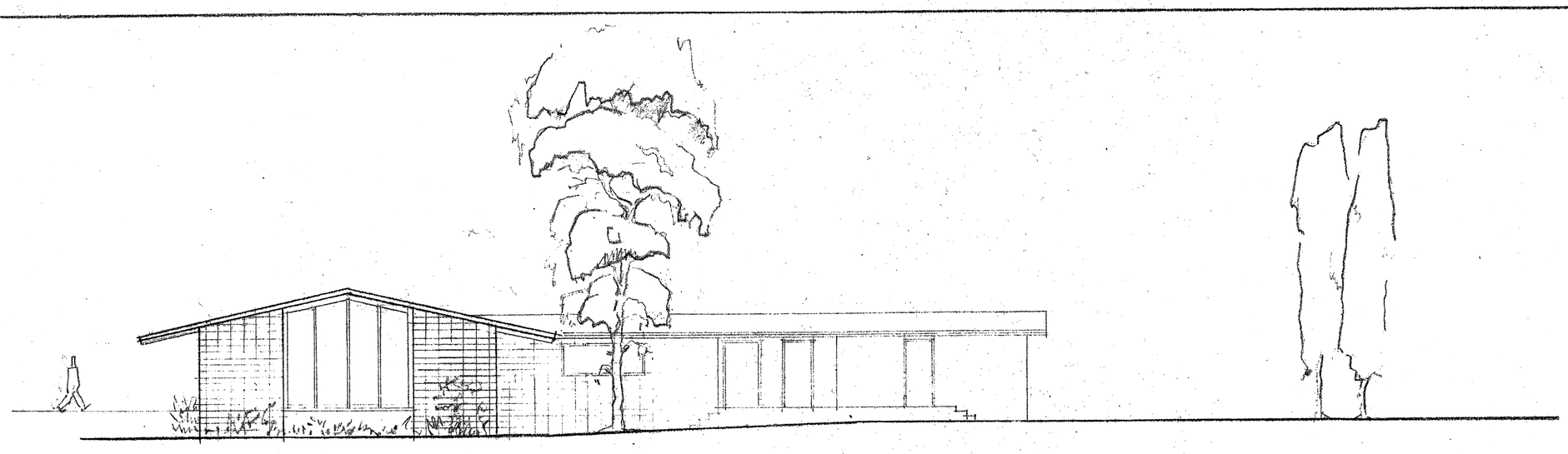

END ELEVATION

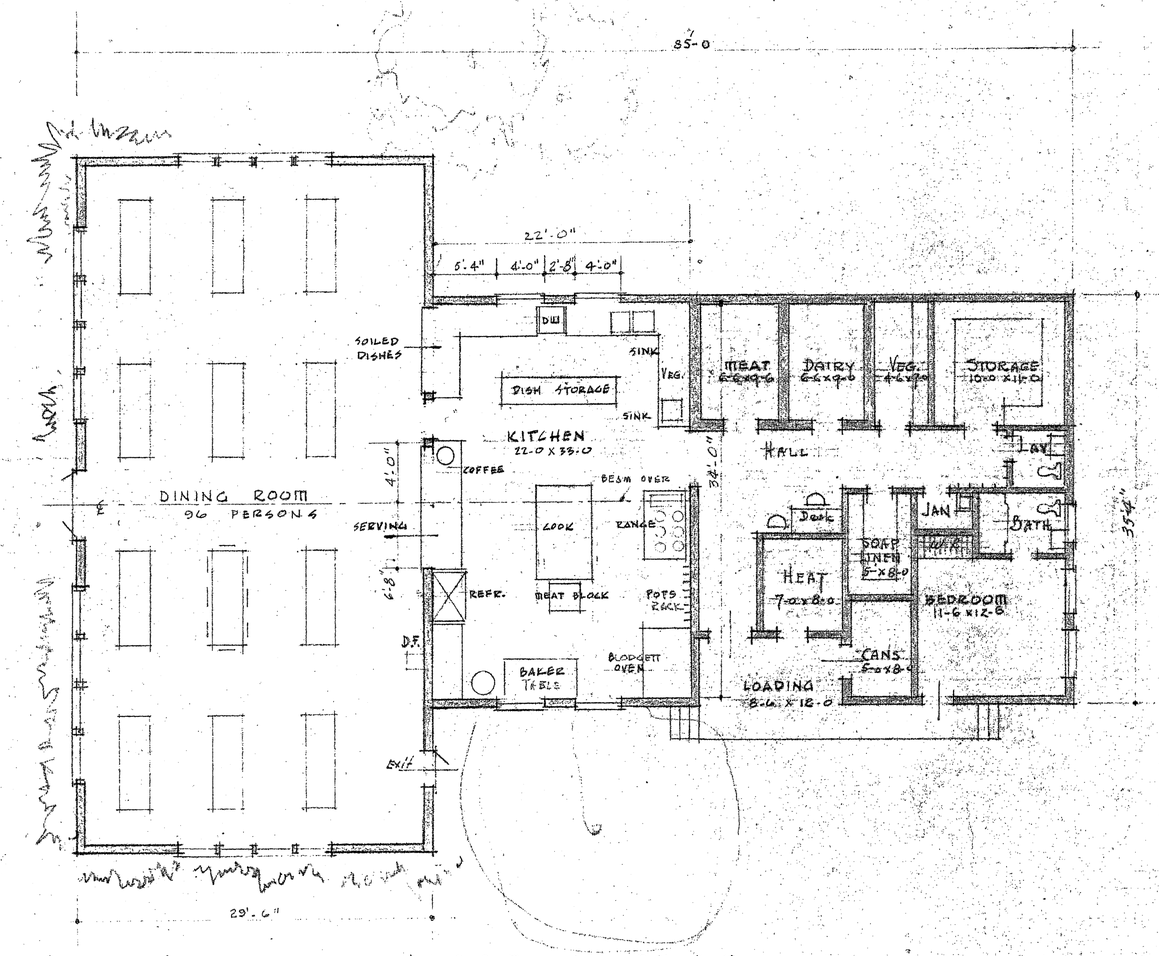

FLOOR PLAN

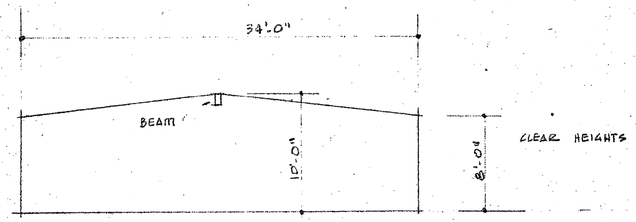

KITCHEN INTERIOR ELEVATION

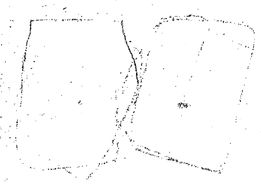

SCALE 1/8" = 1'-0"

DINING ROOM AND KITCHEN
SENIOR BOYS CAMP

ALAMEDA COUNTY CALIFORNIA

CHESTER H. TREICHEL A. I. A. ARCHITECT

3650 d'

DEC 18 1956

5

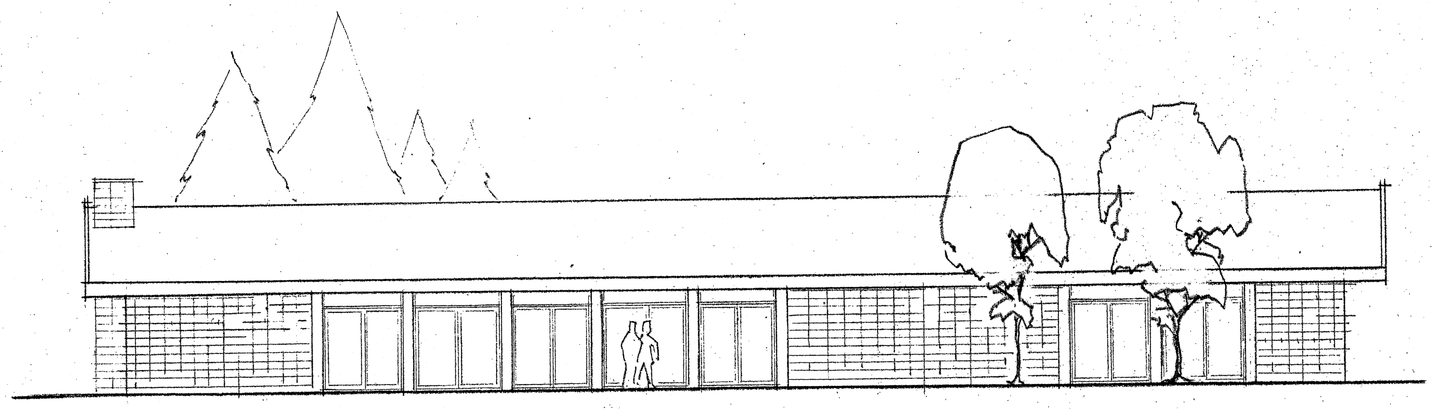

FRONT ELEVATION

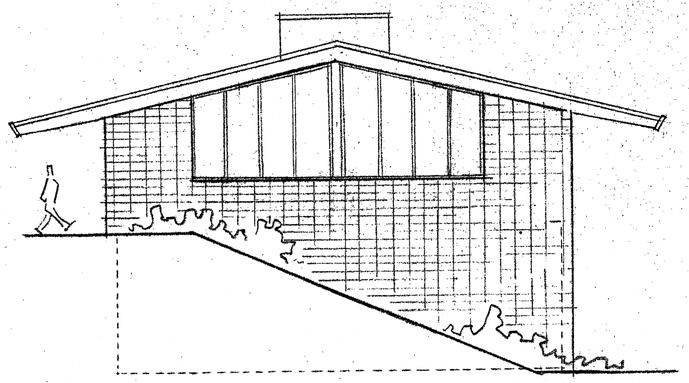

END ELEVATION

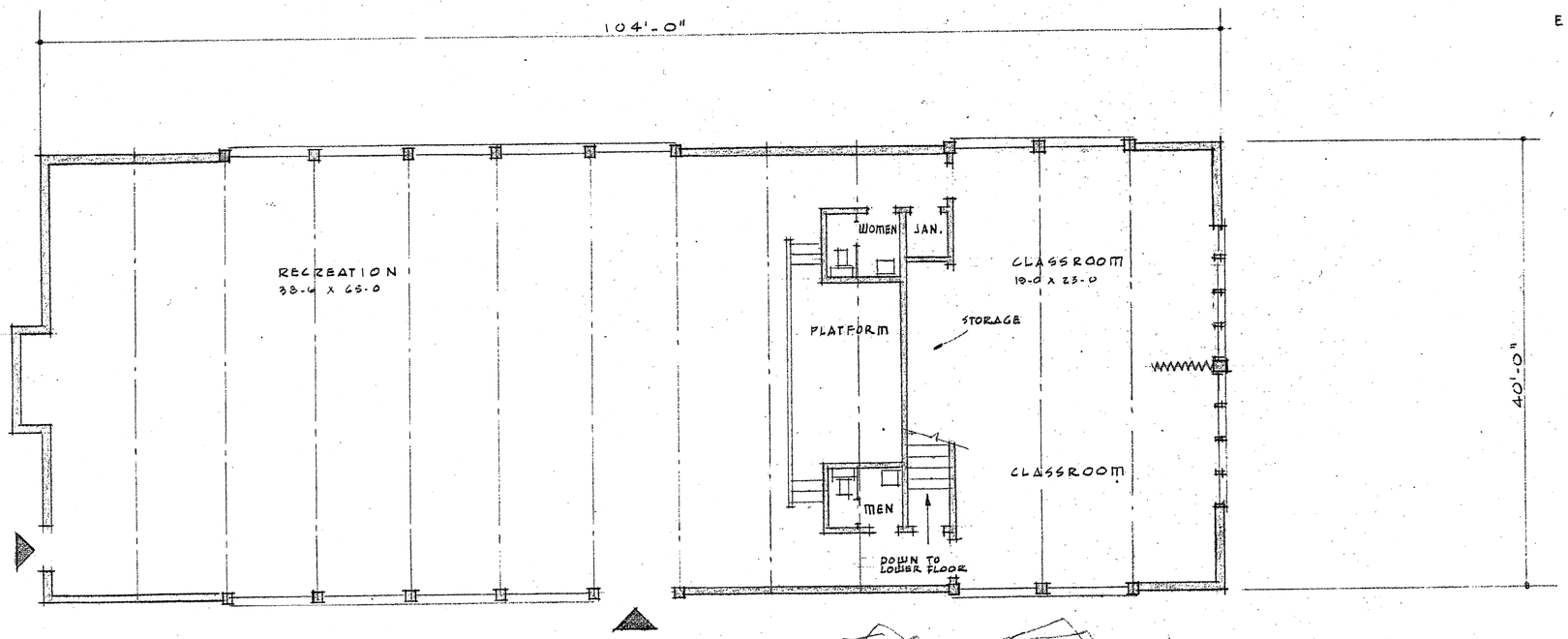

FLOOR PLAN

SCALE 1/8" = 1'-0"

RECREATION BUILDING
SENIOR BOYS CAMP
ALAMEDA COUNTY CALIFORNIA
CHESTER H. TREICHEL A.I.A. ARCHITECT

4160 # UP
4160 # DOWN

DEC 18 1956

6

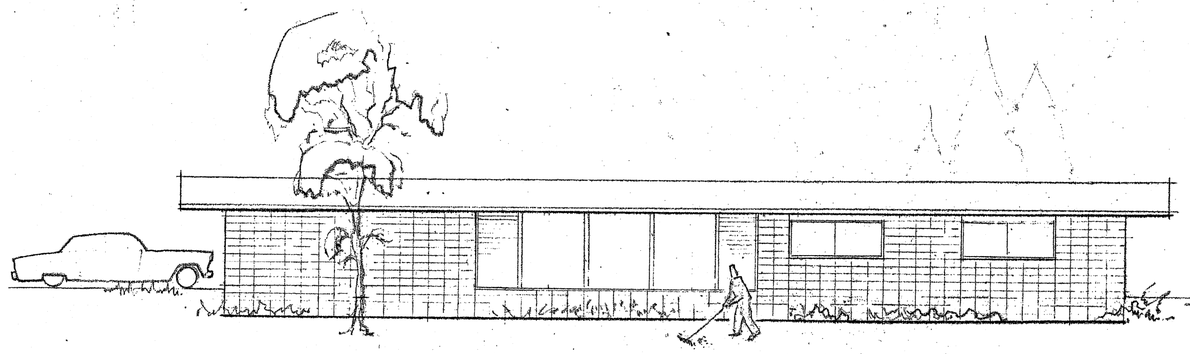

FRONT ELEVATION

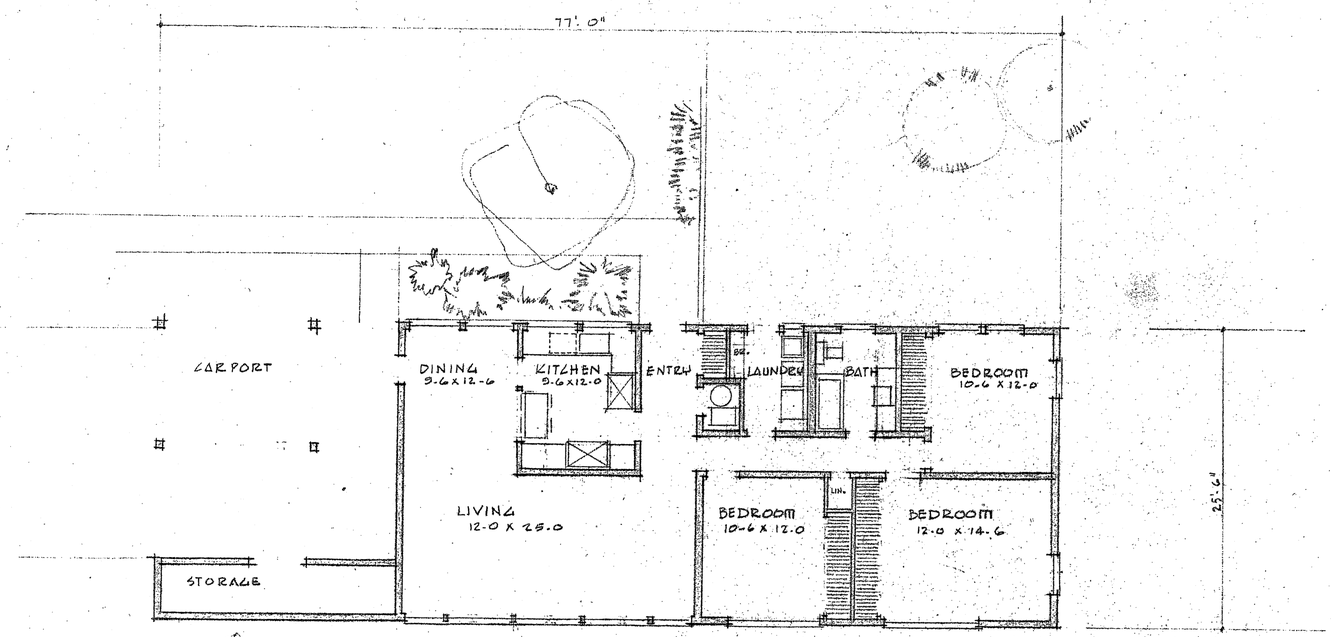

FLOOR PLAN

SCALE 1/8" = 1'-0"

SUPERINTENDENT'S RESIDENCE
SENIOR BOYS CAMP
ALAMEDA COUNTY CALIFORNIA

CHESTER H. TREICHEL ARCHITECT

1428 #
535 #

DEC 18 1956

State of California – The Resources Agency
DEPARTMENT OF PARKS AND RECREATION
PRIMARY RECORD

Primary # P-01-010525
HRI #
Trinomial
NRHP Status Code
Other Listings
Review Code ___ Reviewer ___ Date ___

Page 1 of 25 Resource Name or #: (assigned by recorder) Alameda County Juvenile Hall

P1. Other Identifier:
P2. Location: ☐ Not for Publication ☒ Unrestricted and (P2b and P2c or P2d. Attach a Location Map as necessary)
a. County Alameda
b. USGS 7.5' Quad Hayward (Map #4471) Date 1980 T 2S R 2W; - ¼ of - ¼ of Sec. unsectioned; Mount Diablo B.M.
c. Address 2200 Fairmont Drive (Juvenile Hall); 2300 Fairmont Drive (Chabot Community Day Center); 2600 Fairmont Drive (Camp Sweeney)
City San Leandro Zip
d. UTM: Zone 10 ; ___ mE / ___ mN
e. Other Locational Data: (e.g., parcel #, directions to resource, elevation, etc.) APN 080A-0153-008 and part of -010
(UTMs: Zone 10; 577650E/4174640N; 577600E/4173760N; 578180E/4174130N)

The Alameda County Juvenile Hall property includes several groups of related buildings on a large hillside site near Fairmont Hospital in San Leandro, California. The original Juvenile Hall (1953) is a high-security administrative and detention facility containing four interconnected buildings on a sloping site at the base of the hill, facing southwest to Fairmont Drive. Southeast of Juvenile Hall is Snedigar Cottage (1953), built as part of the original Juvenile Hall. A second building group, Las Vistas (1959–62) is nearby. Uphill from Juvenile Hall, to the east and north, are two other building groups, Camp Wilmont Sweeney (1958) and Chabot Ranch (1965). A detached receiving center and detention wing (1972) extends northwest from Juvenile Hall. Functionally, the original Juvenile Hall complex provides short-term detention for juvenile offenders awaiting trail or sentencing. The other compounds provided longer-term residential treatment for boys and girls in low-security settings. Las Vistas (girls) is now used for other purposes; Sweeney (senior boys) is still used for its original purpose; Chabot (junior boys) is currently vacant. The grounds are characterized by lush plantings of eucalyptus and pine trees. Parking lots extend across the front of the property below the Administration Building. There are views to the south and west over the urbanized flatland to the bay.

(see continuation sheet)

P3a. Description (Describe the resource and its major elements. Include design, materials, condition, alterations, size, setting & boundaries):

P3b. Resource Attributes: HP14--Government Building
P4. Resources present: ☒ Building ☐ Structure ☐ Object ☐ Site ☐ District ☐ Element of District ☐ Other

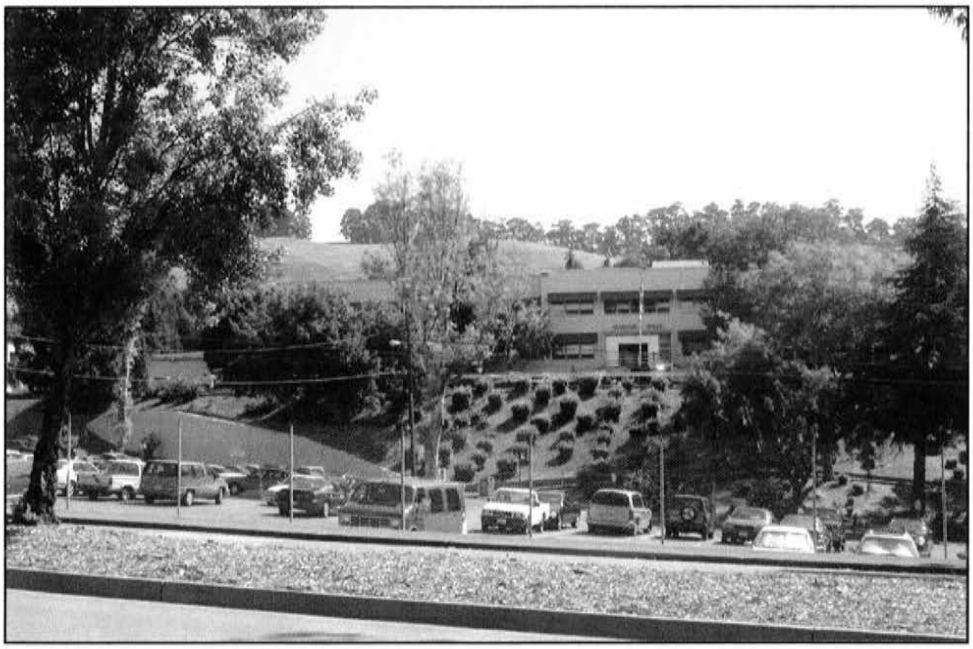

P5b. Description of Photo:
Photo 1: Alameda County Juvenile Hall Complex - Administration

P6. Date Constructed/Age and Sources:
☒ Historic ☐ Prehistoric ☐ Both

P7. Owner and Address
County of Alameda
1221 Oak Street, #536
Oakland, CA 94612-4224

P8. Recorded by:
(Name, affiliation, and address)

Woodruff Minor
Basin Research Associates, Inc.
1933 Davis St., Suite 210
San Leandro, CA 94577

P9. Date Recorded November 2002
P10. Survey Type: (Describe)
Intensive

P11. Report Citation (Cite survey report and other sources, or enter "none"):
Historical and Architectural Assessment – Alameda County Juvenile Hall by Woodruff Minor, M.A. and Basin Research Associates

Attachments: ☐ NONE ☒ Location Map ☒ Sketch Map ☒ Continuation Sheet ☒ Building, Structure and Object Record
☐ Archaeological Record ☐ District Record ☐ Linear Feature Record ☐ Milling Station Record ☐ Rock Art Record ☐ Artifact Record
☐ Photograph Record ☐ Other (List)

DEC - 9 2002

B1. Historic Name: Alameda County Juvenile Hall

B2. Common Name: Alameda County Juvenile Hall

B3. Original Use: Juvenile Detention Facility B4. Present Use: Juvenile Detention Facility

B5. Architectural Style: Institutional Modernism

B6. Construction History: (Construction date, alterations, and date of alterations)

The original Juvenile Hall (Administration, Boys' and Girls' Units, Gymnasium) and Snedigar Cottage opened in 1953. Camp Wilmont Sweeney was built in 1958. Las Vistas was constructed between 1959 and 1962. Chabot Ranch opened in 1965, replacing an earlier facility. The detached receiving center and detention wing were added in 1972. A second floor office addition at the rear of the administration building was also completed in 1972.

B7. Moved? ☒ No ☐ Yes ☐ Unknown Date: Original Location:

B8. Related Features:

B9a. Architect: Andrew T. Hass (Kent & Hass) – Original Juvenile Hall Complex; Chester H. Treichel – Camp Wilmont Sweeney and Las Vistas; Watanabe, Lipscomb, Fornoff and Alameda Co. Public Works Dept. – Chabot Ranch B9b. Builder: Engineers, Ltd.

B10. Significance: Theme Juvenile Justice **Area** Northern California

Period of Significance 1953 **Property Type** Detention Facility **Applicable Criteria** A/1 and C/3

(Discuss importance in terms of historical or architectural context as defined by theme, period and geographic scope. Also address integrity.)

HISTORICAL OVERVIEW

JUVENILE JUSTICE IN THE UNITED STATES

The roots of the juvenile justice system in the United States can be traced to sixteenth-century Reformation Europe. Religious and educational reforms in that era began to replace the idea of children as "miniature adults" with the view that children were persons whose moral and cognitive capacities were not yet fully developed. As a result, criminal justice would come to be applied differently to children and adults. Large-scale immigration and urbanization in nineteenth-century America accelerated what probably would have been a more gradual revamping of criminal law and its application to children. Congested cities resulted in more crime, including crimes committed by children. The creation of a separate juvenile court system in the early twentieth century reflected an increased societal concern for the particular problems of criminal justice for children, culminating in the adaptation of new standards of treatment and the widespread construction of detention facilities after World War II.

(see continuation sheet)

B11. Additional Resource Attributes: (List attributes and codes)

B12. References:

(see continuation sheet)

B13. Remarks:

B14. Evaluator Ward Hill, Woodruff Minor and Michael Corbett, Architectural Historians

Date of Evaluation: August 2002

(This space reserved for official comments)

See Continuation Sheet

P3a. continued

JUVENILE HALL

The four structures comprising the core of the original Juvenile Hall (1953) are the Administration Building, Boys' Unit, Girls' Unit, and Gymnasium. The Administration Building functions as the formal, public façade of the group. The Boys' Unit adjoins the Administration Building at the rear. The Girls' Unit and Gymnasium are set apart at the southerly end of the group. They are connected to each other and to the other two buildings by walled and roofed passageways. All of the buildings share common features such as reinforced-concrete construction, cement stucco veneer, metal-sash windows, and (with the exception of the gabled gymnasium) severely cubistic massing. The enclosed passageways are also constructed of reinforced concrete. The buildings of the group occupy different elevations on the hillside site, with the Administration Building at the lowest level, the Boys' and Girls' Units at an intermediate level, and the Gymnasium at the highest level. The hillside was graded in different ways to accommodate the buildings. A single-level terrace was created for both the Administration Building and Gymnasium, whereas the Boys' and Girls' Units occupy stepped terraces with varying floor levels. The enclosed passageways are both sloping and stepped.

The Administration Building is a two-story structure with a full basement. The hollow rectangular plan incorporates a central courtyard. The flat roof (with stairwell penthouse) is concealed by a continuous parapet. Horizontal bands of steel-sash windows extend across the front and sides of the building, and panels of translucent glass block demarcate stairwells at the sides. The rear half of the building and the courtyard tend to have smaller windows. The elevated, recessed entry at the center of the front façade is served by two sets of stairs with pipe railing. The entry is surmounted by a narrow canopy with a sign ("Juvenile Hall") in freestanding, upper-case metal letters. The interior consists primarily of corridors lined with offices. Significant spaces include the lobbies on the first and second floors, the adjoining corridors, the front and side stairwells, a small courtroom, and two dining rooms. The main lobby has a terrazzo floor and marble paneling. Marble wainscot continues in the front corridors and staircase and the upper-story courtroom lobby. Stairwells are detailed with aluminum railing and vertical panels of glass block. The upper-story courtroom retains wood veneer paneling. The ground-floor dining rooms (facing the courtyard) are lined with tall windows.

The Boys' Unit and Girls' Unit are the most prison-like of the buildings. The Boys' Unit is situated directly behind the Administration Building, to which it is connected by a short enclosed passageway. The flat-roofed structure has a generally rectangular plan, composed of four one-story cellblocks (A–D) grouped around a central multistory section containing the connecting corridor and upper-level classrooms. Bands and panels of windows incorporate narrow glass panes braced by heavy steel sash (called "psychiatric sash" in one newspaper account). Each cellblock contains 28 cells lining a central passageway (14 cells per side) as well as a large open bathroom and a common room. Each cellblock is adjoined by an outdoor play yard enclosed by a high wall. Built on a sloping site, the Boys' Unit is the most complex structure in the Juvenile Hall compound. Each facing pair of cellblocks occupies a different level on the hillside, and the upper levels of the building's central section step up at half-story intervals. The central corridor maintains a continuous slope through the building past each pair of cellblocks. At its upper end, the corridor connects with a transverse covered passageway that extends southeast across the grounds to the Gymnasium.

The Girls' Unit is isolated from the Boys' Unit and Administration Building, to which it is connected by a long covered passageway. At the entry to the Girls' Unit, the passageway takes a 90-degree turn and continues in a northeasterly direction to the Gymnasium. The Girls' Unit is an L-plan, flat-roofed structure. As in the Boys' Unit, the windows incorporate narrow glass panels braced by heavy steel sash. The building is composed of two cellblock wings converging on a central section containing a common room, classrooms, and a large open bathroom. The up-slope wing and central section are one story in height; the down-slope wing has two stories. The building contains a total of 38 cells. An outdoor play yard enclosed by a high wall is set into the angle of the wings.

The Gymnasium is sited uphill from the other Juvenile Hall buildings, at the southeast rear corner of the group. As mentioned, it is connected to the Boys' and Girls' Units by walled and roofed passageways. The building has a rectangular plan and a wooden moment frame with a pitched roof. Large windows with metal sash are set into all four sides of the building. The interior is a large open space with maple floor and retractable wood bleachers. Behind the Gymnasium is a ballfield set in a natural amphitheater (a former quarry) with steep slopes and perimeter fencing.

The Juvenile Hall complex described above retains a relatively high degree of integrity. The Boys' Unit, Girls' Unit, and Gymnasium, as well as the enclosed corridors connecting them, appear to be largely intact. Due to major additions completed in 1972, the Administration Building is the most altered of the four structures. One alteration involved the addition of a second story to the rear wing (as built in 1953, the rear wing was one story in height; the upper-story addition closely matches the original building). The other additions consisted of a new receiving center and a new detention wing. A passageway enclosed with steel mesh extends a short distance from the northerly side of the Administration Building to the receiving unit. An enclosed passageway continues in a northerly direction from the receiving unit and crosses a road to the new detention complex, composed of four buildings, including two cellblocks and a classroom building. Other additions over the years include a loading dock, storage shed, and steel-mesh security pens on the south side; a wheelchair lift by the front stairs; and aluminum awnings on the front windows. The principal interior spaces are essentially unaltered.

Snedigar Cottage (1953), the fifth building in the original Juvenile Hall complex, served an entirely different probationary purpose: the short-term care of abandoned, abused, and neglected children. As a result, this building was sited downhill and apart from the detention compound. Designed to resemble a house, the one-story, wood-frame, hip-roofed structure has an irregular plan, with one forward-facing wing and one receding wing at each end of a central section. Windows have metal sash. The building has been extensively altered to serve its new use as the headquarters of the maintenance division. Large garage doors have been cut into the building's north side, windows and doorways have been reconfigured, and the interior plan and finish have been changed.

OTHER BUILDINGS

Camp Wilmont Sweeney (1958) is located uphill from the old Juvenile Hall complex. This low-security compound originally provided on-the-job vocational training for older boys. It contains seven buildings grouped around a central drive, with panoramic views to the south and west. The original buildings – administration, dormitory, recreation, dining, and director's residence – are one-story Ranch Style structures of ochre concrete block with low-pitched gable roofs and plate-glass windows. A gabled wood-frame classroom building was added in 1975. The older buildings appear to be unaltered except for a rear addition to the dining hall.

P3a. continued

Las Vistas (1959–62) began as a low-security facility for girls to learn social skills. Now used for other purposes, the group of four Ranch Style buildings occupies a landscaped setting south of Juvenile Hall, uphill and south of Snedigar Cottage. All of the buildings are low, one-story, wood-frame structures with stucco-clad walls. The hipped and gabled roofs have wide overhangs. Three of the buildings (Units 1–3, originally living quarters) are identical, with cruciform plans and bands of windows. The fourth structure (originally for education and recreation) is smaller than the other buildings, with a truncated cruciform plan. The buildings are connected by roofed walkways.

Chabot Ranch (1965), situated uphill from Juvenile Hall, is a complex of five buildings in a landscaped setting screened by trees. The buildings – administration, education, dining, dormitory, and director's residence – have walls of ochre concrete block and faux-mansard roofs. An athletic field adjoins the complex, and a swimming pool and greenhouse were added nearby in the 1970s.

Juvenile Hall Additions (1972). The receiving center and detention wing are wood-frame, stucco-clad structures with varying roof shapes. The second-story addition to the Administration Building matches the materials and fenestration of the original structure.

B10. Continued

The first laws in the United States to embody the changing attitude toward the punishment of children were enacted in New York in 1796, probably under the influence of social-justice reformers led by Quakers. These early laws replaced harsh penalties such as whipping and death with incarceration. By 1823, the Society for the Prevention of Pauperism in New York had established "Houses of Refuge" for street children as an alternative to confinement with hardened criminals. An 1839 ruling in a juvenile case in Pennsylvania put forth the doctrine of *parens patriae*, establishing the right of the state to intervene in the life of a child in a manner that differed from adult intervention. The state, as surrogate parent, was empowered to provide for persons who were not of full legal capacity; civil government could decide what was best for a child. By 1870, Massachusetts had pioneered the practice of trying children apart from adults.

The Juvenile Court Act, enacted in Illinois in 1899, instituted the concept of juvenile courts as civil courts devoted to the rehabilitation of wayward children rather than purely punitive criminal courts. The Illinois law became the national model: by 1910 at least 30 states had adopted similar statutes, and by the 1920s virtually every state had juvenile court systems. Uniform standards of treatment proposed by the National Probation Association in 1923 emphasized that detention was a last resort; if necessary, it should be as brief as possible; and it should never involve the use of jails or prisons. The Model Youth Correction Authority Act, devised by the American Law Institute in 1940, provided a prototype for new standards adopted in many states. The 1940s marked the beginning of a national preoccupation with the diagnosis and treatment of juvenile delinquency – an emerging crisis related to the dislocations of depression and war.

Since the 1960s, the juvenile justice system has undergone substantive change in tandem with the shifting patterns of the cultural and political landscape. During the socially conscious 1960s, there was a renewed emphasis on reform and rehabilitation. The prevailing mindset of "deinstitutionalization" favored such options as group homes, day treatment centers, and wilderness programs. At the same time, the rights of juvenile offenders were strengthened by court decisions giving adolescents and children the same constitutional protections available to adults, including free speech and due process. Since the late 1970s, however, the national trend has been characterized by a toughening of the response to juvenile crime, with juvenile courts focusing on the offense rather than the treatment of the offender, according to Harris, Welsh, and Butler's *A Century of Juvenile Justice*. Between 1983 and 1995, the number of juveniles held in public facilities increased by 47 percent. The juvenile justice system in the United States will continue to evolve in response to the culture at large, with treatment ranging between the extremes of incarceration and social reform.

JUVENILE JUSTICE IN CALIFORNIA AND ALAMEDA COUNTY

Over the past century and a half, California has reflected national trends in its handling of juvenile offenders. In the nineteenth century, juveniles who committed crimes were often sentenced to terms in adult prisons. Following the establishment of the California Prison Commission in 1865, a few special facilities were provided for wayward children, such as the Preston School of Industry and the Reform School for Juvenile Offenders, later rebuilt and renamed the Whittier State School.

Like most states, California soon adopted the Illinois model of juvenile courts. The California Juvenile Court Law was passed in 1903. Under the new law the counties were apparently required to build juvenile detention facilities, which were overseen by the State Board of Charities and Corrections, a new body that investigated and reported on the "charitable, correctional and penal institutions of the State." The Biennial Reports of this board contained profiles of every institution under its purview, including a census of inmates. In 1925, the State Board of Charities and Corrections was replaced by the State Department of Public Welfare, which was succeeded two years later by the State Department of Social Welfare. The Division of County Relations, an agency within the latter department, oversaw the state's dealings with county-run institutions such as hospitals, homes for the aged, detention homes, and jails.

The 1940s represented the coming of age of juvenile justice in California, as in the rest of the country. Inspired by the Model Youth Correction Authority Act of 1940, the state legislature created a new department to deal with these issues. Established in 1941, the State Department of the Youth Authority – commonly known as the California Youth Authority (CYA) – studied delinquency and proposed standards for diagnosis and treatment. The agency's principal objectives were rehabilitation and prevention. The CYA was also given responsibility for the state correctional schools, and it advised the counties on methods of detention. Its recommendations for standardized nomenclature at the county level included the phrase "juvenile hall" to replace earlier names such as "detention home." In 1955, the CYA published the *Handbook for the Operation of Juvenile Halls*, followed in 1956 by a survey called *Juvenile Halls of California*. Following the World War II hiatus in civilian construction, most counties in California built new juvenile halls.

B10. Continued

ALAMEDA COUNTY JUVENILE HALL

As one of the most populous counties in the state, Alameda County faced significant issues of juvenile crime and punishment at a relatively early date. The Alameda County Juvenile Court and Detention Home, opened in 1916 at Eighteenth and Poplar Streets in West Oakland, was designed to handle 800 children per year. In its first year of operation, the facility processed an average of 56 children per month (totaling 672 for the year). It soon proved to be inadequate. In 1930, a grand jury termed the conditions there "intolerable."

A series of articles published in local newspapers in the 1940s underscored the need for a modern facility. "Detention Home Crowds Innocent with Criminal," read one headline from 1944. Another headline, from 1946 – "Probe Bares Squalor at Detention Home; Youths Jailed in 'Flop House'" – was accompanied by photographs of young offenders sleeping on corridor floors. The article noted: "Although the building normally can accommodate only 100 young prisoners – 74 boys and 24 girls – a maximum of 127 have been housed in the building in recent days. The 'extra' 27 were forced to lay mattresses on the floor and call such 'flop house' arrangements their beds." According the chief staff counselor, "The whole darn place is crowded way beyond health standards."

New facilities had been proposed as early as 1928, when the Alameda County Juvenile Probation Committee and Probation Officer O. F. "Ollie" Snedigar requested funding for "an adjustment school where delinquent boys might be restored to normal character." The $250,000 facility was to have held up to 100 boys. The Board of Supervisors turned down the request in 1928, and again in 1929. Supervisor Redmond C. Staats considered "the care and treatment of juvenile delinquents to be a State problem. . . . If there is no place for these boys and the reformatories are overcrowded, let the State make provision for them, as it should." In 1937, a federation of 32 women's clubs in the East Bay petitioned the supervisors for a new detention home.

Planning for the new Alameda County Juvenile Hall began during World War II. The Board of Supervisors considered a wide variety of locations for the new facility, including sites in Oakland, San Leandro, Hayward, and Castro Valley. In June 1946, after a two-year search, the supervisors submitted a list of seven potential sites to the county's Superior Court judges (who were to make the final selection). In each case, neighborhood opposition forced to county government to seek elsewhere.

In February 1947, the supervisors and judges finally chose a hillside site on county-owned property at Foothill Boulevard and 150th Street in San Leandro, adjoining Fairmont Hospital. The property had been owned by the county since 1869, when 124 acres of level and sloping land at the base of the hills had been acquired for the Alameda County Infirmary. Additional land was acquired over the years until the site totaled 400 acres. The first hospital building opened in 1869; in 1926, the name of the facility was changed to Fairmont Hospital. Most of the hospital property functioned as a farm or ranch that raised cattle, chickens, and hogs for supplying milk, eggs, pork, and bacon to the various county hospitals. Barns and sheds were grouped to the west of the infirmary complex, with most of the land given over to grazing. Because of this activity, the property was often referred to as the Fairmont Farm or County Farm.

In order to alleviate overcrowding at the existing detention home, a temporary facility for minimum-security offenders was established on the county-owned property in 1947. The new facility, named Camp Chabot, consisted of a group of wooden buildings (formerly used as an adult prison farm) situated uphill from the present-day juvenile hall site. Camp Chabot utilized a program of classroom education as a means of rehabilitation. (Rebuilt in the 1960s, the facility is now known as Chabot Ranch or Camp Ready). Initial planning for the new juvenile hall included the idea of retaining the County Farm as a setting for vocational training and rehabilitation. As it turned out, the farm remained in operation at the periphery of the juvenile hall complex until the latter half of the 1950s, when the buildings were razed.

In August 1949, the San Francisco architectural firm of Kent & Hass was awarded the design contract (which provided a 7 percent commission). The principal designer was Andrew T. Hass, a resident of the city of Alameda. The supervisors approved the plans late the following year. On February 8, 1951, the Alameda County Board of Supervisors accepted the lowest of three bids ($2,107,000) and awarded the construction contract to Engineers, Ltd., of Oakland. Completed two years later (six months behind schedule), Juvenile Hall was formally dedicated on March 15, 1953, with 4,500 persons on hand for tours of the facility. The lobby plaque stated: "Dedicated to the Building of Character in the Youth of America." The principal speaker at the event, Heman Stark, director of the California Youth Authority, praised the Alameda County Probation Department and staff as "the finest in the state." The final construction cost for the project came to about $2,207,000, though with furnishings and equipment the total exceeded $2,550,000. The project was financed by county funds and a $750,000 state grant.

The original Juvenile Hall complex consisted of five buildings. The four principal structures – Administration Building, Boys' Unit, Girls' Unit, and Gymnasium – formed the core of the facility. These core buildings had a primarily prison-like feeling reflecting their overall function as a short-term, high-security processing and detention center for juvenile offenders going through the court process. The inherently severe design, the use of concrete as a building material, the pastel-green color scheme (since repainted white), and such security measures as high walls, wire mesh fences, and walled and roofed passageways contributed to the institutional feeling of the place. The Administration Building, with adjoining parking lot, housed administrative offices, a juvenile courtroom, receiving areas for male and female inmates, and dining rooms. The separate Boys' and Girls' Units to the rear of the Administration Building contained holding cells, common rooms, classrooms, and walled play yards. The Gymnasium at the rear of the complex was adjoined by a ballfield set in a former quarry with steep slopes and perimeter fencing. The fifth building, Snedigar Cottage – named for O. F. Snedigar, the county's probation officer from about 1910 until his retirement in 1952 – served an entirely different purpose and therefore was set apart from the main complex. Its residential, homelike design and lack of security features reflected its function as a short-term care facility for abandoned, abused, and neglected children.

The Alameda County Juvenile Hall was designed to accommodate 150 youths (112 boys and 38 girls) in addition to the 28 dependent children in Snedigar Cottage. The administrative staff totaled 55 persons, including 40 persons who directly supervised the children. There were also six teachers who conducted classes for the children. Within several years of its opening, the facility was seriously overcrowded. The architect's plans allowed for a substantial expansion of the detention center, and planning for two major additions to the campus began in 1957.

B10. Continued

Camp Wilmont Sweeney – originally known as the Senior Boys Home and later as Camp Los Cerros – opened in September 1958 on an uphill site behind the original Juvenile Hall. This residential treatment program for older boys supplemented Chabot's classroom emphasis with on-the-job training (e.g., working on local highways, rebuilding picnic tables in the regional parks, and landscaping the Juvenile Hall complex). The original complex of one-story, concrete-block structures includes buildings for administration, sleeping, dining, recreation, and a director's residence. Originally there was a print shop, wood shop, and small-motor shop. A change in state law (requiring formal education for juvenile offenders under the age of 18) resulted in the addition of a classroom building in 1975 (and the discontinuance of the work-oriented program). Completed at a cost of $325,000, the original complex was designed by Oakland architect Chester H. Treichel as a loosely organized ensemble of Ranch Style buildings around a central drive. The low-security, 80-bed facility has no walls or fences.

Las Vistas – originally the Las Vistas Home for Girls or the Juvenile Home for Girls – was completed in phases between 1959 and 1962. It was intended as a sort of "charm school" for 16-to-18-year-old delinquent girls. The idea, according to the *Oakland Tribune*, was "to polish the roughness off the teenage rebel and teach her how to snag a husband." There were to be two 12-bed units where girls would learn about grooming, dress, and personal hygiene. As built, the complex consisted of three identical 24-bed dormitories and a smaller classroom/recreation building. The first unit, Helen MacGregor Hall, built at a cost of $170,444, was dedicated in September 1959. The second unit, Cecil Mosbacher Hall, which cost $200,000, opened in April 1961. The third unit was completed early in 1962 for $235,000. Chester H. Treichel designed the group as a pleasant ensemble of one-story Ranch Style buildings connected by covered walkways, in a landscaped setting near the main Juvenile Hall complex. Changes in juvenile law in the 1960s resulted in the complex being converted into a residential treatment program for low-risk delinquents. Since the 1970s, the Alameda County Social Services Department has utilized Las Vistas for child protective services. Unit No. 3 currently functions as the Chabot Community Day Center, a combination school and "life skills" facility for wards of the court.

Chabot Ranch, originally Camp Chabot, began in 1947 as a temporary facility in several old wood-frame buildings, formerly the county's adult prison farm. It was the first juvenile facility on the site, predating the present-day Juvenile Hall by six years. Its original purpose was the rehabilitation of juvenile offenders through classroom education. This early facility was razed in the 1960s and replaced with an ensemble of concrete-block structures designed by the firm of Watanabe, Lipscomb, Fornoff in association with the Alameda County Public Works Department. Also known as Camp Ready, the 90-bed complex is intended for younger boys. It opened in 1965 and is presently unoccupied.

A major expansion of the main Juvenile Hall was completed in 1972, at the same time as the construction of Fairmont Drive. The new facilities included a second story office addition at the rear of the Administration Building and the construction of an entirely new detention wing to the west, containing a receiving center, four detention units, and a classroom building. An enclosed wire-mesh passageway connects the new wing and receiving center to the Administration Building.

When Juvenile Hall opened, the old detention home in Oakland became a receiving center for juvenile offenders bound for the new facility. This reception center closed in 1964, and the old detention home was demolished soon after. A new receiving unit was created at the Alameda County Probation Center at 400 Broadway, Oakland. This unit was superseded by the receiving center in the 1972 addition at Juvenile Hall.

ARCHITECTURAL OVERVIEW OF JUVENILE HALLS IN CALIFORNIA

Early juvenile facilities built by the State of California provided non-threatening, homelike settings for children. Both the Ventura School for Girls (1919) and the Whittier State School for Boys (ca. 1919–1923) contained groupings of attractive residential buildings in landscaped settings.

County facilities built in California in the early 20th century varied in size according to their settings. Densely populated counties had larger detention homes than rural counties. Due to high property values and relatively constricted sites, highly urbanized county seats such as San Francisco (San Francisco County), Oakland (Alameda County), and San Jose (Santa Clara County) tended to erect monumental multi-story buildings. San Francisco's first Juvenile Court and Detention Home (1914), now used for other purposes, was designed by the prominent architect Louis Christian Mullgardt. According to Corbett, the building "is a 10-story high-rise structure with a strikingly modern façade treatment and decoration influenced by the Arts and Crafts movement." The first Alameda County Juvenile Court and Detention Home (1916) was the work of another prominent San Francisco architect, Henry H. Meyers, who also served as the official Alameda County architect at the time. As described by Corbett, the building "was an imposing two-story structure in a symmetrical composition . . . like a high school with projecting pavilions at the center and ends of a long rectangular block punctuated by rows of regular windows. Rich decorative detail . . . appears to have been derived from a mix of Renaissance and Arts and Crafts sources." The San Jose facility (1930), designed by that city's leading firm, Binder & Curtis, was a large two-story structure with Spanish Colonial Revival styling: stucco-clad walls, red tile roofs, and a balcony arcade.

Juvenile Halls of California, the survey published by the California Youth Authority in 1956, is a helpful compendium of information. Each entry includes a photograph, year(s) of construction, architect, and class of construction (there are no floor plans or detailed descriptions). The survey listed 34 country-run juvenile halls in California. Of these, 21 were entirely new facilities opened since 1945, and another four were older facilities that had been substantially altered and enlarged during this same period. These 25 newer facilities represented nearly three-fourths of all county juvenile halls in California in 1956. Nearly all of these postwar facilities were modernist buildings with a spare, rational, functional feeling. In larger facilities, these stylistic tendencies were often prison-like in effect. It is not known why early postwar juvenile halls in California were apparently designed to be short-term prisons rather than "homelike" rehabilitative environments, as recommended by the juvenile-justice literature of the period.

The ten largest juvenile halls in California in 1956 (in order of size) were those in Los Angeles, San Francisco, Alameda, San Diego, Contra Costa, Riverside, Kern, Fresno, San Joaquin, and Sonoma Counties. Built between 1949 and 1956, they varied in cost from $327,000 to $4.5 million, with holding capacities ranging from 55 to 585 children.

B10. Continued

The Alameda County Juvenile Hall (1953/$2.2 million/178 children) was typical for the period in terms of its modernist design and prison-like feeling. What set this facility apart from most others in the state was its cost and size. It was only one of four juvenile halls in California in 1956 that had cost more than a million dollars to build (only San Francisco and Los Angeles cost more) and that could hold more than 100 children (again, only San Francisco and Los Angeles were larger).

ARCHITECTS HASS AND TREICHEL

The son of a cabinetmaker, Andrew T. Hass (1896–1979) practiced architecture in the Bay Area between the 1920s and the 1950s. He resided in Alameda from 1920 to 1955, later moving to Los Gatos. Hass opened an office in San Francisco in 1924 with partner Thomas Kent (who was related to him by marriage), operating under the name Kent & Hass for much of his career. Working alone and with Kent, Hass is known to have designed structures in San Francisco, Oakland, Alameda, the Sacramento Valley, and Lake Tahoe. His work in San Francisco included office remodels for stockbrokers such as Dean Whitter & Co. The Oakland Cultural Heritage Survey characterizes his work in that city as "mostly large Period Revival houses." He also served as one of the consulting architects for the Oakland – San Francisco Bay Bridge.

Hass designed numerous buildings in Alameda, including houses, office buildings, and schools. His houses from the 1920s and 1930s display a variety of Period Revival styles, such as Spanish Colonial Revival, Norman Revival, and Colonial Revival. His two major office buildings in Alameda – the three-story Times-Star Building (1947) and the one-story East Bay Municipal Utility District Building (1949) – are both reinforced-concrete structures with a functional feeling and vestiges of Moderne detailing. His principal commissions in Alameda were done for various departments of the city government. These include a monumental Moderne style electric substation (1936) and seven schools erected between the late 1930s and the late 1950s. Six of the schools are still used as schools; one has been converted into a senior center. For the most part they are low, stucco-clad structures with generous amounts of windows, unpretentious buildings that fit quietly into their neighborhood settings. Stylistically, they range from a lightly ornamented prewar Moderne to a more functional postwar modernism. Hass also collaborated on the design of the city's first public housing project, Woodstock (1941). Alameda County Juvenile Hall was probably his single largest commission.

Little is known about the career of Chester H. Treichel (ca. 1896–1981). He apparently practiced in Oakland from the 1920s to the 1960s. According to the Oakland Cultural Heritage Survey, he "appears best known for Spanish and Monterey style houses and apartment buildings." The regional trade journal *Architect and Engineer* ran the following notice in its September 1929 issue: "Chester H. Treichel, formerly associated with Weeks and Day of San Francisco, announces the opening of an office for the general practice of architecture [in the] American Bank Building, Oakland." The article also noted that Treichel had completed plans for an apartment building in Oakland. An illustration of this building (Atascadero Apartments) in the *1931 Oakland Tribune Year Book* shows a picturesque, four-story, Spanish style structure with balconies and a tower.

EVALUATION

The 1953 Alameda County Juvenile Hall complex (excluding Snedigar Cottage) appears to be eligible for the California Register of Historic Resources (CRHR) under Criterion 1 (history) and Criterion 3 (architecture). It will become eligible for the National Register of Historic Places (NRHP) under Criterion A (history) and Criterion C (architecture) when it becomes 50 years old in 2003. The 1972 additions, which are for the most part detached and somewhat removed from the original complex, have not seriously compromised the integrity of the original Juvenile Hall. The upper-story rear addition to the Administration Building matches the original and is visually unobtrusive. (Camp Wilmont Sweeney and Las Vistas Home, when they attain 50 years of age, should be evaluated separately for their architectural significance within the context of juvenile detention and the career of Chester H. Treichel; they should not be considered part of the original Juvenile Hall complex being evaluated.)

Under Criterion A/1 (history), the original Alameda County Juvenile Hall represents one of the most ambitious juvenile-detention projects undertaken in California in the decade following World War II. These years comprise an important historical period in the development of juvenile halls in California, as the state government established a new agency and adopted new standards for the diagnosis and treatment of juvenile crime. County governments built numerous detention facilities in the late 1940s and 1950s in response to the rapidly growing problem of juvenile delinquency. The Alameda County Juvenile Hall was the third-largest and third-costliest facility of its kind to be built in California between 1945 and 1956, surpassed only by juvenile halls in Los Angeles and San Francisco. The San Francisco facility is to be substantially rebuilt beginning in the fall of 2002, which will make the Alameda County facility the largest intact juvenile hall from the postwar decade in northern California. (The status of the old Los Angeles County Juvenile Hall is not known; apparently some buildings have been demolished and others added, but it is difficult to assess integrity without a detailed study.)

Under Criterion B/2 (significant persons), the Alameda County Juvenile Hall is not known to be directly associated with historically significant persons. Therefore it lacks significance under Criterion B/2.

Under Criterion C/3 (architecture), the Alameda County Juvenile Hall is a major example of institutional work by the firm of Kent & Hass and its principal designer, Andrew T. Hass. Although this firm did not play a leading role in the architectural history of the San Francisco Bay Area, it is representative, in its general conservatism and competence, of many firms of the era. The functional, modernist design of the complex conveys the essence of juvenile-hall design in California in the postwar decade, and its prison-like feeling conveys the culture's preoccupation with crime as well as the pervasive paranoia and repressiveness of American society during the Cold War era.

B12. References

SOURCES

GENERAL SOURCES

Alameda County Probation Department. *1953 Annual Report*. March 1954.

Alameda County Probation Department. *Philosophy and Services*. June 1965.

Alameda County Probation Department. *Juvenile Hall*. n.d. (ca. 1968).

Alameda County Probation Department. *Juvenile Hall Manual*. January 1987.

Alameda County Probation Department. *Facts: 2000–2001*.

California State Board of Charities and Corrections. *Biennial Reports*. 1910–1922.

California Youth Authority. *Handbook for the Operation of Juvenile Halls*. Sacramento: Department of the Youth Authority, 1955.

California Youth Authority. *Juvenile Halls of California*. Sacramento: Department of the Youth Authority, 1956.

Corbett, Michael, URS Corp. *Solano County Juvenile Hall; Cooperative Extension/Agricultural Department*. California Department of Parks and Recreation Primary Record Form (DPR 523A), December 2000.

Harris, Philip W., Wayne N. Welsh, and Frank Butler. *A Century of Juvenile Justice*. 2000 (on-line document).

Hengerer, Gertrude, ed. *California Children in Detention and Shelter Care*. Los Angeles: California Committee on Temporary Child Care, March 1955.

Oakland Cultural Heritage Survey. Research files and evaluation sheets for Andrew T. Hass and Chester H. Treichel.

Roush, David W., Ph.D. *Desktop Guide to Good Juvenile Detention Practice*. East Lansing, Michigan: National Juvenile Detention Association, 1996.

Sifakis, Carl. *The Encyclopedia of American Crime*. 2nd Ed., Vol. 1. New York: 2001.

NEWSPAPERS AND MAGAZINES

Alameda Times-Star

"$2,400,000 New Alameda County Juvenile Hall; March 15 Set for Opening of New Quarters to Aid Youngsters Held in Custody" (27 Jan 1953).

"Obituaries—Andrew T. Hass" (12 Jan 1979).

Architect and Engineer

"[Chester H. Treichel] Opens Oakland Office" (September 1929).

"Work of Kent and Hass" (January 1933).

County Officer

McIver, Janice, Alameda County Public Information Director. "Juvenile Hall—Public Panacea" (April 1952).

Oakland Post Enquirer

"Probe Bares Squalor at Detention Home; Youths Jailed in 'Flop House" (2 Feb 1946). "Architect Given Contract for New Juvenile Hall" (10 Aug 1949).

Oakland Tribune

"Child Home Location Hit; Residents Protest $1,000,000 Site" (23 April 1946).

"Seven Detention Sites Proposed" (25 June 1946).

"Site for New Juvenile Hall; Old County Jail Acreage Selected by Court" (7 Feb 1947).

"Juvenile Hall Near Hospital" (24 April 1947).

"First Plans Are Approved for Alameda Juvenile Hall" (March 1950).

"$2,107,000 Low Bid is Accepted for Construction of New Juvenile Hall; Oakland Company Awarded Contract by Supervisors" (9 Feb 1951).

"New Juvenile Hall to be Paid for When it Opens" (22 Jan 1953).

"Youth Will be Served; New $2,000,000 Juvenile Hall for Alameda County to be opened next month" (Feb 1953).

"New County Juvenile Hall to Help Misguided Youth: Humanity First" (12 Mar 1953).

B12. References

"County's $2,207,575 Juvenile Hall Will Be Dedicated Today; New Center's Facilities Designed to Save Boys from Future Trouble" (15 Mar 1953).

"$2,207,575 Juvenile Hall Is Dedicated; 4500 attend program and tour grounds of new county institution" (16 Mar 1953).

"County to Try Out Charm School for Wayward Girls" (18 May 1957).

"New County Juvenile Camp to Launch Work Program" (7 Sept 1958).

"Juvenile Hall Riot Quelled by 70 Police; 2 counselors hurt, windows, furniture smashed by mob" (22 Feb 1959).

"Las Vistas Home for Girls to be Dedicated Today" (13 Sept 1959).

"Juvenile Facilities Range from Worst to Best" (22 Feb 1961).

"Second Unit Dedicated at Girls' Home" (22 April 1961).

"Bids to Open for Juvenile Home Project" (10 July 1961).

"Successes Cited by Chabot Ranch; Problems Met" (26 Nov 1961).

"Young Delinquents Jam County Cells" (28 Nov 1964).

Oakland Tribune Year Book

Advertisement for Chester H. Treichel (1930).

Advertisement for Chester H. Treichel (1931).

San Francisco Chronicle

"Supervisors Deny Fund for Boys' Adjustment School" (14 May 1929).

"Women to Demand New Detention Site" (18 February 1937).

"Dedication of San Leandro Center" (8 March 1953).

"Alameda County Previews $2,550,457 Juvenile Hall" (15 March 1953).

DRAWINGS

Alameda County General Services Agency, Building Maintenance Department. *Chabot Boys Camp, Floor Plans*. Six Sheets, February 1974 and April 1983.

Alameda County General Services Agency, Building Maintenance Department. *Las Vistas, Floor Plans*. Six Sheets, February 1973, February 1976, and July 1984.

Alameda County Public Works Department. *Sanitary Sewer, Senior Boys Camp, San Leandro, California*. Three sheets, September 1957.

Alameda County Public Works Department, Engineering and Architectural Division, 22 W. Winton Avenue, Hayward. *Chabot Ranch Director's Residence, San Leandro, Alameda County, California*. Five sheets, approved November 1962.

Alameda County Public Works Department, Building Maintenance Division. *Juvenile Hall, Floor Plans*. November 1972.

Alameda County Public Works Agency, Architectural Services Department, 951 Turner Court, Hayward, and Glumac and Associates, Inc., Consulting Engineers, 275 Battery Street, San Francisco. *HVAC/Life Safety Systems at Juvenile Hall, 2200 Fairmont Drive, San Leandro*. Forty-one sheets, 1 April 1994.

Apaydin, Angel, Lockwood Architects, 1044 University Avenue, Berkeley; Milton G. Leong, Structural Engineer, 15 Shattuck Square, Berkeley; Chamberlain & Painter, Mechanical and Electrical Engineers, 709 Mission Street, San Francisco. *Juvenile Hall Expansion, Alameda County, 2200 150th Avenue, San Leandro, California*. Ninety-nine sheets, 4 August 1969, 13 February 1970, 16 November 1970, 23 May 1972 ("as built").

ATI Engineering Services, Inc., 2010 Crow Canyon Place, San Ramon. *Seismic Repairs to Dormitory Building, Senior Boys Camp, San Leandro, California*. Four sheets, 25 October 1993.

ATI Engineering Services, Inc., 3860 Blackhawk Road, Danville. *Snedigar Cottage: Final Review*. Ten sheets, 29 September 1995.

COSCO Fire Protection, Inc. *Dormitory Fire Protection System, Los Cerros Juvenile Hall Facility, 2600 Fairmont Drive, San Leandro, California*. Three sheets, 6 January 1994.

Degenkolb, H. J., & Associates, Consulting Engineers, 350 Sansome Street, San Francisco. *Seismic Strengthening of Selected Buildings, Juvenile Hall, Alameda County*. Eight sheets, 9 February 1981.

B12. References

Glass, William, and Associates, Inc., 22245 Main Street, Hayward. *Dining Room Expansion, Los Cerros Camp Dining Hall Facility, 2600 Fairmont Drive, San Leandro, California*. Seven sheets, 28 October 1991.

Hass, Andrew T., 525 Market Street, San Francisco. *Plot Plans, Juvenile Hall, Alameda County, California*. Seven sheets, 21 August 1950 and 12 December 1950.

Hass, Andrew T., 525 Market Street, San Francisco. *Administration Building, Juvenile Hall, Alameda County, California*. Twenty-one sheets, 12 December 1950.

Ishimaru, O'Neill & Simmons, 577 Fifth Street, Oakland. *Classroom Building, Senior Boys Camp, San Leandro, California*. Thirty-one sheets, 15 May 1975.

Treichel, Chester H., 696 Cleveland Street, Oakland. *Senior Boys Camp, San Leandro, Alameda County, California*. Twenty-six sheets, 1 June 1957.

Treichel, Chester H., 696 Cleveland Street, Oakland, California. *Juvenile Home for Girls, San Leandro, California*. Thirteen sheets, 12 November 1958.

Treichel and Gibbs, Architects, 360 Seventeenth Street, Oakland. *Juvenile Home for Girls—Unit 3, San Leandro, California*. Nineteen sheets, 27 June 1961.

P5a. Photo, continued

Photo 2: Administration – Front Façade and Entrance (View to SE)

P5a. Photo, continued

Photo 3: Administration – Courtyard with Original 1st Floor and 2nd Floor Addition (left) (View to SE)

Photo 4: Administration – South Façade (View to N)

P5a. Photo, continued

Photo 5: Administration – Lobby

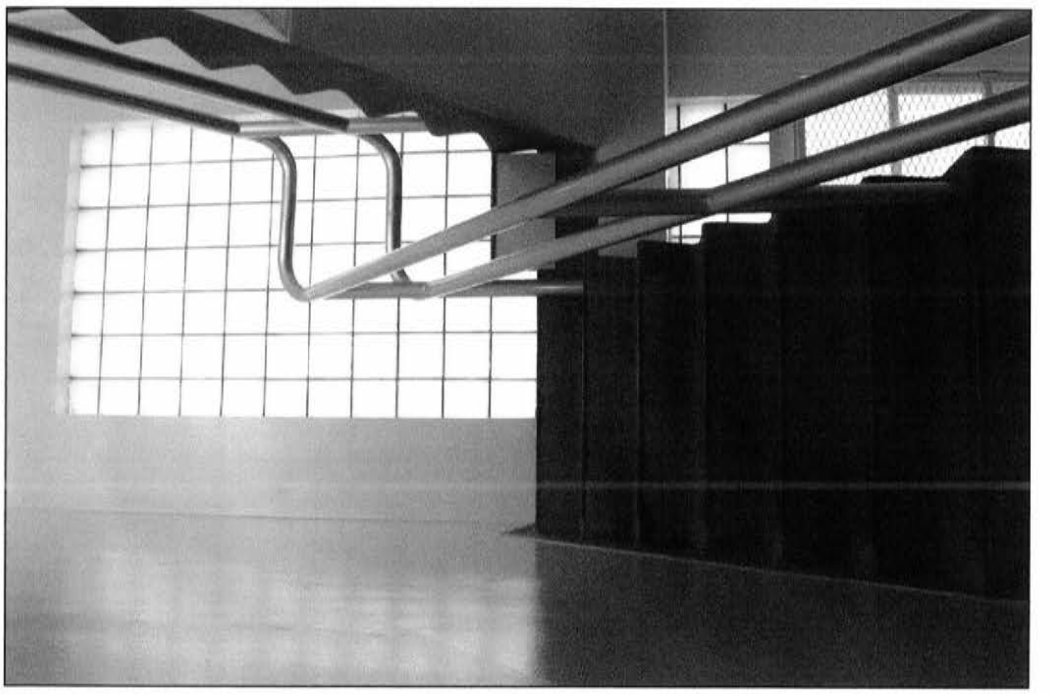

Photo 6: Administration – North Stairwell to Roof

P5a. Photo, continued

Photo 7: Administration – Dining Room

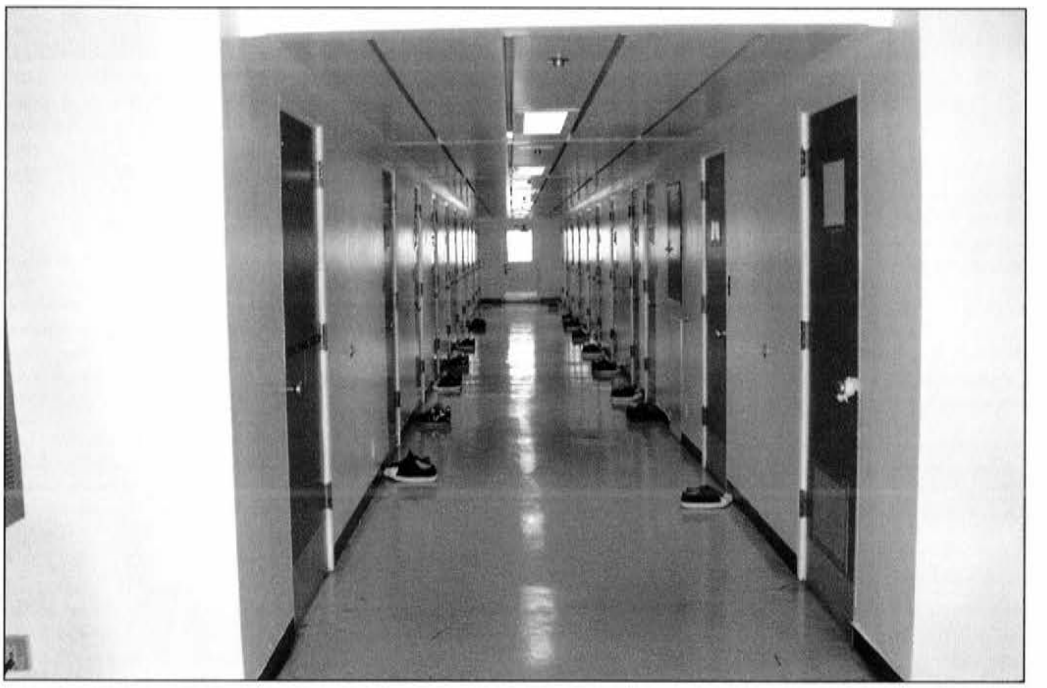

Photo 8: Boys' Unit – Cellblock A, Cell Corridor

P5a. Photo, continued

Photo 9: Boys' Unit – Cellblock A Play Yard; Cellblock C on Right (View to N)

Photo 10: Boys' Unit – Cellblock C Play Yard (View to SW)

P5a. Photo, continued

Photo 11: Girls' Unit – Home Economics Room (current lunchroom)

Photo 12: Girls' Unit – Play Yard with Gymnasium in Background (View to N)

P5a. Photo, continued

Photo 13: Girls' Unit (View to NE)

Photo 14: Girls' Unit with Gymnasium in Background, Snedigar Cottage in Foreground (View to NE)

P5a. Photo, continued

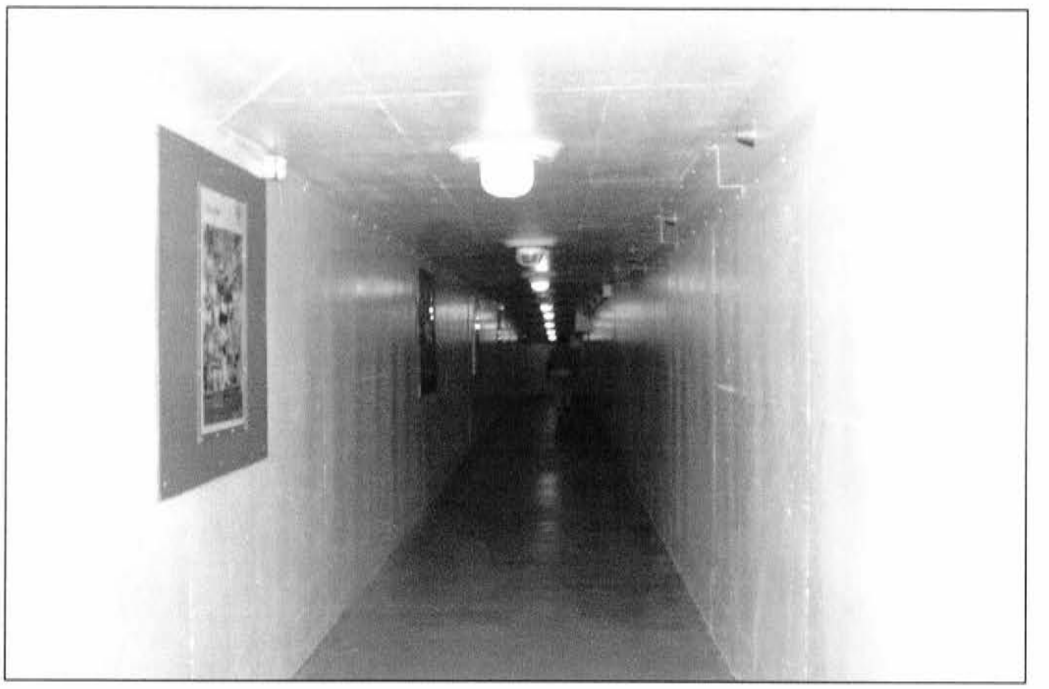

Photo 15: Corridor Between Boys' Unit and Gymnasium

Photo 16: Gymnasium

P5a. Photo, continued

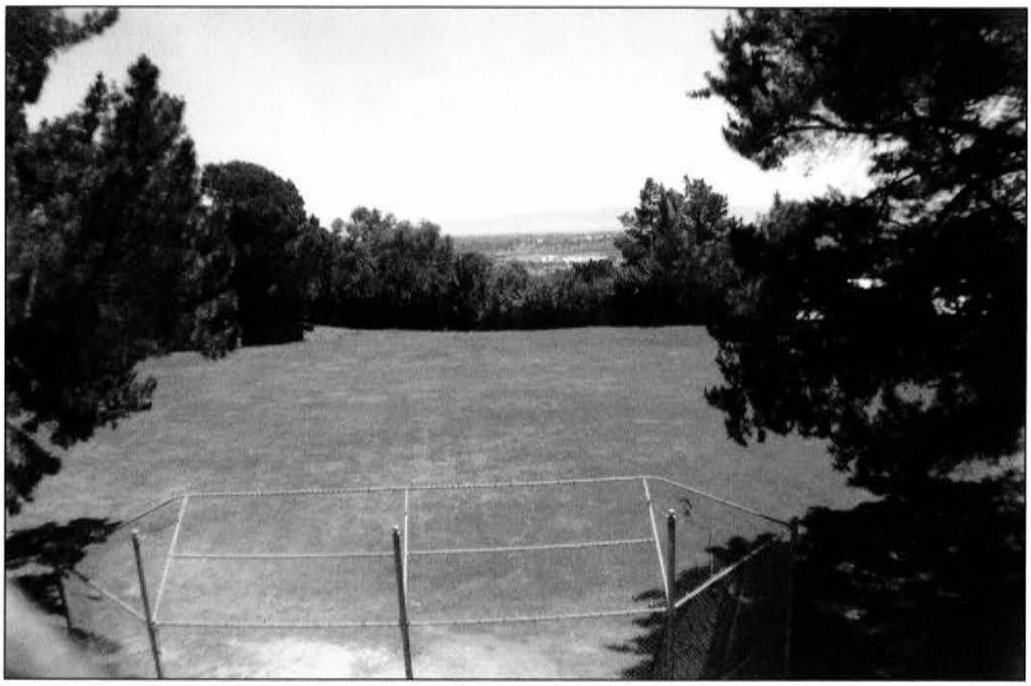

Photo 17: Ballfield (View to W)

Photo 18: Snedigar Cottage (View to NE)

P5a. Photo, continued

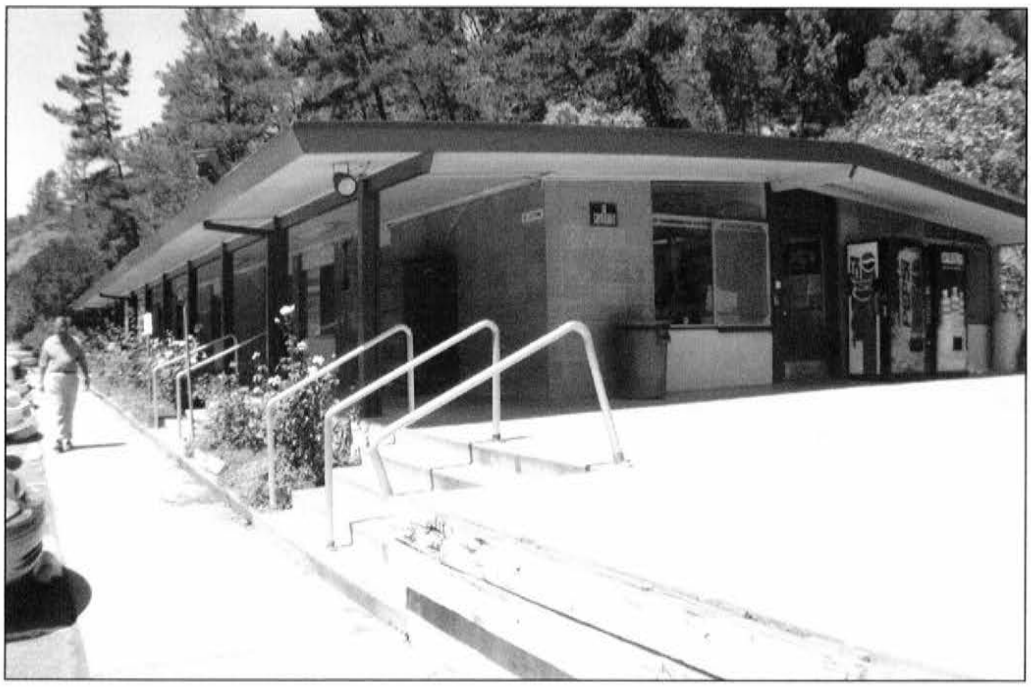

Photo 19: Camp Wilmont Sweeney – Administration Building (View to N)

Photo 20: Camp Wilmont Sweeney – Dining Hall (View to E)

P5a. Photo, continued

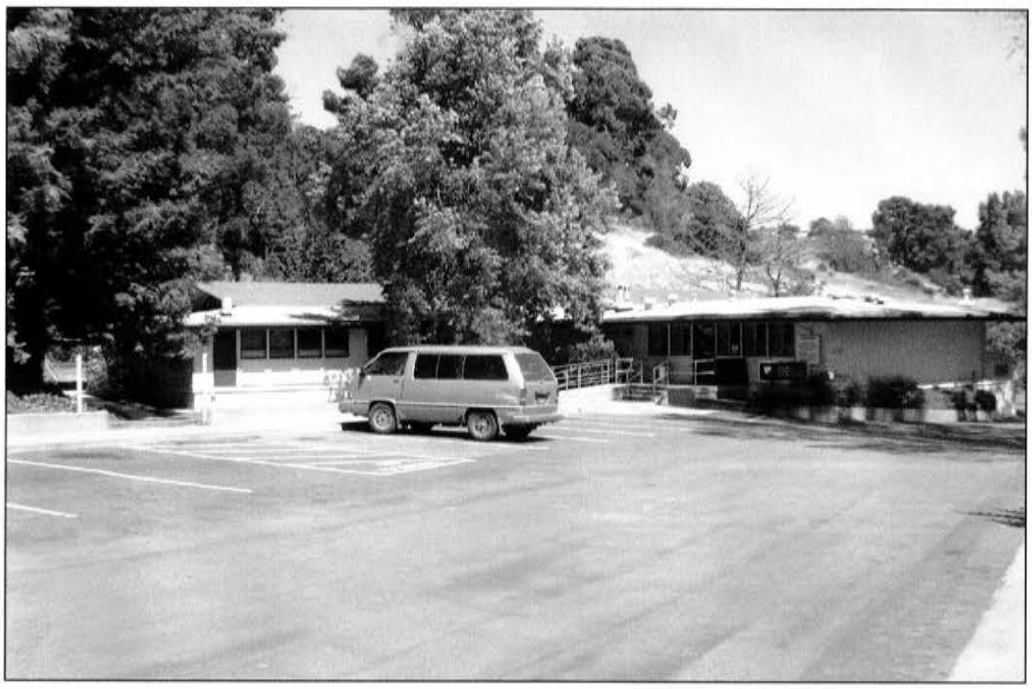

Photo 21: Las Vistas – Unit No. 3 (Day Center) (View to SE)

Photo 22: Las Vistas – Partial View of Unit No. 2 and Passageway (View to N)

P5a. Photo, continued

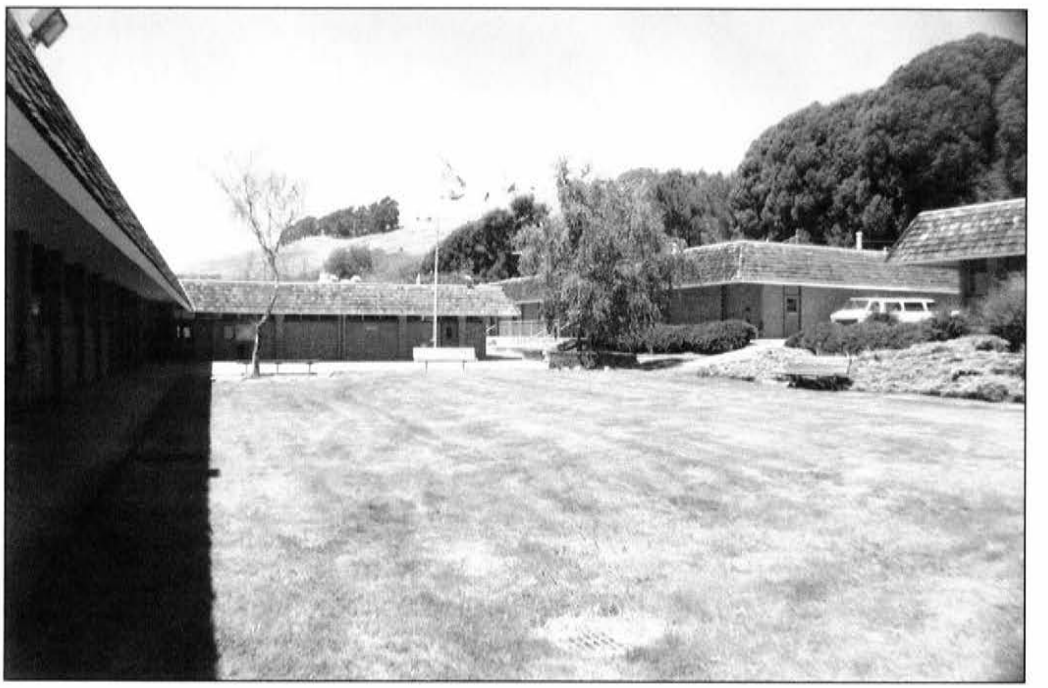

Photo 23: Chabot Ranch – Courtyard (View to N)

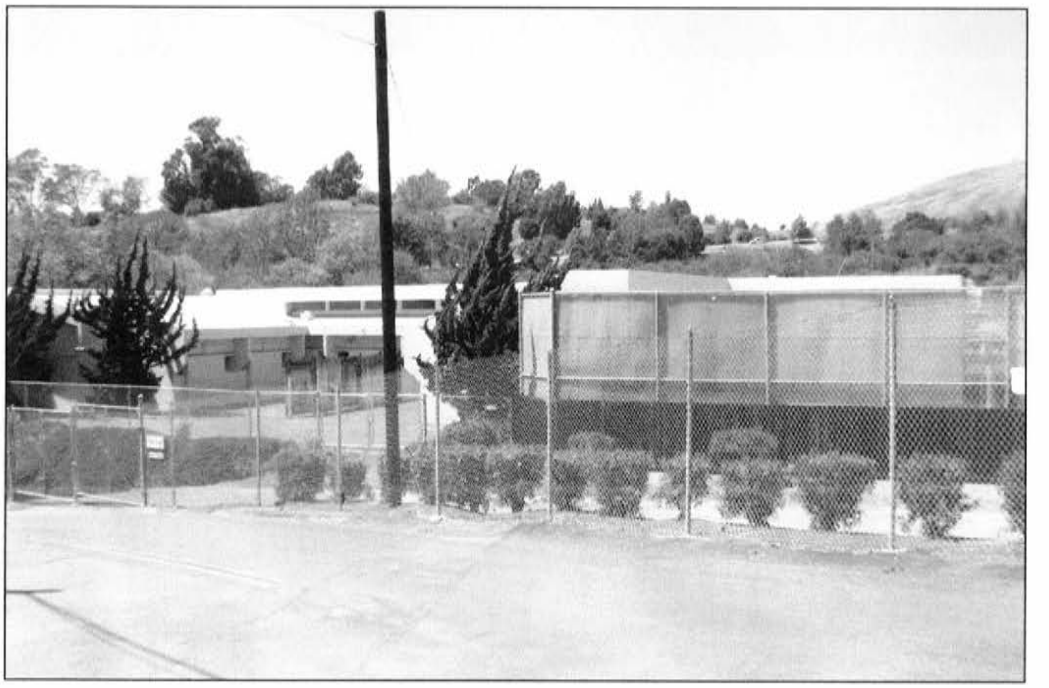

Photo 24: 1972 Detention Facility – South Façade (View to NW)

P5a. Photo, continued

Photo 25: 1972 Receiving Center – West Façade (View to SE)

Photo 26: 1972 Receiving Center, Showing Walkway to Administration (View to SE)

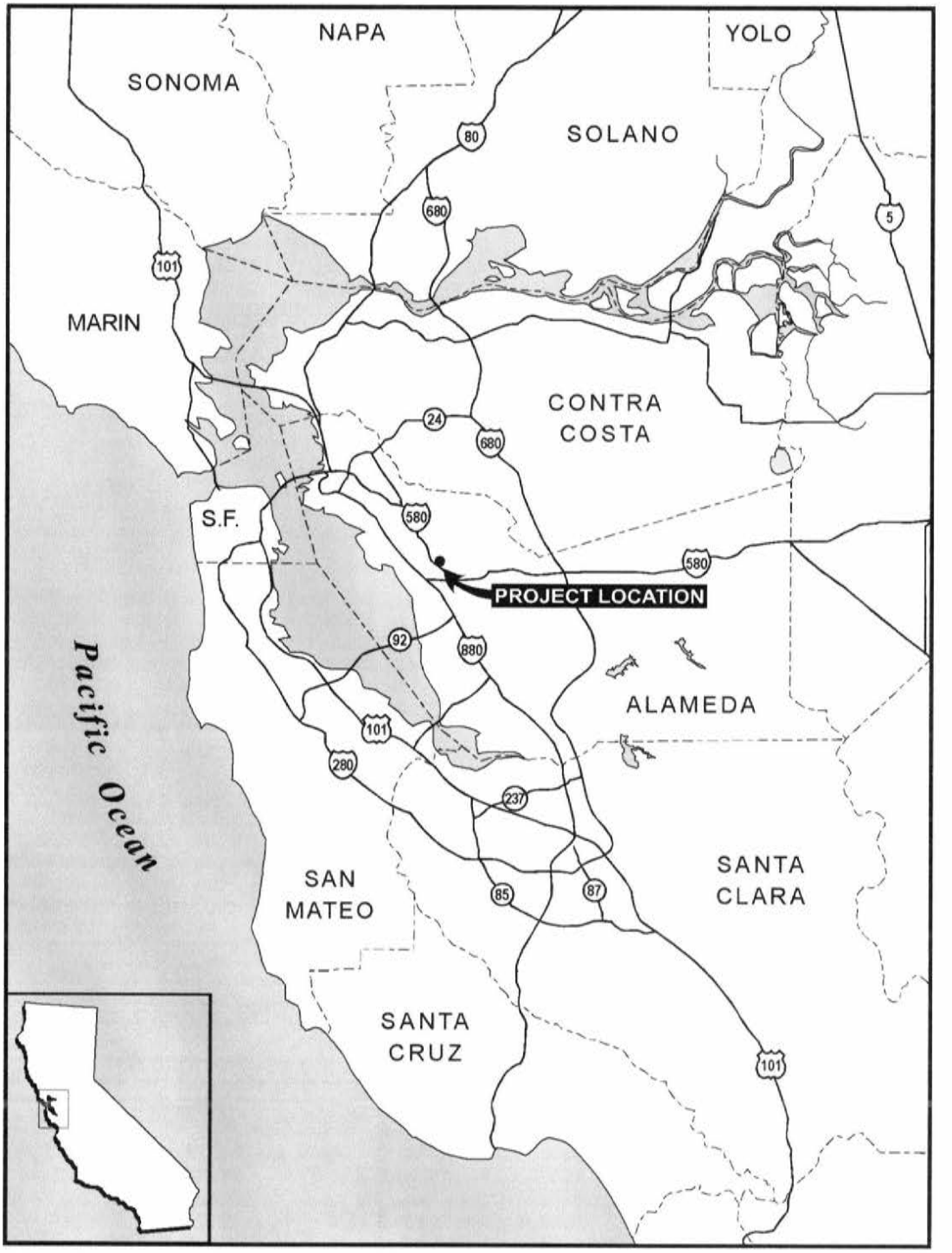

Figure 1: General Project Location

State of California – The Resources Agency
DEPARTMENT OF PARKS AND RECREATION
LOCATION MAP

Primary # P-01-010525
HRI #
Trinomial

Page 24 of 25
Resource Name or #: (assigned by recorder) Alameda County Juvenile Hall
USGS QUAD Hayward, Calif.
Date: 1980
☒ Continuation ☐ Update

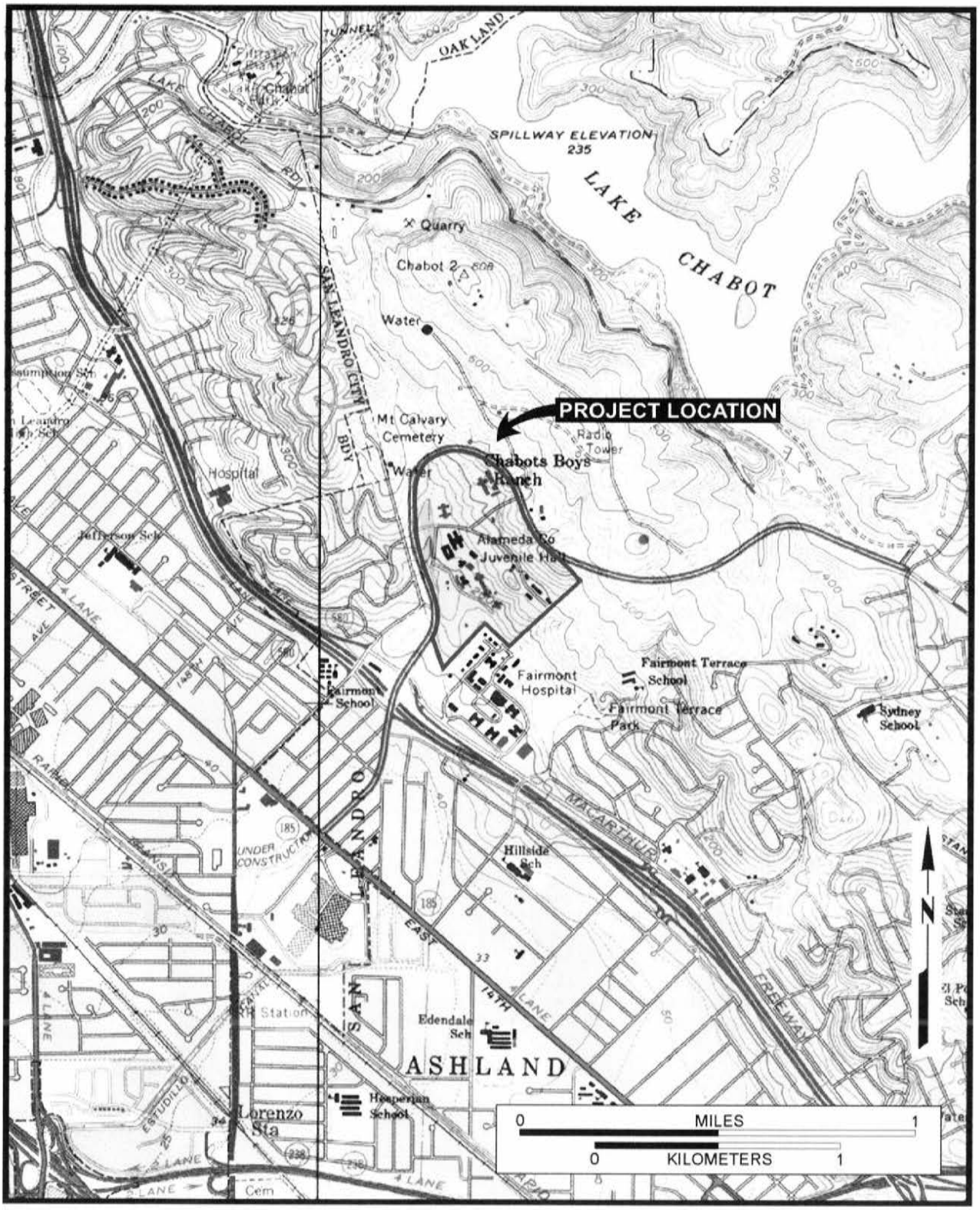

Figure 2: Project Location (USGS San Leandro, Calif. 1980 and Hayward, Calif. 1980)

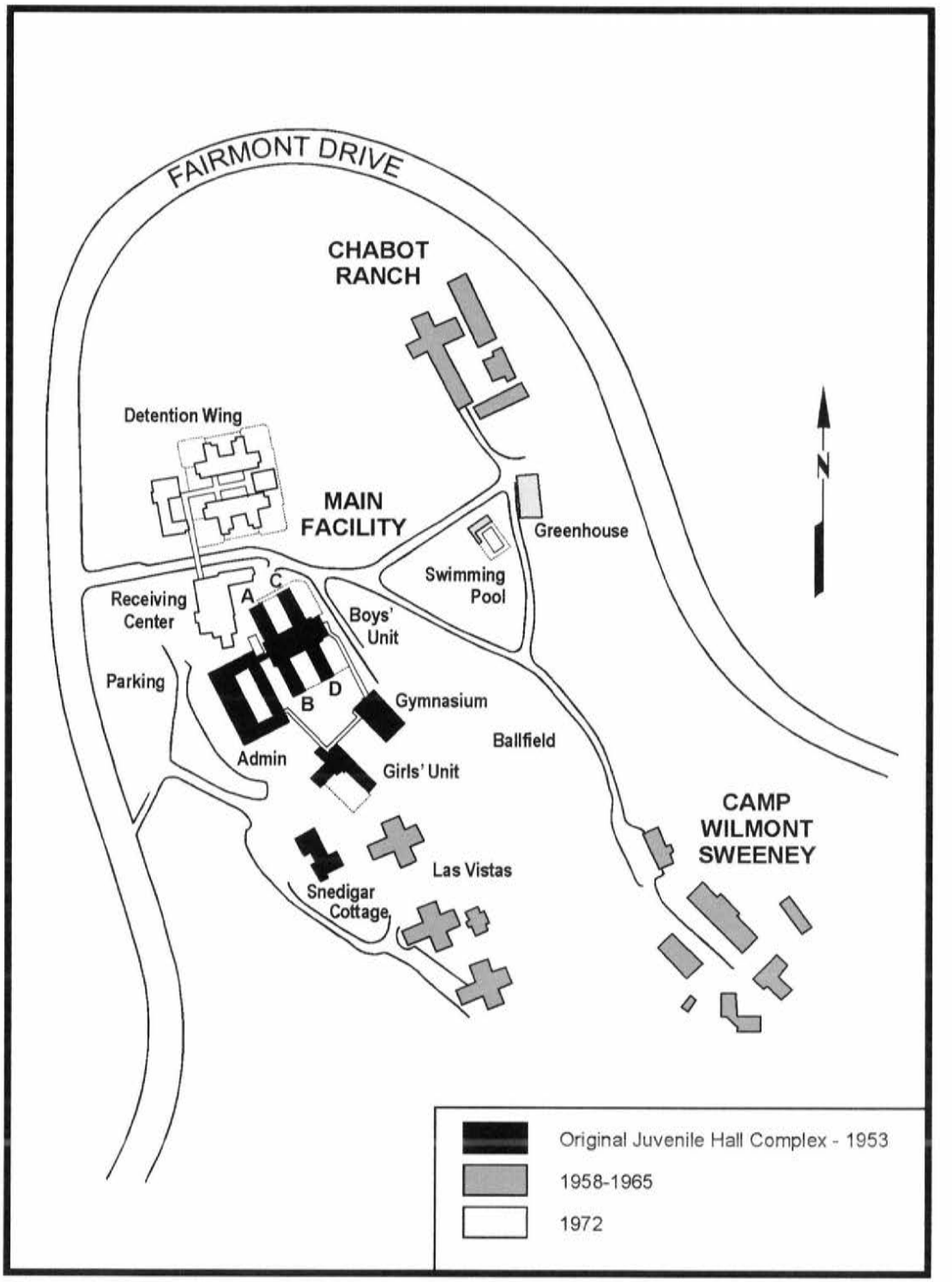

Figure 3: Alameda County Juvenile Hall Complex

Appendix D

Tree Survey Report –

Camp Sweeney, San Leandro, Alameda County, California

Tim Milliken, Certified Arborist

LSA Associates

January 7, 2016

LSA ASSOCIATES, INC.
157 PARK PLACE
PT. RICHMOND, CALIFORNIA 94801
510.236.6810 TEL
510.236.3480 FAX
BERKELEY
CARLSBAD
FRESNO
IRVINE
PALM SPRINGS
RIVERSIDE
ROCKLIN
SAN LUIS OBISPO

January 7, 2016

Via Email

Nathanial Taylor
Lamphier-Gregory
1944 Embarcadero
Oakland, CA 94606

Subject: Tree Survey Report – Camp Sweeney, San Leandro, Alameda County, California

Dear Mr. Taylor:

Per your request, LSA Associates, Inc. (LSA) presents this tree survey report in support of the proposed Camp Sweeney Project (project). Alameda County Probation Department proposes to construct a new Camp Sweeney campus consisting of new buildings, new parking areas, a new sports field, and new landscaping. The proposed project also includes a modification to approximately 150 feet of the median strip on Fairmont Drive near the North Access Road. The site is within the Castro Valley Urbanized Area[1] (General Plan) and is outside the City of San Leandro in unincorporated Alameda County (County).

Trees are present along the perimeter of the proposed project, around existing buildings, in the parking lot islands, and in the median strip on Fairmont Drive (Figure 1). Except for a few trees located along the County's right-of-way (ROW) and a few outside of the project boundary, most of the surveyed trees occur within the main development area of the proposed project. The proposed project will include the removal of most of the trees on the site with the exception of 14 trees that will be preserved and incorporated into the proposed site's landscaping. Because the project is outside the limits of the City of San Leandro, the trees are not protected by the San Leandro Municipal Code's Tree Ordinance. The Alameda County Tree Ordinance[2] (tree ordinance) only protects trees within the County ROW, which consists of the trees in the median strip on Fairmont Drive.

METHODS

Regulatory Framework

LSA reviewed the General Plan for language related to trees. The goals and policies of the plan seek to: 1) maintain, preserve, and enhance trees and vegetation to provide environmental and aesthetic benefits; 2) continue to implement and enforce the tree ordinance to protect trees in the public right-of-way; and 3) maintain and enhance the existing environment by preserving existing native trees and plants whenever feasible, replacing trees on-site and adding trees and other vegetation in the public ROW.

LSA also reviewed the County tree ordinance to confirm which trees within un-incorporated areas of the County are protected, what permits are needed for their removal, and the type of mitigation

[1] The Castro Valley Area Plan is part of the Alameda County General Plan and is the governing document that covers land use and conservation elements.
[2] Title12 Chapter 11 of the General Ordinance Code of the County of Alameda, Regulation of Trees in the County Right-of-Way.

required, if any. The tree ordinance seeks to preserve trees located within the County ROW and to control the planting, maintenance and removal of those trees. Trees on private land are not protected by the County tree ordinance.

Fieldwork

LSA's certified arborist Timothy Milliken (International Society of Arboriculture Certification #WE5539A) conducted the tree survey on November 5 and 6, 2015. The tree survey involved assigning a number, recording the species, condition, and trunk diameter at breast height (DBH; in inches as measured 4.5 feet above natural grade) of each tree occurring within the approximate boundary of the proposed project, a few trees just outside of the project boundary, and a few trees within the median of Fairmont Avenue. If an individual tree had multiple trunks, the diameters of all the trunks were totaled. The location of all numbered trees was registered on a base map of the proposed project (Figure 1).

The health and structural condition of each tree were classified in the field as follows:

- Good – Trees with good health and structure that have potential for longevity on site;
- Fair – Trees with somewhat declining health and/or structural defects; or
- Poor – Trees in poor health or with significant structural defects that cannot be mitigated. Trees in this category are expected to continue to decline.

RESULTS

Regulatory Review – County Tree Ordinance

Per Section 12.11.110, a tree encroachment permit is required prior to the removal of any tree in the County ROW. The application for an encroachment permit shall be filed with the Director of the Alameda County Public Works Agency (Director).

Section 12.11.170 allows discretionary action on the part of the Director to impose on the permittee a reasonable mitigation effort. In the case of proposed tree removal within the County ROW, such mitigation might include, for example, efforts to replace an existing tree or trees with one or more trees of a type consistent with the character of the neighborhood.

Tree Survey

A total of 103 trees were surveyed on the proposed project site (97 inside the project boundary and 6 on the County ROW (Table A, Figure 1). Additionally, 10 trees were surveyed outside of the project boundary for a total of 113 surveyed trees (Table B, Figure 1). Two of these tree species occur naturally in the local region: coast live oak (*Quercus agrifolia*), and coast redwood (*Sequoia sempervirens*). Table B contains additional information on the trees identified on the project site and within the County ROW including tree number, scientific and common name, DBH, condition, and anticipated impact category. Trees outside of the project boundary are not included in Summary Table A. Impact categories include Permanent Impact (removal) and No Impact (retained). Based upon comparison of mapped tree locations with the proposed project plan, the proposed project would permanently impact (remove) 89 trees. The proposed project would protect (retain) 24 trees (13 inside the project boundary, 1 on the County ROW, and 10 just outside of the project boundary).

Permanent Impacts to Trees – The proposed project would permanently remove 89 trees (84 trees within the project site and 5 trees on Fairmont Drive). The trees that would be permanently impacted are detailed in Table B.

No Impact – A total of fourteen (14) trees within the project site (13 inside the project boundary and 1 on the County ROW) and 10 trees just outside of the project boundary would not be impacted by the proposed project. The proposed project would include tree protection measures for 3 sugar gum (*Eucalyptus cladocalyx*), 3 mana gum (*Eucalyptus viminalis*), 1 glossy privet (*Ligustrum japonicum*), 2 sweetgum (*Liquidambar styraciflua*), 1 mayten (*Maytenus boaria*), Catalina cherry (*Prunus ilicifolia*), 1 cork oak (*Quercus suber*), 1 red willow (*Salix laevigata*) , and American arborvitae (*Thuja occidentalis*). Tree protection measures are provided in the following section.

Table A: Summary of Trees Within the Project Boundary and County ROW

Species Classification	Trees within Study Area	Remove	Retain
Blackwood acacia (*Acacia melanoxylon*)	**3**	**3**	**0**
Fern pine (*Afrocarpus gracilior*)	**4**	**4**	**0**
Atlas cedar (*Cedrus atlantica*)	**2**	**2**	**0**
Camphor (*Cinnamomum camphora*)	**1**	**1**	**0**
Red flowering gum (*Corymbia ficifolia*)	**1**	**1**	**0**
Sugar gum (*Eucalyptus cladocalyx*)	**6**	**3**	**3**
Blue gum eucalyptus (*Eucalyptus globulus*)	**7**	**7**	**0**
Mana gum (*Eucalyptus viminalis*)	**17**	**14**	**3**
Evergreen ash (*Fraxinus uhdei*)	**4**	**4**	**0**
Gingko (*Ginkgo biloba*)	**4**	**4**	**0**
Glossy privet (*Ligustrum japonicum*)	**2**	**1**	**1**
Sweetgum (*Liquidambar styraciflua*)	**5**	**3**	**2**
Mayten (*Maytenus boaria*)	**2**	**1**	**1**
Myoporum (*Myoporum laetum*)	**5**	**5**	**0**
Date palm (*Phoenix* sp.)	**4**	**4**	**0**
Monterey pine (*Pinus radiata*)	**3**	**3**	**0**
Chinese pistache (*Pistacia chinensis*)	**2**	**2**	**0**
Victorian box (*Pittosporum undulatum*)	**2**	**2**	**0**
London plane (*Platanus* x *acerifolia*)	**2**	**2**	**0**
Catalina cherry (*Prunus ilicifolia*)	**1**	**0**	**1**
Coast live oak (*Quercus agrifolia*)	**4**	**4**	**0**
Evergreen oak (*Quercus ilex*)	**1**	**1**	**0**
Cork oak (*Quercus suber*)	**3**	**2**	**1**
Italian buckthorn (*Rhamnus alaternus*)	**5**	**5**	**0**
Sugar bush (*Rhus ovata*)	**1**	**1**	**0**
Red willow (*Salix laevigata*)	**1**	**0**	**1**
Pepper (*Schinus molle*)	**3**	**3**	**0**
Coast redwood (*Sequoia sempervirens*)	**1**	**1**	**0**
Yew (*Taxus baccata*)	**2**	**2**	**0**
American arborvitae (*Thuja occidentalis*)	**5**	**4**	**1**
Grand Total	**103**	**89**	**14**

CONCLUSIONS

The proposed project requires the removal of 89 trees and the retention of 14 trees. The proposed project would include tree protection measures for 14 trees. Tree protection measures are provided in the following section.

The proposed removal of trees within the County ROW would be reviewed by the Director prior to the issuance of an encroachment permit. The Director, at his/her discretion, may require mitigation for the removal of trees within the County ROW. To off-set impacts related to tree removal, LSA recommends replanting County ROW trees with mana gum at a one to one ratio (the same species proposed to be removed). However, due to the space constraints in the area where the trees proposed for removal, consultation with the Director would be necessary to determine an appropriate location for replacement trees.

TREE PROTECTION MEASURES

The proposed project intends to retain 14 trees within the proposed project site boundary. The proposed project may also choose to retain other trees within the site boundary or adjacent to the proposed project. Additional trees occur within the median of the County ROW that are not proposed to be removed. Retained trees on or associated with the project site should be avoided during the construction phase by following Best Management Practices as outlined below.

Tree Avoidance. The proposed project shall avoid any impact to as many trees as feasible. The proposed project shall also incorporate placement of tree protection fencing outside of the drip line of retained trees.

Tree Protection Zone. All trees to be retained shall be enclosed within a Tree Protection Zone (TPZ) in order to prevent direct damage to the trees and their growing environment. The TPZ (shown on the plan) will be constructed from blaze orange barrier fencing supported by metal “T rail” fence posts. The TPZ will be placed at a distance that is at or outside of the drip lines of retained trees to the extent feasible based on the limits of the area to be graded. TPZ fencing will be installed before site preparation, construction activities, or tree removal/trimming begins, and will be installed under the supervision of a qualified arborist.

Use of Heavy Equipment. Heavy machinery will not be allowed to operate or park within or around areas containing retained trees (unless these areas are currently a paved surface). If it is necessary for heavy machinery to operate within the dripline of retained trees, then a layer of mulch or pea gravel at least 4 inches in depth will be placed on the ground beneath the dripline. A ¾-inch sheet of plywood will be placed on top of the mulch. The plywood and mulch will reduce compaction of the soil within the dripline. The plywood and mulch will be removed once construction is complete.

Storage of Construction Materials and Debris. Construction materials (e.g., gravel, aggregate, heavy equipment) or project debris and waste material will not be placed adjacent to or against the trunks of retained trees. Furthermore, no poison or other substance harmful to trees shall be allowed to lie, leak, pour, flow or drip upon or into the soil within the dripline of any tree located within the County ROW.

Incidental Damage to Protected Trees. The attachment of wires, nails, tacks, staples, advertising posters or signs, and ropes to any County ROW tree is strictly prohibited. This restriction is not intended to apply to staking or other material used to secure a tree.

Trimming. Although no specific branch or branches are recommended for removal from retained trees, tree trimming may be required to allow the movement of construction machinery.

1. Unless excepted by the Director in writing in the encroachment permit or otherwise, removal of any tree located in the County ROW for which an encroachment permit is required shall be performed by a contractor holding a valid license of the appropriate classification as described by the California Business and Professions Code and such other additional valid license(s) required under federal or State law to do the proposed work. In addition to the requirements established by the Director, LSA recommends that the licensed contractor be familiar with International Society of Arboriculture (ISA) pruning guidelines and shall comply with these guidelines established by the ISA publication Best Management Practice for Tree Pruning[3];
2. All branches to be removed will be pruned back to an appropriate sized lateral or to the trunk by following proper pruning guidelines;
3. All trimming will be conducted by or under the supervision of a certified arborist.

SUMMARY

- Of the 89 trees to be removed, 5 are within the County ROW and are regulated by the County tree ordinance;
- The proposed project will retain 14 trees;
- The Director may require replacement of the County ROW regulated trees;
- Recommended mitigation for removal of County ROW trees includes the planting and maintaining trees as follows:
    - 1:1 replacement ratio of one tree planted for each County ROW tree removed (plant the same species as those removed) in a location to be determined by consultation with the Director.

3 Gilman, E. F. and S. J. Lilly. 2002. Best Management Practices, Tree Pruning. A companion publication to the ANSI A300 Part 1: Tree, Shrub, and Other Woody Plant Maintenance – Standard Practices, Pruning. Published by International Society of Arboriculture, Champagne, IL.

LSA appreciates the opportunity to provide this tree survey report to you. Please feel free to contact me or Ross Dobberteen, Principal-in-charge, if you have questions or comments regarding this letter report.

Sincerely,

LSA ASSOCIATES, INC.

Timothy Milliken
International Society of Arboriculture Certified Arborist WE-5539A

Attachment:

Figure 1: Tree Map
Table B: Tree Table

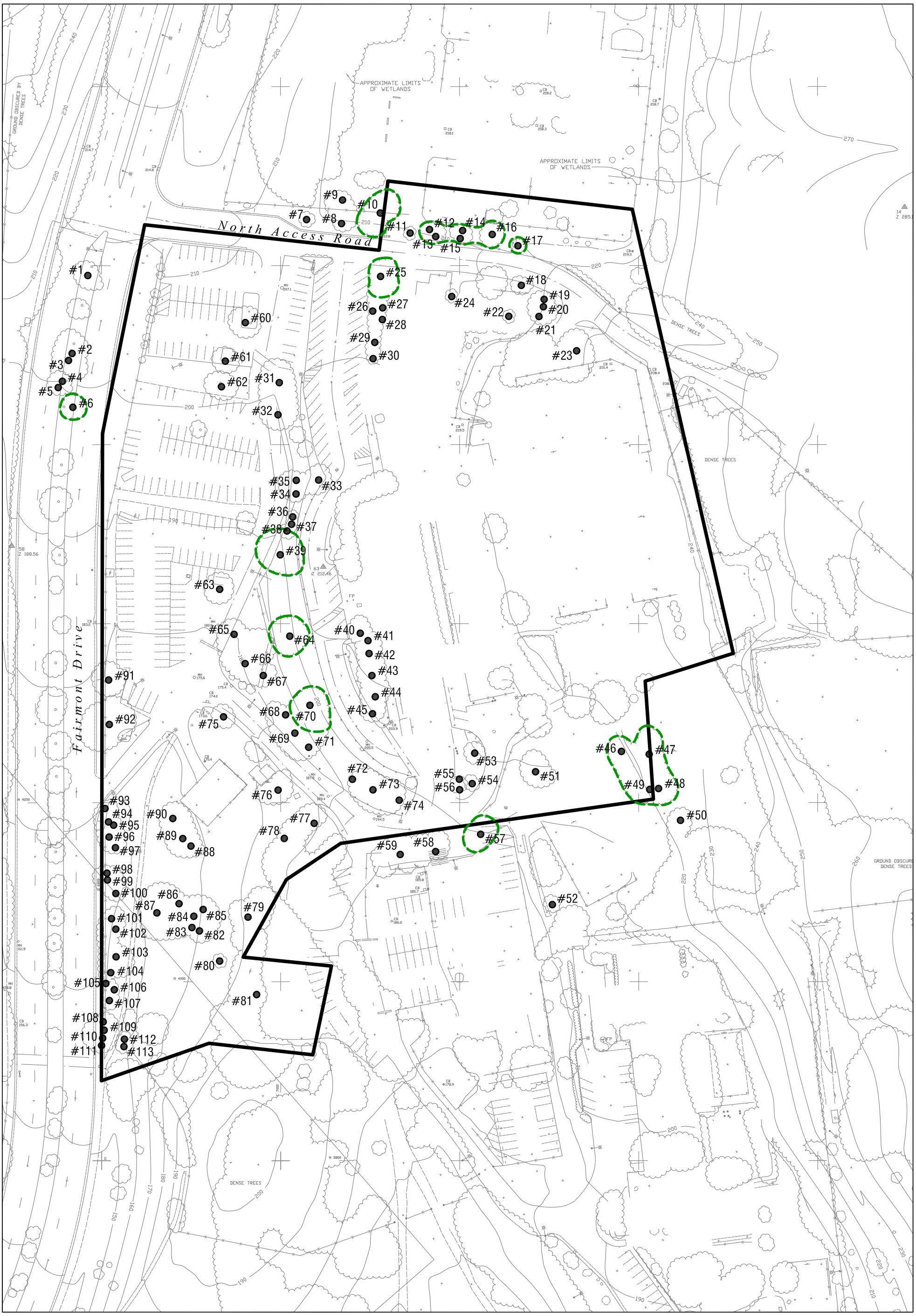

LSA

N

0 50 100
FEET

LEGEND

Approximate Site Boundary Line

#1 Tree and Tree Number

Tree Protection Zone

Note: Cloud shapes on the map refer to existing trees and vegetation, as well as trees and vegetation that have been removed prior to the survey.

FIGURE 1

Camp Sweeney
Alameda County Probation Department

Tree Survey

P:\LRY1501\g\Figure 1_Tree Survey.dwg (12/7/2015)

Table B: Detailed Data for Trees on the Camp Sweeney Project Site

Tree Number	Species Classification	Diameter (inches)	Condition	Structure	In County Right-of-Way	Remove or Retain and Protect	Notes
1	Mana gum (*Eucalyptus viminalis*)	24	Fair	Poor	Yes	Remove	Tortoise beetles, Eucalyptus long horned beetle, psyllids, and very sparse canopy.
2	Mana gum (*Eucalyptus viminalis*)	30	Fair	Poor	Yes	Remove	Tortoise beetles, Eucalyptus long horned beetle, psyllids, and very sparse canopy. Three stems.
3	Mana gum (*Eucalyptus viminalis*)	32	Fair	Poor	Yes	Remove	Tortoise beetles, psyllids, and very sparse canopy. Broken top.
4	Mana gum (*Eucalyptus viminalis*)	24	Fair	Poor	Yes	Remove	Tortoise beetles, psyllids, and very sparse canopy. Four stems.
5	Mana gum (*Eucalyptus viminalis*)	24	Fair	Poor	Yes	Remove	Tortoise beetles, psyllids, and very sparse canopy.
6	Mana gum (*Eucalyptus viminalis*)	16	Fair	Poor	Yes	Retain and Protect	Tortoise beetles, psyllids, and very sparse canopy.
7	Purple leaf plum (*Prunus cerasifera*)	12	Poor	Poor	No	Retain and Protect	North of North Access Road. Near dead drought stressed. Just outside of project boundary.
8	Sweetgum (*Liquidambar styraciflua*)	12	Good	Poor	No	Retain and Protect	North of North Access Road. Just outside of project boundary.
9	Blue gum eucalyptus (*Eucalyptus globulus*)	100	Fair	Poor	No	Retain and Protect	North of North Access Road. Just outside of project boundary.
10	Blue gum eucalyptus (*Eucalyptus globulus*)	48	Fair	Poor	No	Retain and Protect	North of North Access Road. Just outside of project boundary.
11	Mana gum (*Eucalyptus viminalis*)	6	Fair	Poor	No	Remove	Small 2 stem.
12	Mana gum (*Eucalyptus viminalis*)	18	Fair	Poor	No	Retain and Protect	North of North Access Road. Tortoise beetles, psyllids, very sparse canopy, and poor branch attachment.
13	Sweetgum (*Liquidambar styraciflua*)	18	Good	Good	No	Retain and Protect	Tall, over mature tree with heavy top branches.
14	Mana gum (*Eucalyptus viminalis*)	18	Good	Good	No	Retain and Protect	Two stems.
15	American arborvitae (*Thuja occidentalis*)	24	Good	Poor	No	Retain and Protect	
16	Glossy privet (*Ligustrum japonicum*)	18	Good	Good	No	Retain and Protect	
17	Red willow (*Salix laevigata*)	24	Good	Good	No	Retain and Protect	Two stems, in box culvert.
18	American arborvitae (*Thuja occidentalis*)	12	Good	Good	No	Remove	Keep if possible.

Tree Number	Species Classification	Diameter (inches)	Condition	Structure	In County Right-of-Way	Remove or Retain and Protect	Notes
19	American arborvitae (*Thuja occidentalis*)	12	Good	Good	No	Remove	Keep if possible.
20	American arborvitae (*Thuja occidentalis*)	6	Good	Good	No	Remove	Keep if possible.
21	American arborvitae (*Thuja occidentalis*)	10	Good	Good	No	Remove	Keep if possible.
22	Evergreen ash (*Fraxinus uhdei*)	10	Good	Good	No	Remove	Keep if possible.
23	Red flowering gum (*Corymbia ficifolia*)	36	Good	Good	No	Remove	
24	Glossy privet (*Ligustrum japonicum*)	6	Good	Poor	No	Remove	Shrubby.
25	Sweetgum (*Liquidambar styraciflua*)	32	Good	Poor	No	Retain and Protect	Three stems.
26	Sweetgum (*Liquidambar styraciflua*)	14	Good	Fair	No	Remove	Mature to over-mature.
27	Yew (*Taxus baccata*)	18	Good	Fair	No	Remove	
28	Yew (*Taxus baccata*)	18	Good	Fair	No	Remove	
29	Sweetgum (*Liquidambar styraciflua*)	18	Good	Fair	No	Remove	
30	Sweetgum (*Liquidambar styraciflua*)	18	Good	Fair	No	Remove	
31	London plane (*Platanus* x *acerifolia*)	24	Good	Good	No	Remove	
32	London plane (*Platanus* x *acerifolia*)	24	Good	Good	No	Remove	
33	Evergreen ash (*Fraxinus uhdei*)	10	Good	Good	No	Remove	
34	Coast redwood (*Sequoia sempervirens*)	48	Good	Good	No	Remove	Keep if possible.
35	Date palm (*Phoenix* sp.)	48	Good	Good	No	Remove	Small palm could be transplanted.
36	Date palm (*Phoenix* sp.)	48	Good	Good	No	Remove	Small palm could be transplanted.
37	Date palm (*Phoenix* sp.)	48	Good	Good	No	Remove	Small palm could be transplanted.
38	Date palm (*Phoenix* sp.)	48	Good	Good	No	Remove	Small palm could be transplanted.
39	Cork oak (*Quercus suber*)	72	Good	Good	No	Retain and Protect	Specimen Tree. Giant main trunk with three radiating branches. Poison oak underneath.

Tree Number	Species Classification	Diameter (inches)	Condition	Structure	In County Right-of-Way	Remove or Retain and Protect	Notes
40	Gingko (*Gingko biloba*)	24	Good	Good	No	Remove	
41	Victorian box (*Pittosporum undulatum*)	18	Good	Good	No	Remove	
42	Fern pine (*Afrocarpus gracilior*)	32	Fair	Fair	No	Remove	Rot in trunk.
43	Fern pine (*Afrocarpus gracilior*)	52	Good	Poor	No	Remove	Mature tree.
44	Fern pine (*Afrocarpus gracilior*)	48	Good	Poor	No	Remove	Mature tree.
45	Fern pine (*Afrocarpus gracilior*)	36	Good	Poor	No	Remove	Mature tree.
46	Sugar gum (*Eucalyptus cladocalyx*)	18	Good	Good	No	Retain and Protect	Mature tree is unusual because others of same species are ill.
47	Catalina cherry (*Prunus ilicifolia*)	12	Good	Good	No	Retain and Protect	Shrubby 2 stem.
48	Catalina cherry (*Prunus ilicifolia*)	16	Good	Good	No	Retain and Protect	Shrubby 2 stem. Just outside of project boundary.
49	Mayten (*Maytenus boaria*)	6	Good	Good	No	Retain and Protect	Shrubby 2 stem.
50	Catalina cherry (*Prunus ilicifolia*)	16	Good	Good	No	Retain and Protect	Shrubby 2 stem. Just outside of project boundary.
51	Atlas cedar (*Cedrus atlantica*)	36	Good	Good	No	Remove	Nice well-formed tree. Keep if possible.
52	Carob (*Ceratonia siliqua*)	36	Good	Good	No	Retain and Protect	Three stems. Just outside of project boundary.
53	Gingko (*Gingko biloba*)	12	Good	Good	No	Remove	Keep if possible.
54	Gingko (*Gingko biloba*)	8	Good	Poor	No	Remove	
55	Gingko (*Gingko biloba*)	12	Good	Good	No	Remove	Keep if possible.
56	Victorian box (*Pittosporum undulatum*)	12	Good	Poor	No	Remove	Shrubby.
57	Camphor (*Cinnamomum camphora*)	24	Good	Good	No	Retain and Protect	Just outside of project boundary.
58	Camphor (*Cinnamomum camphora*)	24	Good	Good	No	Retain and Protect	Just outside of project boundary.
59	Camphor (*Cinnamomum camphora*)	12	Good	Poor	No	Retain and Protect	Just outside of project boundary.
60	Blue gum eucalyptus (*Eucalyptus globulus*)	100	Good	Good	No	Remove	

Tree Number	Species Classification	Diameter (inches)	Condition	Structure	In County Right-of-Way	Remove or Retain and Protect	Notes
61	Blue gum eucalyptus (*Eucalyptus globulus*)	100	Good	Good	No	Remove	
62	Blue gum eucalyptus (*Eucalyptus globulus*)	100	Good	Good	No	Remove	
63	Sugar gum (*Eucalyptus cladocalyx*)	36	Good	Good	No	Remove	
64	Sugar gum (*Eucalyptus cladocalyx*)	36	Good	Good	No	Retain and Protect	
65	Mayten (*Maytenus boaria*)	24	Good	Good	No	Remove	
66	Atlas cedar (*Cedrus atlantica*)	48	Good	Good	No	Remove	
67	Cork oak (*Quercus suber*)	18	Good	Good	No	Remove	
68	Chinese pistache (*Pistacia chinensis*)	18	Fair	Good	No	Remove	
69	Chinese pistache (*Pistacia chinensis*)	14	Fair	Good	No	Remove	Rot in trunk.
70	Sugar gum (*Eucalyptus cladocalyx*)	72	Good	Fair	No	Retain and Protect	Mature to over-mature.
71	Mana gum (*Eucalyptus viminalis*)	48	Good	Good	No	Remove	
72	Evergreen ash (*Fraxinus uhdei*)		Fair	Fair	No	Remove	Rot in trunk.
73	Evergreen ash (*Fraxinus uhdei*)	24	Fair	Fair	No	Remove	Rot in trunk.
74	Sugar bush (*Rhus ovata*)	24	Good	Fair	No	Remove	Potential for limb failure.
75	Pepper tree (*Schinus molle*)	52	Good	Good	No	Remove	
76	Pepper tree (*Schinus molle*)	100	Good	Good	No	Remove	Good structure good health three stem
77	Camphor (*Cinnamomum camphora*)	100	Fair	Good	No	Remove	Three stems.
78	Cork oak (*Quercus suber*)	6	Good	Fair	No	Remove	
79	Coast live oak (*Quercus agrifolia*)	10	Good	Good	No	Remove	
80	Italian buckthorn (*Rhamnus alaternus*)	12	Good	Fair	No	Remove	Shrubby.
81	Blue gum eucalyptus (*Eucalyptus globulus*)	12	Good	Fair	No	Remove	Two stems.

Tree Number	Species Classification	Diameter (inches)	Condition	Structure	In County Right-of-Way	Remove or Retain and Protect	Notes
82	Italian buckthorn (*Rhamnus alaternus*)	6	Good	Fair	No	Remove	Shrubby.
83	Blue gum eucalyptus (*Eucalyptus globulus*)	18	Good	Good	No	Remove	
84	Evergreen oak (*Quercus ilex*)	8	Good	Good	No	Remove	
85	Italian buckthorn (*Rhamnus alaternus*)	6	Good	Fair	No	Remove	Shrubby.
86	Blackwood acacia (*Acacia melanoxylon*)	6	Good	Good	No	Remove	
87	Blue gum eucalyptus (*Eucalyptus globulus*)	96	Good	Good	No	Remove	
88	Italian buckthorn (*Rhamnus alaternus*)	6	Good	Fair	No	Remove	Shrubby.
89	Blue gum eucalyptus (*Eucalyptus globulus*)	48	Good	Fair	No	Remove	Two stems. Tree appears to have hazardous branches.
90	Sugar gum (*Eucalyptus cladocalyx*)	48	Good	Fair	No	Remove	
91	Monterey pine (*Pinus radiata*)	48	Good	Fair	No	Remove	
92	Mana gum (*Eucalyptus viminalis*)	48	Good	Fair	No	Remove	Multiple stems.
93	Coast live oak (*Quercus agrifolia*)	48	Good	Good	No	Remove	Three stems.
94	Mana gum (*Eucalyptus viminalis*)	48	Good	Fair	No	Remove	Multiple stems.
95	Mana gum (*Eucalyptus viminalis*)	12	Good	Fair	No	Remove	Three stems.
96	Sugar gum (*Eucalyptus cladocalyx*)	48	Good	Fair	No	Remove	Three stems.
97	Myoporum (*Myoporum laetum*)	48	Good	Fair	No	Remove	Three stems.
98	Myoporum (*Myoporum laetum*)	18	Poor	Poor	No	Remove	Three stems.
99	Mana gum (*Eucalyptus viminalis*)	10	Poor	Poor	No	Remove	Three stems.
100	Mana gum (*Eucalyptus viminalis*)	36	Poor	Poor	No	Remove	Three stems.
101	Myoporum (*Myoporum laetum*)	48	Good	Fair	No	Remove	Three stems.
102	Pepper tree (*Schinus molle*)	24	Good	Fair	No	Remove	Two stems.

Tree Number	Species Classification	Diameter (inches)	Condition	Structure	In County Right-of-Way	Remove or Retain and Protect	Notes
103	Monterey pine (*Pinus radiata*)	18	Good	Fair	No	Remove	
104	Monterey pine (*Pinus radiata*)	18	Poor	Fair	No	Remove	
105	Blackwood acacia (*Acacia melanoxylon*)	24	Good	Fair	No	Remove	Three stems.
106	Blackwood acacia (*Acacia melanoxylon*)	6	Good	Fair	No	Remove	
107	Mana gum (*Eucalyptus viminalis*)	24	Good	Fair	No	Remove	
108	Myoporum (*Myoporum laetum*)	12	Good	Fair	No	Remove	Two stems.
109	Myoporum (*Myoporum laetum*)	12	Good	Fair	No	Remove	Two stems.
110	Coast live oak (*Quercus agrifolia*)	12	Good	Fair	No	Remove	
111	Italian buckthorn (*Rhamnus alaternus*)	10	Good	Fair	No	Remove	Two stems.
112	Coast live oak (*Quercus agrifolia*)	12	Good	Fair	No	Remove	Two stems, grows thru fence.
113	Mana gum (*Eucalyptus viminalis*)	12	Good	Fair	No	Remove	Five stems.

Appendix E

Appendices to Transportation Impact Analysis:

Level of Service Methodology

and

Turning Movement Count Data and Traffic Signal Timing Sheets

TJKM Transportation Consultants

November 10, 2015

Appendix F-1 – Level of Service Methodology

LEVEL OF SERVICE

The description and procedures for calculating capacity and level of service are found in Transportation Research Board, *Highway Capacity Manual 2000*. *Highway Capacity Manual 2000* represents the latest research on capacity and quality of service for transportation facilities.

Quality of service requires quantitative measures to characterize operational conditions within a traffic stream. Level of service is a quality measure describing operational conditions within a traffic stream, generally in terms of such service measures as speed and travel time, freedom to maneuver, traffic interruptions, and comfort and convenience.

Six levels of service are defined for each type of facility that has analysis procedures available. Letters designate each level, from A to F, with level-of-service A representing the best operating conditions and level-of-service F the worst. Each level of service represents a range of operating conditions and the driver's perception of these conditions. Safety is not included in the measures that establish service levels.

A general description of service levels for various types of facilities is shown in Table A-I.

Table A-I

Level of Service Description

Facility Type	**Uninterrupted Flow**	**Interrupted Flow**
	Freeways Multi-lane Highways Two-lane Highways Urban Streets	Signalized Intersections Unsignalized Intersections Two-way Stop Control All-way Stop Control
LOS		
A	Free-flow	Very low delay.
B	Stable flow. Presence of other users noticeable.	Low delay.
C	Stable flow. Comfort and convenience starts to decline.	Acceptable delay.
D	High density stable flow.	Tolerable delay.
E	Unstable flow.	Limit of acceptable delay.
F	Forced or breakdown flow.	Unacceptable delay

Source: *Highway Capacity Manual 2000*

Urban Streets

The term "urban streets" refers to urban arterials and collectors, including those in downtown areas.

Arterial streets are roads that primarily serve longer through trips. However, providing access to abutting commercial and residential land uses is also an important function of arterials.

Collector streets provide both land access and traffic circulation within residential, commercial and industrial areas. Their access function is more important than that of arterials, and unlike arterials their operation is not always dominated by traffic signals.

Downtown streets are signalized facilities that often resemble arterials. They not only move through traffic but also provide access to local businesses for passenger cars, transit buses, and trucks. Pedestrian conflicts and lane obstructions created by stopping or standing buses, trucks and parking vehicles that cause turbulence in the traffic flow are typical of downtown streets.

The speed of vehicles on urban streets is influenced by three main factors, street environment, interaction among vehicles and traffic control. As a result, these factors also affect quality of service.

The street environment includes the geometric characteristics of the facility, the character of roadside activity and adjacent land uses. Thus, the environment reflects the number and width of lanes, type of median, driveway density, spacing between signalized intersections, existence of parking, level of pedestrian activity and speed limit.

The interaction among vehicles is determined by traffic density, the proportion of trucks and buses, and turning movements. This interaction affects the operation of vehicles at intersections and, to a lesser extent, between signals.

Traffic control (including signals and signs) forces a portion of all vehicles to slow or stop. The delays and speed changes caused by traffic control devices reduce vehicle speeds, however, such controls are needed to establish right-of-way.

The average travel speed for through vehicles along an urban street is the determinant of the operating level of service. The travel speed along a segment, section or entire length of an urban street is dependent on the running speed between signalized intersections and the amount of control delay incurred at signalized intersections.

Level-of-service A describes primarily free-flow operations. Vehicles are completely unimpeded in their ability to maneuver within the traffic stream. Control delay at signalized intersections is minimal.

Level-of-service B describes reasonably unimpeded operations. The ability to maneuver within the traffic stream is only slightly restricted, and control delays at signalized intersections are not significant.

Level-of-service C describes stable operations, however, ability to maneuver and change lanes in midblock location may be more restricted than at level-of-service B. Longer queues, adverse signal coordination, or both may contribute to lower travel speeds.

Level-of-service D borders on a range in which in which small increases in flow may cause substantial increases in delay and decreases in travel speed. Level-of-service D may be due to adverse signal progression, inappropriate signal timing, high volumes, or a combination of these factors.

Level-of-service E is characterized by significant delays and lower travel speeds. Such operations are caused by a combination of adverse progression, high signal density, high volumes, extensive delays at critical intersections, and inappropriate signal timing.

Level-of-service F is characterized by urban street flow at extremely low speeds. Intersection congestion is likely at critical signalized locations, with high delays, high volumes, and extensive queuing.

The methodology to determine level of service stratifies urban streets into four classifications. The classifications are complex, and are related to functional and design categories. Table A-II describes the functional and design categories, while Table A-III relates these to the urban street classification.

Once classified, the urban street is divided into segments for analysis. An urban street segment is a one-way section of street encompassing a series of blocks or links terminating at a signalized intersection. Adjacent segments of urban streets may be combined to form larger street sections, provided that the segments have similar demand flows and characteristics.

Levels of service are related to the average travel speed of vehicles along the urban street segment or section.

Travel times for existing conditions are obtained by field measurements. The maximum-car technique is used. The vehicle is driven at the posted speed limit unless impeded by actual traffic conditions. In the maximum-car technique, a safe level of vehicular operation is maintained by observing proper following distances and by changing speeds at reasonable rates of acceleration and deceleration. The maximum-car technique provides the best base for measuring traffic performance.

An observer records the travel time and locations and duration of delay. The beginning and ending points are the centers of intersections. Delays include times waiting in queues at signalized intersections. The travel speed is determined by dividing the length of the segment by the travel time. Once the travel speed on the arterial is determined, the level of service is found by comparing the speed to the criteria in Table A-IV. Level-of-service criteria vary for the different classifications of urban street, reflecting differences in driver expectations.

Table A-II

Functional and Design Categories for Urban Streets

Criterion	Functional Category	
	Principal Arterial	**Minor Arterial**
Mobility function	Very important	Important
Access function	Very minor	Substantial
Points connected	Freeways, important activity centers, major traffic generators	Principal arterials
Predominant trips served	Relatively long trips between major points and through trips entering, leaving, and passing through city	Trips of moderate length within relatively small geographical areas

Criterion	Design Category			
	High-Speed	**Suburban**	**Intermediate**	**Urban**
Driveway access density	Very low density	Low density	Moderate density	High density
Arterial type	Multilane divided; undivided or two-lane with shoulders	Multilane divided: undivided or two-lane with shoulders	Multilane divided or undivided; one way, two lane	Undivided one way; two way, two or more lanes
Parking	No	No	Some	Usually
Separate left-turn lanes	Yes	Yes	Usually	Some
Signals per mile	0.5 to 2	1 to 5	4 to 10	6 to 12
Speed limits	45 to 55 mph	40 to 45 mph	30 to 40 mph	25 to 35 mph
Pedestrian activity	Very little	Little	Some	Usually
Roadside development	Low density	Low to medium density	Medium to moderate density	High density

Source: *Highway Capacity Manual 2000*

Table A-III

Urban Street Class based on Function and Design Categories

Design Category	Functional Category	
	Principal Arterial	**Minor Arterial**
High-Speed	I	Not applicable
Suburban	II	II
Intermediate	II	III or IV
Urban	III or IV	IV

Source: *Highway Capacity Manual 2000*

Table A-IV

Urban Street Levels of Service by Class

Urban Street Class	**I**	**II**	**III**	**IV**
Range of Free Flow Speeds (mph)	45 to 55	35 to 45	30 to 35	25 to 35
Typical Free Flow Speed (mph)	50	40	33	30
Level of Service	**Average Travel Speed (mph)**			
A	>42	>35	>30	>25
B	>34	>28	>24	>19
C	>27	>22	>18	>13
D	>21	>17	>14	>9
E	>16	>13	>10	>7
F	≤16	≤13	≤10	≤7

Source: *Highway Capacity Manual 2000*

Interrupted Flow

One of the more important elements limiting, and often interrupting the flow of traffic on a highway is the intersection. Flow on an interrupted facility is usually dominated by points of fixed operation such as traffic signals, stop and yield signs. These all operate quite differently and have differing impacts on overall flow.

Signalized Intersections

The capacity of a highway is related primarily to the geometric characteristics of the facility, as well as to the composition of the traffic stream on the facility. Geometrics are a fixed, or non-varying, characteristic of a facility.

At the signalized intersection, an additional element is introduced into the concept of capacity: time allocation. A traffic signal essentially allocates time among conflicting traffic movements seeking use of the same physical space. The way in which time is allocated has a significant impact on the operation of the intersection and on the capacity of the intersection and its approaches.

Level of service for signalized intersections is defined in terms of control delay, which is a measure of driver discomfort, frustration, fuel consumption, and increased travel time. The delay experienced by a motorist is made up of a number of factors that relate to control, traffic and incidents. Total delay is the difference between the travel time actually experienced and the reference travel time that would result during base conditions, *i. e.,* in the absence of traffic control, geometric delay, any incidents, and any other vehicles. Specifically, level of service criteria for traffic signals are stated in terms of average control delay per vehicle, typically for a 15-minute analysis period. Delay is a complex measure and depends on a number of variables, including the quality of progression, the cycle length, the ratio of green time to cycle length and the volume to capacity ratio for the lane group.

For each intersection analyzed the average control delay per vehicle per approach is determined for the peak hour. A weighted average of control delay per vehicle is then determined for the intersection. A level of service designation is given to the control delay to better describe the level of operation. A

description of levels of service for signalized intersections can be found in Table A-V.

Table A-V

Description of Level of Service for Signalized Intersections

Level of Service	Description
A	Very low control delay, up to 10 seconds per vehicle. Progression is extremely favorable, and most vehicles arrive during the green phase. Many vehicles do not stop at all. Short cycle lengths may tend to contribute to low delay values.
B	Control delay greater than 10 and up to 20 seconds per vehicle. There is good progression or short cycle lengths or both. More vehicles stop causing higher levels of delay.
C	Control delay greater than 20 and up to 35 seconds per vehicle. Higher delays are caused by fair progression or longer cycle lengths or both. Individual cycle failures may begin to appear. Cycle failure occurs when a given green phase doe not serve queued vehicles, and overflow occurs. The number of vehicles stopping is significant, though many still pass through the intersection without stopping.
D	Control delay greater than 35 and up to 55 seconds per vehicle. The influence of congestions becomes more noticeable. Longer delays may result from some combination of unfavorable progression, long cycle lengths, or high volumes. Many vehicles stop, the proportion of vehicles not stopping declines. Individual cycle failures are noticeable.
E	Control delay greater than 55 and up to 80 seconds per vehicle. The limit of acceptable delay. High delays usually indicate poor progression, long cycle lengths, and high volumes. Individual cycle failures are frequent.
F	Control delay in excess of 80 seconds per vehicle. Unacceptable to most drivers. Oversaturation, arrival flow rates exceed the capacity of the intersection. Many individual cycle failures. Poor progression and long cycle lengths may also be contributing factors to higher delay.

Source: *Highway Capacity Manual 2000*

The use of control delay, which may also be referred to as signal delay, was introduced in the 1997 update to the *Highway Capacity Manual*, and represents a departure from previous updates. In the third edition, published in 1985 and the 1994 update to the third edition, delay only included stopped delay. Thus, the level of service criteria listed in Table A-V differs from earlier criteria.

Unsignalized Intersections

The current procedures on unsignalized intersections were first introduced in the 1997 update to the *Highway Capacity Manual* and represent a revision of the methodology published in the 1994 update to the 1985 *Highway Capacity Manual*. The revised procedures use control delay as a measure of effectiveness to determine level of service. Delay is a measure of driver discomfort, frustration, fuel consumption, and increased travel time. The delay experienced by a motorist is made up of a number of factors that relate to control, traffic and incidents. Total delay is the difference between the travel time actually experienced and the reference travel time that would result during base conditions, *i. e.,* in the absence of traffic control, geometric delay, any incidents, and any other vehicles. Control delay is the increased time of travel for a vehicle approaching and passing through an unsignalized intersection, compared with a free-flow vehicle if it were not required to slow or stop at the intersection.

Two-Way Stop Controlled Intersections

Two-way stop controlled intersections in which stop signs are used to assign the right-of-way, are the most prevalent type of intersection in the United States. At two-way stop-controlled intersections the stop-controlled approaches are referred as the minor street approaches and can be either public streets or private driveways. The approaches that are not controlled by stop signs are referred to as the major street approaches.

The capacity of movements subject to delay are determined using the "critical gap" method of capacity analysis. Expected average control delay based on movement volume and movement capacity is calculated. A level of service designation is given to the expected control delay for each minor movement. Level of service is not defined for the intersection as a whole. Control delay is the increased time of travel for a vehicle approaching and passing through a stop-controlled intersection, compared with a free-flow vehicle if it were not required to slow or stop at the intersection. A description of levels of service for two-way stop-controlled intersections is found in Table A-VI.

Table A-VI

Description of Level of Service for Two-Way Stop Controlled Intersections

Level of Service	Description
A	Very low control delay less than 10 seconds per vehicle for each movement subject to delay.
B	Low control delay greater than 10 and up to 15 seconds per vehicle for each movement subject to delay.
C	Acceptable control delay greater than 15 and up to 25 seconds per vehicle for each movement subject to delay.
D	Tolerable control delay greater than 25 and up to 35 seconds per vehicle for each movement subject to delay.
E	Limit of tolerable control delay greater than 35 and up to 50 seconds per vehicle for each movement subject to delay.
F	Unacceptable control delay in excess of 50 seconds per vehicle for each movement subject to delay.

Source: *Highway Capacity Manual 2000*

Appendix F-2 - Turning Movement Counts and Traffic Signal Timing Sheets

B.A.Y.M.E.T.R.I.C.S.

INTERSECTION TURNING MOVEMENT SUMMARY

PROJECT:	**JUVENILE JUSTICE CENTER TRAFFIC COUNTS**	**SURVEY DATE:**	**7/14/2015**	**DAY:**	**TUESDAY**
N-S APPROACH:	**150TH AVENUE**	**SURVEY TIME:**	**7:00 AM**	**TO**	**9:00 AM**
E-W APPROACH:	**I-580EB OFF-RAMP - FREEDOM AVENUE**	**JURISDICTION:**	**ALAMEDA COUNTY**	**FILE:**	**3507085-1AM**

PEAK HOUR
7:45 AM to 8:45 AM

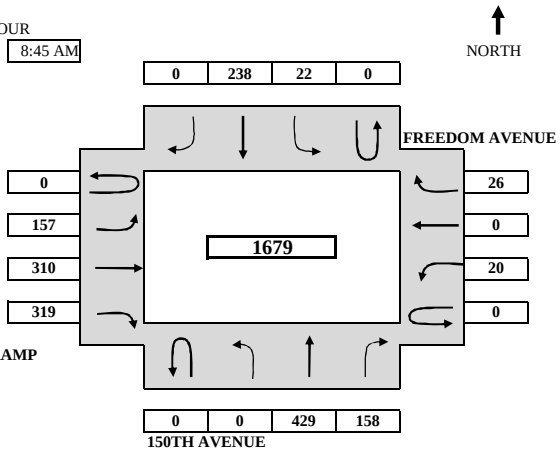

ARRIVAL / DEPARTURE VOLUMES

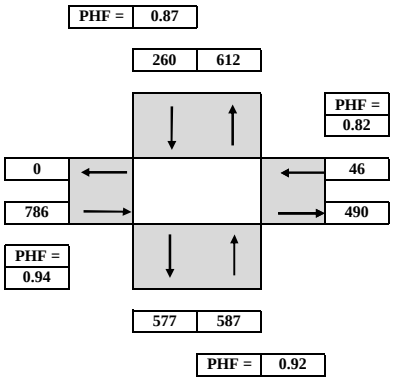

TIME From	TO	NORTHBOUND U-TURN	LEFT	THRU	RIGHT	SOUTHBOUND U-TURN	LEFT	THRU	RIGHT	EASTBOUND U-TURN	LEFT	THRU	RIGHT	WESTBOUND U-TURN	LEFT	THRU	RIGHT	TOTAL
SURVEY DATA																		
7:00 AM	7:15 AM			131	48		10	34			18	50	62		0		11	**364**
7:15 AM	7:30 AM			242	78		15	69			37	95	102		5		18	**661**
7:30 AM	7:45 AM			343	111		28	115			68	187	159		9		24	**1044**
7:45 AM	8:00 AM			446	139		30	173			106	262	234		14		29	**1433**
8:00 AM	8:15 AM			570	174		34	233			142	326	313		21		36	**1849**
8:15 AM	8:30 AM			680	213		44	284			186	413	392		23		45	**2280**
8:30 AM	8:45 AM			772	269		50	353			225	497	478		29		50	**2723**
8:45 AM	9:00 AM			838	300		57	407			255	573	560		32		56	**3078**
TOTAL BY PERIOD																		
7:00 AM	7:15 AM	0	0	131	48	0	10	34	0	0	18	50	62	0	0	0	11	**364**
7:15 AM	7:30 AM	0	0	111	30	0	5	35	0	0	19	45	40	0	5	0	7	**297**
7:30 AM	7:45 AM	0	0	101	33	0	13	46	0	0	31	92	57	0	4	0	6	**383**
7:45 AM	8:00 AM	0	0	103	28	0	2	58	0	0	38	75	75	0	5	0	5	**389**
8:00 AM	8:15 AM	0	0	124	35	0	4	60	0	0	36	64	79	0	7	0	7	**416**
8:15 AM	8:30 AM	0	0	110	39	0	10	51	0	0	44	87	79	0	2	0	9	**431**
8:30 AM	8:45 AM	0	0	92	56	0	6	69	0	0	39	84	86	0	6	0	5	**443**
8:45 AM	9:00 AM	0	0	66	31	0	7	54	0	0	30	76	82	0	3	0	6	**355**
HOURLY TOTALS																		
7:00 AM	8:00 AM	0	0	446	139	0	30	173	0	0	106	262	234	0	14	0	29	**1433**
7:15 AM	8:15 AM	0	0	439	126	0	24	199	0	0	124	276	251	0	21	0	25	**1485**
7:30 AM	8:30 AM	0	0	438	135	0	29	215	0	0	149	318	290	0	18	0	27	**1619**
7:45 AM	8:45 AM	0	0	429	158	0	22	238	0	0	157	310	319	0	20	0	26	**1679**
8:00 AM	9:00 AM	0	0	392	161	0	27	234	0	0	149	311	326	0	18	0	27	**1645**

PEAK HOUR SUMMARY

7:45 AM to 8:45 AM	NORTHBOUND NBU	NBL	NBT	NBR	SOUTHBOUND SBU	SBL	SBT	SBR	EASTBOUND EBU	EBL	EBT	EBR	WESTBOUND WBU	WBL	WBT	WBR	TOTAL
VOLUME	0	0	429	158	0	22	238	0	0	157	310	319	0	20	0	26	**1679**
PHF BY MOVEMENT	0.00	0.00	0.86	0.71	0.00	0.55	0.86	0.00	0.00	0.89	0.89	0.93	0.00	0.71	0.00	0.72	OVERALL
PHF BY APPROACH	0.92				0.87				0.94				0.82				**0.95**
BICYCLE (by Direction)	0				3				0				0				**3**
PED (by Direction) *	0				3				0				0				**3**
	NORTH-END				SOUTH-END				EAST-END				WEST-END				
PED (by Leg) *	0				0				3				0				**3**

TEL: (510) 232 - 1271 FAX: (510) 232 - 1272

* Included Jay-Walk

B.A.Y.M.E.T.R.I.C.S.

PEDESTRIAN & BICYCLE MOVEMENT SUMMARY

PROJECT:	JUVENILE JUSTICE CENTER TRAFFIC COUNTS	**SURVEY DATE:**	7/14/2015	**DAY:**	TUESDAY
N-S APPROACH:	150TH AVENUE	**SURVEY PERIOD:**	7:00 AM	to	9:00 AM
E-W APPROACH:	I-580EB OFF-RAMP - FREEDOM AVENUE	**JURISDICTION:**	ALAMEDA COUNTY	**FILE:**	3507085-1AM

PEAK HOUR SUMMARY

PEAK HOUR 07:45 AM TO 08:45 AM

PEDESTRIAN | **BICYCLE**

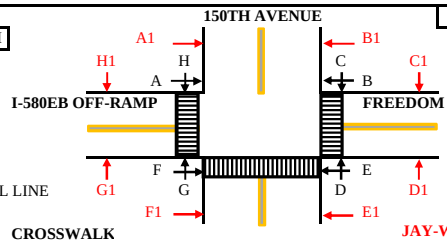

LEGEND:
- CROSSWALK
- SIDEWALK
- STOP CONTROL LINE

CROSSWALK / **JAY-WALK (in RED)**

A	B	BY LEG	BY DIR	BY DIR	BY LEG	A1	B1
		N-END	NB(D+G)	NB(D1+G1)	N-END		
0	0	0	0	0	0	0	0
C	D	E-END	SB(C+H)	SB(C1+H1)	E-END	C1	D1
3	0	3	3	0	0	0	0
E	F	S-END	EB(A+F)	EB(A1+F1)	S-END	E1	F1
0	0	0	0	0	0	0	0
G	H	W-END	WB(B+E)	WB(B1+E1)	W-END	G1	H1
0	0	0	0	0	0	0	0

TOTAL PEDESTIAN 3 — **TOTAL JAY-WALK** 0

TOTAL PEDESTIAN (Incldded JAY-WALK) 3

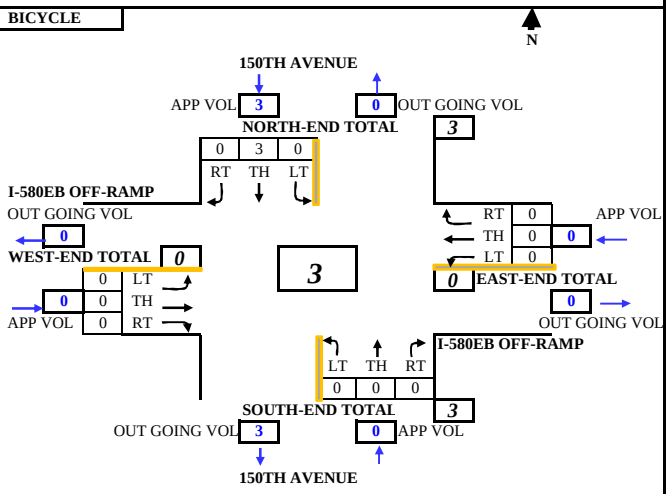

SURVEY DATA

TIME From	To	PEDESTRIAN @ CROSSWALK / STOP LINE N-END A	B	E-END C	D	S-END E	F	W-END G	H	TOTAL	JAY-WALK (From Intersection to Midblock) N-END A1	B1	E-END C1	D1	S-END E1	F1	W-END G1	H1	TOTAL	BICYCLE NB SOUTH-END LT	TH	RT	SB NORTH-END LT	TH	RT	EB WEST-END LT	TH	RT	WB EAST-END LT	TH	RT	TOTAL	OVER ALL TOTAL
07:00 AM	07:15 AM	0	0	1	0	0	0	0	0		0	0	0	0	0	0	0	0		0	0	0	0	0	0	0	0	0	0	0	0		1
07:15 AM	07:30 AM	0	0	2	0	0	0	0	1		0	0	0	0	0	0	0	0		0	0	0	0	1	0	0	0	0	0	0	0		4
07:30 AM	07:45 AM	0	0	2	1	0	0	0	1		0	0	0	0	0	0	0	0		0	0	0	0	1	0	0	0	0	0	0	0		5
07:45 AM	08:00 AM	0	0	5	1	0	0	0	1		0	0	0	0	0	0	0	0		0	0	0	0	1	0	0	0	0	0	0	0		8
08:00 AM	08:15 AM	0	0	5	1	0	0	0	1		0	0	0	0	0	0	0	0		0	0	0	0	4	0	0	0	0	0	0	0		11
08:15 AM	08:30 AM	0	0	5	1	0	0	0	1		0	0	0	0	0	0	0	0		0	0	0	0	4	0	0	0	0	0	0	0		11
08:30 AM	08:45 AM	0	0	5	1	0	0	0	1		0	0	0	0	0	0	0	0		0	0	0	0	4	0	0	0	0	0	0	0		11
08:45 AM	09:00 AM	0	0	6	1	0	0	0	1		0	0	0	0	0	0	0	0		0	0	0	0	5	0	0	0	0	0	0	0		13
TOTAL BY PERIOD																																		
07:00 AM	07:15 AM	0	0	1	0	0	0	0	0	1	0	0	0	0	0	0	0	0	0	0	0	0	0	0	0	0	0	0	0	0	0	0	1	1
07:15 AM	07:30 AM	0	0	1	0	0	0	0	1	2	0	0	0	0	0	0	0	0	0	0	0	0	0	1	0	0	0	0	0	0	0	1	3	3
07:30 AM	07:45 AM	0	0	0	1	0	0	0	0	1	0	0	0	0	0	0	0	0	0	0	0	0	0	0	0	0	0	0	0	0	0	0	1	1
07:45 AM	08:00 AM	0	0	3	0	0	0	0	0	3	0	0	0	0	0	0	0	0	0	0	0	0	0	0	0	0	0	0	0	0	0	0	3	3
08:00 AM	08:15 AM	0	0	0	0	0	0	0	0	0	0	0	0	0	0	0	0	0	0	0	0	0	0	3	0	0	0	0	0	0	0	3	3	3
08:15 AM	08:30 AM	0	0	0	0	0	0	0	0	0	0	0	0	0	0	0	0	0	0	0	0	0	0	0	0	0	0	0	0	0	0	0	0	0
08:30 AM	08:45 AM	0	0	0	0	0	0	0	0	0	0	0	0	0	0	0	0	0	0	0	0	0	0	0	0	0	0	0	0	0	0	0	0	0
08:45 AM	09:00 AM	0	0	1	0	0	0	0	0	1	0	0	0	0	0	0	0	0	0	0	0	0	0	1	0	0	0	0	0	0	0	1	2	2
HOURLY TOTALS																																		
07:00 AM	08:00 AM	0	0	5	1	0	0	0	1	7	0	0	0	0	0	0	0	0	0	0	0	0	0	1	0	0	0	0	0	0	0	1	8	8
07:15 AM	08:15 AM	0	0	4	1	0	0	0	1	6	0	0	0	0	0	0	0	0	0	0	0	0	0	4	0	0	0	0	0	0	0	4	10	10
07:30 AM	08:30 AM	0	0	3	1	0	0	0	0	4	0	0	0	0	0	0	0	0	0	0	0	0	0	3	0	0	0	0	0	0	0	3	7	7
07:45 AM	08:45 AM	0	0	3	0	0	0	0	0	3	0	0	0	0	0	0	0	0	0	0	0	0	0	3	0	0	0	0	0	0	0	3	6	6
08:00 AM	09:00 AM	0	0	1	0	0	0	0	0	1	0	0	0	0	0	0	0	0	0	0	0	0	0	4	0	0	0	0	0	0	0	4	5	5

SUMMARY (HOURLY COUNT)

TIME From	To	PEDESTRIAN COUNTS BY LEG* N-END	S-END	E-END	W-END	TOTAL	PEDESTRIAN COUNTS BY DIRECTION* NB	SB	EB	WB	TOTAL	BICYCLE COUNTS NB	SB	EB	WB	TOTAL
07:00 AM	08:00 AM	0	0	6	1	7	1	6	0	0	7	0	1	0	0	1
07:15 AM	08:15 AM	0	0	5	1	6	1	5	0	0	6	0	4	0	0	4
07:30 AM	08:30 AM	0	0	4	0	4	1	3	0	0	4	0	3	0	0	3
07:45 AM	08:45 AM	0	0	3	0	3	0	3	0	0	3	0	3	0	0	3
08:00 AM	09:00 AM	0	0	1	0	1	0	1	0	0	1	0	4	0	0	4

Tel : (510) 232-1271 *Fax: (510) 232-1272*

* Included Jay-Walk

B.A.Y.M.E.T.R.I.C.S.

INTERSECTION TURNING MOVEMENT SUMMARY

PROJECT:	**JUVENILE JUSTICE CENTER TRAFFIC COUNTS**	**SURVEY DATE:**	**7/14/2015**	**DAY:**	**TUESDAY**
N-S APPROACH:	**150TH AVENUE**	**SURVEY TIME:**	**4:00 PM**	**TO**	**6:00 PM**
E-W APPROACH:	**I-580EB OFF-RAMP - FREEDOM AVENUE**	**JURISDICTION:**	**ALAMEDA COUNTY**	**FILE:**	**3507085-1PM**

PEAK HOUR

4:45 PM to 5:45 PM

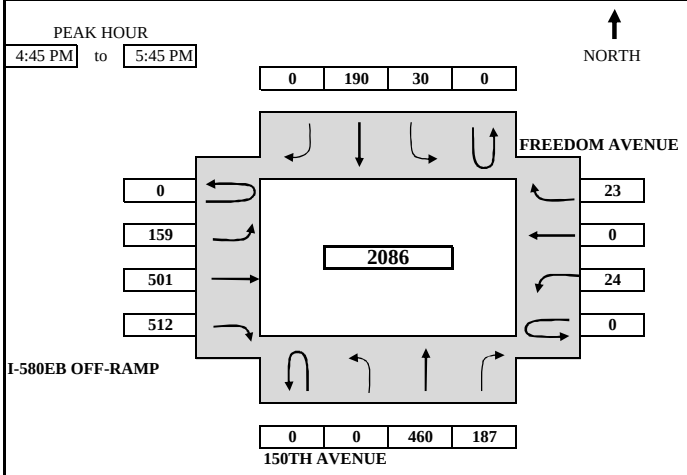

ARRIVAL / DEPARTURE VOLUMES

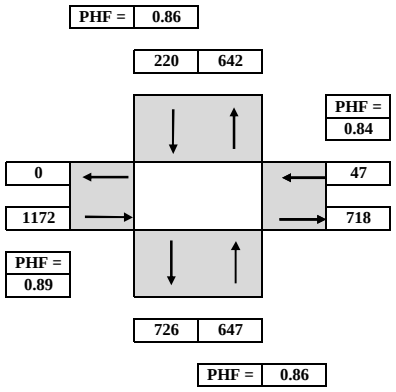

TIME PERIOD From	To	NORTHBOUND U-TURN	LEFT	THRU	RIGHT	SOUTHBOUND U-TURN	LEFT	THRU	RIGHT	EASTBOUND U-TURN	LEFT	THRU	RIGHT	WESTBOUND U-TURN	LEFT	THRU	RIGHT	TOTAL
SURVEY DATA																		
4:00 PM	4:15 PM			123	42		4	39			38	133	127		4		11	**521**
4:15 PM	4:30 PM			265	105		9	87			79	265	246		9		22	**1087**
4:30 PM	4:45 PM			369	146		13	133			107	364	366		15		28	**1541**
4:45 PM	5:00 PM			479	195		26	175			154	508	482		20		32	**2071**
5:00 PM	5:15 PM			579	248		29	218			190	612	592		24		39	**2531**
5:15 PM	5:30 PM			719	296		32	270			242	746	735		31		45	**3116**
5:30 PM	5:45 PM			829	333		43	323			266	865	878		39		51	**3627**
5:45 PM	6:00 PM			929	390		51	380			301	977	972		45		56	**4101**
TOTAL BY PERIOD																		
4:00 PM	4:15 PM	0	0	123	42	0	4	39	0	0	38	133	127	0	4	0	11	**521**
4:15 PM	4:30 PM	0	0	142	63	0	5	48	0	0	41	132	119	0	5	0	11	**566**
4:30 PM	4:45 PM	0	0	104	41	0	4	46	0	0	28	99	120	0	6	0	6	**454**
4:45 PM	5:00 PM	0	0	110	49	0	13	42	0	0	47	144	116	0	5	0	4	**530**
5:00 PM	5:15 PM	0	0	100	53	0	3	43	0	0	36	104	110	0	4	0	7	**460**
5:15 PM	5:30 PM	0	0	140	48	0	3	52	0	0	52	134	143	0	7	0	6	**585**
5:30 PM	5:45 PM	0	0	110	37	0	11	53	0	0	24	119	143	0	8	0	6	**511**
5:45 PM	6:00 PM	0	0	100	57	0	8	57	0	0	35	112	94	0	6	0	5	**474**
HOURLY TOTALS																		
4:00 PM	5:00 PM	0	0	479	195	0	26	175	0	0	154	508	482	0	20	0	32	**2071**
4:15 PM	5:15 PM	0	0	456	206	0	25	179	0	0	152	479	465	0	20	0	28	**2010**
4:30 PM	5:30 PM	0	0	454	191	0	23	183	0	0	163	481	489	0	22	0	23	**2029**
4:45 PM	5:45 PM	0	0	460	187	0	30	190	0	0	159	501	512	0	24	0	23	**2086**
5:00 PM	6:00 PM	0	0	450	195	0	25	205	0	0	147	469	490	0	25	0	24	**2030**

PEAK HOUR SUMMARY

4:45 PM to 5:45 PM	NORTHBOUND NBU	NBL	NBT	NBR	SOUTHBOUND SBU	SBL	SBT	SBR	EASTBOUND EBU	EBL	EBT	EBR	WESTBOUND WBU	WBL	WBT	WBR	TOTAL
VOLUME	0	0	460	187	0	30	190	0	0	159	501	512	0	24	0	23	**2086**
PHF BY MOVEMENT	0.00	0.00	0.82	0.88	0.00	0.58	0.90	0.00	0.00	0.76	0.87	0.90	0.00	0.75	0.00	0.82	OVERALL
PHF BY APPROACH	0.86				0.86				0.89				0.84				**0.89**
BICYCLE (by Direction)	4				0				0				0				**4**
PED (by Direction) *	14				4				1				1				**20**
	NORTH-END				SOUTH-END				EAST-END				WEST-END				
PED (by Leg) *	0				2				8				10				**20**

TEL: (510) 232 - 1271 FAX: (510) 232 - 1272

* Included Jay-Walk

B.A.Y.M.E.T.R.I.C.S.

PEDESTRIAN & BICYCLE MOVEMENT SUMMARY

PROJECT:	**JUVENILE JUSTICE CENTER TRAFFIC COUNTS**	**SURVEY DATE:**	**7/14/2015**	**DAY:**	**TUESDAY**
N-S APPROACH:	**150TH AVENUE**	**SURVEY PERIOD**	**4:00 PM**	**to**	**6:00 PM**
E-W APPROACH:	**I-580EB OFF-RAMP - FREEDOM AVENUE**	**JURISDICTION:**	**ALAMEDA COUNTY**	**FILE:**	**=S6**

PEAK HOUR SUMMARY

PEAK HOUR: 04:45 PM TO 05:45 PM

PEDESTRIAN | **BICYCLE**

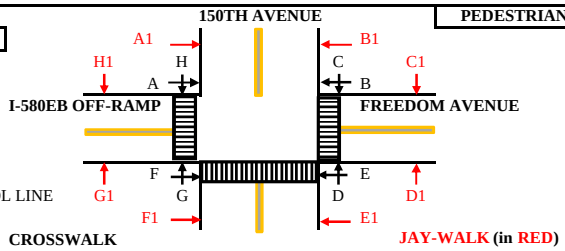

CROSSWALK — **JAY-WALK (in RED)**

A	B	BY LEG N-END	BY DIR NB(D+G)	BY DIR NB(D1+G1)	BY LEG N-END	A1	B1
0	0	**0**	**14**	**0**	**0**	0	0
C	D	E-END	SB(C+H)	SB(C1+H1)	E-END	C1	D1
1	7	**8**	**4**	**0**	**0**	0	0
E	F	S-END	EB(A+F)	EB(A1+F1)	S-END	E1	F1
1	1	**2**	**1**	**0**	**0**	0	0
G	H	W-END	WB(B+E)	WB(B1+E1)	W-END	G1	H1
7	3	**10**	**1**	**0**	**0**	0	0

TOTAL PEDESTIAN 20 — **TOTAL JAY-WALK** 0

TOTAL PEDESTIAN (Inclded JAY-WALK) 20

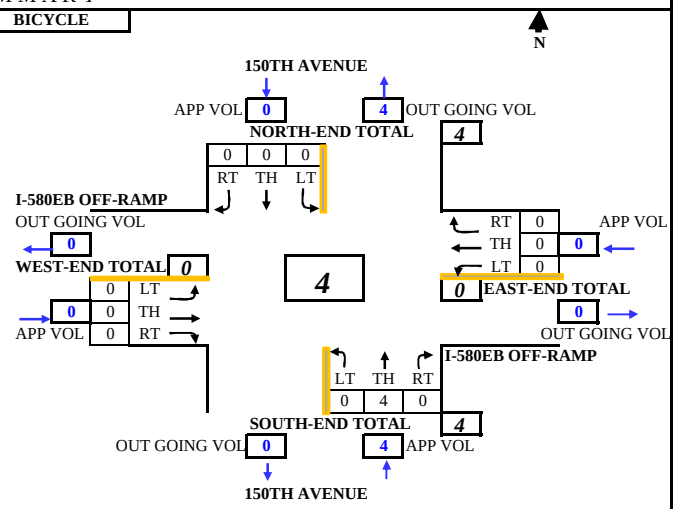

TIME From	To	PEDESTRIAN @ CROSSWALK / STOP LINE N-END A	N-END B	E-END C	E-END D	S-END E	S-END F	W-END G	W-END H	TOTAL	PEDESTRIAN JAY-WALK (From Intersection to Midblock) N-END A1	N-END B1	E-END C1	E-END D1	S-END E1	S-END F1	W-END G1	W-END H1	TOTAL	BICYCLE NB SOUTH-END LT	NB TH	NB RT	SB NORTH-END LT	SB TH	SB RT	EB WEST-END LT	EB TH	EB RT	WB EAST-END LT	WB TH	WB RT	TOTAL	OVER ALL TOTAL
SURVEY DATA																																	
04:00 PM	04:15 PM	0	0	1	1	0	0	0	1		0	0	0	0	0	0	0	0		0	0	0	0	0	0	0	0	0	0	0	0		3
04:15 PM	04:30 PM	0	0	1	2	0	1	0	1		0	0	0	0	0	0	0	0		0	0	0	0	0	0	0	0	0	0	0	0		5
04:30 PM	04:45 PM	0	0	1	3	0	1	0	1		0	0	0	0	0	0	0	0		0	0	0	0	0	0	0	0	0	0	0	0		6
04:45 PM	05:00 PM	0	0	1	4	0	1	7	1		0	0	0	0	0	0	0	0		0	0	0	0	0	0	0	0	0	0	0	0		14
05:00 PM	05:15 PM	0	0	2	6	0	1	7	2		0	0	0	0	0	0	0	0		0	1	0	0	0	0	0	0	0	0	0	0		19
05:15 PM	05:30 PM	0	0	2	8	0	1	7	3		0	0	0	0	0	0	0	0		0	4	0	0	0	0	0	0	0	0	0	0		25
05:30 PM	05:45 PM	0	0	2	10	1	2	7	4		0	0	0	0	0	0	0	0		0	4	0	0	0	0	0	0	0	0	0	0		30
05:45 PM	06:00 PM	0	0	4	13	2	2	7	4		0	0	0	0	0	0	0	0		0	4	0	0	0	0	0	0	0	0	0	0		36
TOTAL BY PERIOD																																	
04:00 PM	04:15 PM	0	0	1	1	0	0	0	1	3	0	0	0	0	0	0	0	0	0	0	0	0	0	0	0	0	0	0	0	0	0	0	3
04:15 PM	04:30 PM	0	0	0	1	0	1	0	0	2	0	0	0	0	0	0	0	0	0	0	0	0	0	0	0	0	0	0	0	0	0	0	2
04:30 PM	04:45 PM	0	0	0	1	0	0	0	0	1	0	0	0	0	0	0	0	0	0	0	0	0	0	0	0	0	0	0	0	0	0	0	1
04:45 PM	05:00 PM	0	0	0	1	0	0	7	0	8	0	0	0	0	0	0	0	0	0	0	0	0	0	0	0	0	0	0	0	0	0	0	8
05:00 PM	05:15 PM	0	0	1	2	0	0	0	1	4	0	0	0	0	0	0	0	0	0	0	1	0	0	0	0	0	0	0	0	0	0	1	5
05:15 PM	05:30 PM	0	0	0	2	0	0	0	1	3	0	0	0	0	0	0	0	0	0	0	3	0	0	0	0	0	0	0	0	0	0	3	6
05:30 PM	05:45 PM	0	0	0	2	1	1	0	1	5	0	0	0	0	0	0	0	0	0	0	0	0	0	0	0	0	0	0	0	0	0	0	5
05:45 PM	06:00 PM	0	0	2	3	1	0	0	0	6	0	0	0	0	0	0	0	0	0	0	0	0	0	0	0	0	0	0	0	0	0	0	6
HOURLY TOTALS																																	
04:00 PM	05:00 PM	0	0	1	4	0	1	7	1	14	0	0	0	0	0	0	0	0	0	0	0	0	0	0	0	0	0	0	0	0	0	0	14
04:15 PM	05:15 PM	0	0	1	5	0	1	7	1	15	0	0	0	0	0	0	0	0	0	0	1	0	0	0	0	0	0	0	0	0	0	1	16
04:30 PM	05:30 PM	0	0	1	6	0	0	7	2	16	0	0	0	0	0	0	0	0	0	0	4	0	0	0	0	0	0	0	0	0	0	4	20
04:45 PM	05:45 PM	0	0	1	7	1	1	7	3	20	0	0	0	0	0	0	0	0	0	0	4	0	0	0	0	0	0	0	0	0	0	4	24
05:00 PM	06:00 PM	0	0	3	9	2	1	0	3	18	0	0	0	0	0	0	0	0	0	0	4	0	0	0	0	0	0	0	0	0	0	4	22

SUMMARY (HOURLY COUNT)

TIME From	To	PEDESTRIAN COUNTS BY LEG* N-END	S-END	E-END	W-END	TOTAL	PEDESTRIAN COUNTS BY DIRECTION* NB	SB	EB	WB	TOTAL	BICYCLE COUNTS NB	SB	EB	WB	TOTAL
04:00 PM	05:00 PM	0	1	5	8	**14**	11	2	1	0	***14***	0	0	0	0	***0***
04:15 PM	05:15 PM	0	1	6	8	**15**	12	2	1	0	***15***	1	0	0	0	***1***
04:30 PM	05:30 PM	0	0	7	9	**16**	13	3	0	0	***16***	4	0	0	0	***4***
04:45 PM	05:45 PM	0	2	8	10	**20**	14	4	1	1	***20***	4	0	0	0	***4***
05:00 PM	06:00 PM	0	3	12	3	**18**	9	6	1	2	***18***	4	0	0	0	***4***

Tel : (510) 232-1271 ***Fax: (510) 232-1272***

* Included Jay-Walk

B.A.Y.M.E.T.R.I.C.S.

INTERSECTION TURNING MOVEMENT SUMMARY

PROJECT:	**JUVENILE JUSTICE CENTER TRAFFIC COUNTS**	**SURVEY DATE:**	**7/14/2015**	**DAY:**	**TUESDAY**
N-S APPROACH:	**150TH AVENUE**	**SURVEY TIME:**	**7:00 AM**	**TO**	**9:00 AM**
E-W APPROACH:	**I-580WB ON-RAMP - FOOTHILL BLVD**	**JURISDICTION:**	**ALAMEDA COUNTY**	**FILE:**	**3507085-2AM**

PEAK HOUR
7:15 AM to 8:15 AM

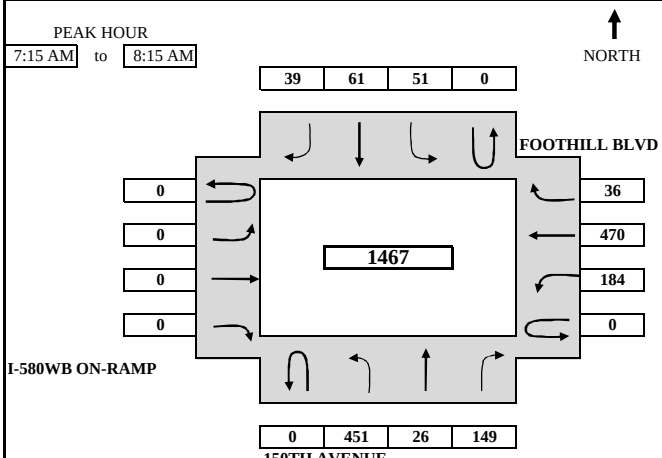

ARRIVAL / DEPARTURE VOLUMES

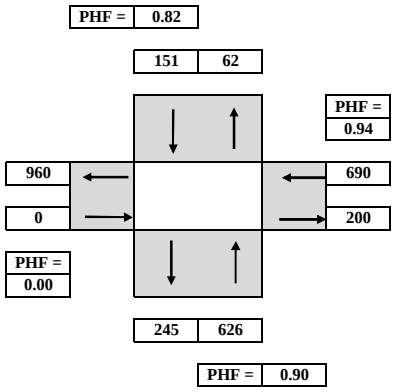

TIME From	PERIOD To	NORTHBOUND U-TURN	NORTHBOUND LEFT	NORTHBOUND THRU	NORTHBOUND RIGHT	SOUTHBOUND U-TURN	SOUTHBOUND LEFT	SOUTHBOUND THRU	SOUTHBOUND RIGHT	EASTBOUND U-TURN	EASTBOUND LEFT	EASTBOUND THRU	EASTBOUND RIGHT	WESTBOUND U-TURN	WESTBOUND LEFT	WESTBOUND THRU	WESTBOUND RIGHT	TOTAL
SURVEY DATA																		
7:00 AM	7:15 AM		119	3	17		19	20	11						17	96	5	**307**
7:15 AM	7:30 AM		244	7	41		28	30	30						50	220	13	**663**
7:30 AM	7:45 AM		348	13	68		42	53	39						95	346	19	**1023**
7:45 AM	8:00 AM		451	20	120		58	66	46						148	450	27	**1386**
8:00 AM	8:15 AM		570	29	166		70	81	50						201	566	41	**1774**
8:15 AM	8:30 AM		673	36	205		77	101	57						236	678	48	**2111**
8:30 AM	8:45 AM		747	46	257		88	118	63						287	795	55	**2456**
8:45 AM	9:00 AM		805	54	297		95	133	72						339	875	62	**2732**
TOTAL BY PERIOD																		
7:00 AM	7:15 AM	0	119	3	17	0	19	20	11	0	0	0	0	0	17	96	5	**307**
7:15 AM	7:30 AM	0	125	4	24	0	9	10	19	0	0	0	0	0	33	124	8	**356**
7:30 AM	7:45 AM	0	104	6	27	0	14	23	9	0	0	0	0	0	45	126	6	**360**
7:45 AM	8:00 AM	0	103	7	52	0	16	13	7	0	0	0	0	0	53	104	8	**363**
8:00 AM	8:15 AM	0	119	9	46	0	12	15	4	0	0	0	0	0	53	116	14	**388**
8:15 AM	8:30 AM	0	103	7	39	0	7	20	7	0	0	0	0	0	35	112	7	**337**
8:30 AM	8:45 AM	0	74	10	52	0	11	17	6	0	0	0	0	0	51	117	7	**345**
8:45 AM	9:00 AM	0	58	8	40	0	7	15	9	0	0	0	0	0	52	80	7	**276**
HOURLY TOTALS																		
7:00 AM	8:00 AM	0	451	20	120	0	58	66	46	0	0	0	0	0	148	450	27	**1386**
7:15 AM	8:15 AM	0	451	26	149	0	51	61	39	0	0	0	0	0	184	470	36	**1467**
7:30 AM	8:30 AM	0	429	29	164	0	49	71	27	0	0	0	0	0	186	458	35	**1448**
7:45 AM	8:45 AM	0	399	33	189	0	46	65	24	0	0	0	0	0	192	449	36	**1433**
8:00 AM	9:00 AM	0	354	34	177	0	37	67	26	0	0	0	0	0	191	425	35	**1346**

PEAK HOUR SUMMARY

7:15 AM to 8:15 AM	NORTHBOUND NBU	NBL	NBT	NBR	SOUTHBOUND SBU	SBL	SBT	SBR	EASTBOUND EBU	EBL	EBT	EBR	WESTBOUND WBU	WBL	WBT	WBR	TOTAL
VOLUME	0	451	26	149	0	51	61	39	0	0	0	0	0	184	470	36	**1467**
PHF BY MOVEMENT	0.00	0.90	0.72	0.72	0.00	0.80	0.66	0.51	0.00	0.00	0.00	0.00	0.00	0.87	0.93	0.64	OVERALL
PHF BY APPROACH	0.90				0.82				0.00				0.94				**0.95**
BICYCLE (by Direction)	1				4				0				1				**6**
PED (by Direction) *	1				7				0				0				**8**
	NORTH-END				SOUTH-END				EAST-END				WEST-END				
PED (by Leg) *	0				0				8				0				**8**

TEL: (510) 232 - 1271 FAX: (510) 232 - 1272

* Included Jay-Walk

B.A.Y.M.E.T.R.I.C.S.

PEDESTRIAN & BICYCLE MOVEMENT SUMMARY

PROJECT:	**JUVENILE JUSTICE CENTER TRAFFIC COUNTS**	**SURVEY DATE:**	**7/14/2015**	**DAY:**	**TUESDAY**
N-S APPROACH:	**150TH AVENUE**	**SURVEY PERIOD**	**7:00 AM**	**to**	**9:00 AM**
E-W APPROACH:	**I-580WB ON-RAMP - FOOTHILL BLVD**	**JURISDICTION:**	**ALAMEDA COUNTY**	**FILE:**	**3507085-2AM**

PEAK HOUR SUMMARY

PEAK HOUR 07:15 AM TO 08:15 AM

PEDESTRIAN | **BICYCLE**

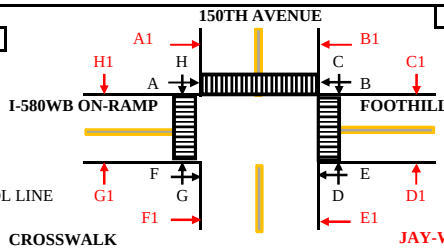

LEGEND:
- CROSSWALK
- SIDEWALK
- STOP CONTROL LINE

CROSSWALK — **JAY-WALK (in RED)**

A	B	BY LEG N-END	BY DIR NB(D+G)	BY DIR NB(D1+G1)	BY LEG N-END	A1	B1
0	0	**0**	**1**	**0**	**0**	0	0
C	D	E-END	SB(C+H)	SB(C1+H1)	E-END	C1	D1
7	1	**8**	**7**	**0**	**0**	0	0
E	F	S-END	EB(A+F)	EB(A1+F1)	S-END	E1	F1
0	0	**0**	**0**	**0**	**0**	0	0
G	H	W-END	WB(B+E)	WB(B1+E1)	W-END	G1	H1
0	0	**0**	**0**	**0**	**0**	0	0

TOTAL PEDESTRIAN 8 — **TOTAL JAY-WALK** 0

TOTAL PEDESTRIAN (Incldded JAY-WALK) *8*

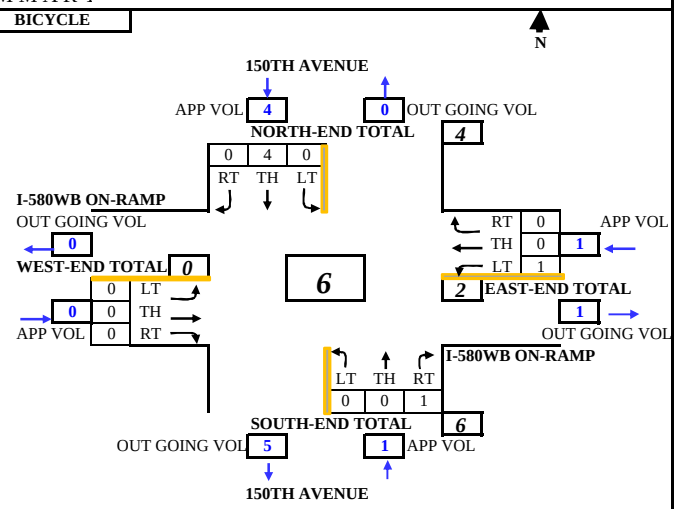

SURVEY DATA

TIME From	To	PEDESTRIAN @ CROSSWALK / STOP LINE N-END A	B	E-END C	D	S-END E	F	W-END G	H	TOTAL	JAY-WALK (From Intersection to Midblock) N-END A1	B1	E-END C1	D1	S-END E1	F1	W-END G1	H1	TOTAL	BICYCLE NB SOUTH-END LT	TH	RT	SB NORTH-END LT	TH	RT	EB WEST-END LT	TH	RT	WB EAST-END LT	TH	RT	TOTAL	OVER ALL TOTAL
07:00 AM	07:15 AM	0	0	0	0	0	0	0	0		0	0	0	0	0	0	0	0		0	0	0	2	0	0	0	0	0	0	0	0		*2*
07:15 AM	07:30 AM	0	0	1	0	0	0	0	0		0	0	0	0	0	0	0	0		0	0	0	2	0	0	0	0	0	1	0	0		*4*
07:30 AM	07:45 AM	0	0	2	0	0	0	0	0		0	0	0	0	0	0	0	0		0	0	1	2	1	0	0	0	0	1	0	0		*7*
07:45 AM	08:00 AM	0	0	7	1	0	0	0	0		0	0	0	0	0	0	0	0		0	0	1	2	1	0	0	0	0	1	0	0		*13*
08:00 AM	08:15 AM	0	0	7	1	0	0	0	0		0	0	0	0	0	0	0	0		0	0	1	2	4	0	0	0	0	1	0	0		*16*
08:15 AM	08:30 AM	0	0	9	1	0	0	0	0		0	0	0	0	0	0	0	0		0	0	1	2	4	0	0	0	0	1	0	0		*18*
08:30 AM	08:45 AM	0	0	9	3	0	0	0	0		0	0	0	0	0	0	0	0		0	0	1	2	4	0	0	0	0	1	0	0		*20*
08:45 AM	09:00 AM	0	0	10	3	0	0	0	0		0	0	0	0	0	0	0	0		0	0	1	2	4	0	0	0	0	2	0	0		*22*

TOTAL BY PERIOD

TIME From	To	N-END A	B	E-END C	D	S-END E	F	W-END G	H	TOTAL	N-END A1	B1	E-END C1	D1	S-END E1	F1	W-END G1	H1	TOTAL	NB LT	TH	RT	SB LT	TH	RT	EB LT	TH	RT	WB LT	TH	RT	TOTAL	OVER ALL TOTAL
07:00 AM	07:15 AM	0	0	0	0	0	0	0	0	0	0	0	0	0	0	0	0	0	0	0	0	0	2	0	0	0	0	0	0	0	0	2	*2*
07:15 AM	07:30 AM	0	0	1	0	0	0	0	0	1	0	0	0	0	0	0	0	0	0	0	0	0	0	0	0	0	0	0	1	0	0	1	*2*
07:30 AM	07:45 AM	0	0	1	0	0	0	0	0	1	0	0	0	0	0	0	0	0	0	0	0	1	0	1	0	0	0	0	0	0	0	2	*3*
07:45 AM	08:00 AM	0	0	5	1	0	0	0	0	6	0	0	0	0	0	0	0	0	0	0	0	0	0	0	0	0	0	0	0	0	0	0	*6*
08:00 AM	08:15 AM	0	0	0	0	0	0	0	0	0	0	0	0	0	0	0	0	0	0	0	0	0	0	3	0	0	0	0	0	0	0	3	*3*
08:15 AM	08:30 AM	0	0	2	0	0	0	0	0	2	0	0	0	0	0	0	0	0	0	0	0	0	0	0	0	0	0	0	0	0	0	0	*2*
08:30 AM	08:45 AM	0	0	0	2	0	0	0	0	2	0	0	0	0	0	0	0	0	0	0	0	0	0	0	0	0	0	0	0	0	0	0	*2*
08:45 AM	09:00 AM	0	0	1	0	0	0	0	0	1	0	0	0	0	0	0	0	0	0	0	0	0	0	0	0	0	0	0	1	0	0	1	***2***

HOURLY TOTALS

TIME From	To	N-END A	B	E-END C	D	S-END E	F	W-END G	H	TOTAL	N-END A1	B1	E-END C1	D1	S-END E1	F1	W-END G1	H1	TOTAL	NB LT	TH	RT	SB LT	TH	RT	EB LT	TH	RT	WB LT	TH	RT	TOTAL	OVER ALL TOTAL
07:00 AM	08:00 AM	0	0	7	1	0	0	0	0	8	0	0	0	0	0	0	0	0	0	0	0	1	2	1	0	0	0	0	1	0	0	5	***13***
07:15 AM	08:15 AM	0	0	7	1	0	0	0	0	8	0	0	0	0	0	0	0	0	0	0	0	1	0	4	0	0	0	0	1	0	0	6	***14***
07:30 AM	08:30 AM	0	0	8	1	0	0	0	0	9	0	0	0	0	0	0	0	0	0	0	0	1	0	4	0	0	0	0	0	0	0	5	***14***
07:45 AM	08:45 AM	0	0	7	3	0	0	0	0	10	0	0	0	0	0	0	0	0	0	0	0	0	0	3	0	0	0	0	0	0	0	3	***13***
08:00 AM	09:00 AM	0	0	3	2	0	0	0	0	5	0	0	0	0	0	0	0	0	0	0	0	0	0	3	0	0	0	0	1	0	0	4	***9***

SUMMARY (HOURLY COUNT)

TIME From	To	PEDESTRIAN COUNTS BY LEG* N-END	S-END	E-END	W-END	TOTAL	PEDESTRIAN COUNTS BY DIRECTION* NB	SB	EB	WB	TOTAL	BICYCLE COUNTS NB	SB	EB	WB	TOTAL
07:00 AM	08:00 AM	0	0	8	0	**8**	1	7	0	0	***8***	1	3	0	1	***5***
07:15 AM	08:15 AM	0	0	8	0	**8**	1	7	0	0	***8***	1	4	0	1	***6***
07:30 AM	08:30 AM	0	0	9	0	**9**	1	8	0	0	***9***	1	4	0	0	***5***
07:45 AM	08:45 AM	0	0	10	0	**10**	3	7	0	0	***10***	0	3	0	0	***3***
08:00 AM	09:00 AM	0	0	5	0	**5**	2	3	0	0	***5***	0	3	0	1	***4***

Tel : (510) 232-1271 ***Fax: (510) 232-1272***

* Included Jay-Walk

B.A.Y.M.E.T.R.I.C.S.

INTERSECTION TURNING MOVEMENT SUMMARY

PROJECT:	**JUVENILE JUSTICE CENTER TRAFFIC COUNTS**	**SURVEY DATE:**	**7/14/2015**	**DAY:**	**TUESDAY**
N-S APPROACH:	**150TH AVENUE**	**SURVEY TIME:**	**4:00 PM**	**TO**	**6:00 PM**
E-W APPROACH:	**I-580WB ON-RAMP - FOOTHILL BLVD**	**JURISDICTION:**	**ALAMEDA COUNTY**	**FILE:**	**3507085-2PM**

PEAK HOUR
4:30 PM to 5:30 PM

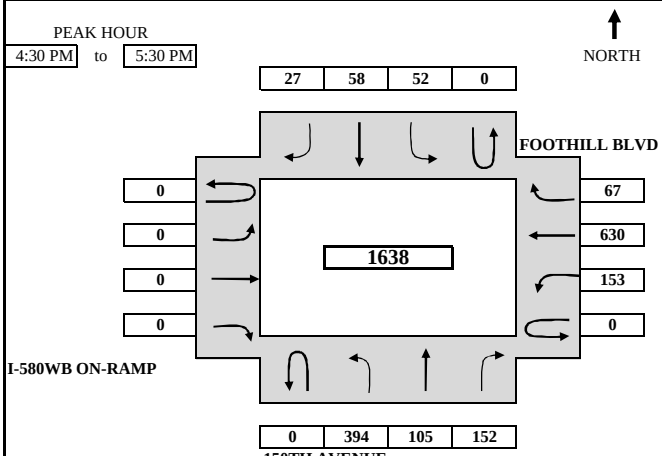

ARRIVAL / DEPARTURE VOLUMES

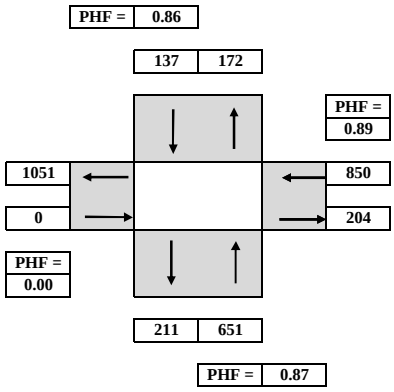

TIME PERIOD From	To	NORTHBOUND U-TURN	LEFT	THRU	RIGHT	SOUTHBOUND U-TURN	LEFT	THRU	RIGHT	EASTBOUND U-TURN	LEFT	THRU	RIGHT	WESTBOUND U-TURN	LEFT	THRU	RIGHT	TOTAL
SURVEY DATA																		
4:00 PM	4:15 PM		110	21	32		2	11	14						33	131	16	**370**
4:15 PM	4:30 PM		218	50	61		12	24	20						73	254	32	**744**
4:30 PM	4:45 PM		315	76	89		24	37	26						116	439	44	**1166**
4:45 PM	5:00 PM		405	97	126		30	52	31						148	579	68	**1536**
5:00 PM	5:15 PM		500	127	166		49	65	39						188	723	85	**1942**
5:15 PM	5:30 PM		612	155	213		64	82	47						226	884	99	**2382**
5:30 PM	5:45 PM		725	173	250		70	102	50						271	995	113	**2749**
5:45 PM	6:00 PM		809	194	297		84	113	55						328	1130	136	**3146**
TOTAL BY PERIOD																		
4:00 PM	4:15 PM	0	110	21	32	0	2	11	14	0	0	0	0	0	33	131	16	**370**
4:15 PM	4:30 PM	0	108	29	29	0	10	13	6	0	0	0	0	0	40	123	16	**374**
4:30 PM	4:45 PM	0	97	26	28	0	12	13	6	0	0	0	0	0	43	185	12	**422**
4:45 PM	5:00 PM	0	90	21	37	0	6	15	5	0	0	0	0	0	32	140	24	**370**
5:00 PM	5:15 PM	0	95	30	40	0	19	13	8	0	0	0	0	0	40	144	17	**406**
5:15 PM	5:30 PM	0	112	28	47	0	15	17	8	0	0	0	0	0	38	161	14	**440**
5:30 PM	5:45 PM	0	113	18	37	0	6	20	3	0	0	0	0	0	45	111	14	**367**
5:45 PM	6:00 PM	0	84	21	47	0	14	11	5	0	0	0	0	0	57	135	23	**397**
HOURLY TOTALS																		
4:00 PM	5:00 PM	0	405	97	126	0	30	52	31	0	0	0	0	0	148	579	68	**1536**
4:15 PM	5:15 PM	0	390	106	134	0	47	54	25	0	0	0	0	0	155	592	69	**1572**
4:30 PM	5:30 PM	0	394	105	152	0	52	58	27	0	0	0	0	0	153	630	67	**1638**
4:45 PM	5:45 PM	0	410	97	161	0	46	65	24	0	0	0	0	0	155	556	69	**1583**
5:00 PM	6:00 PM	0	404	97	171	0	54	61	24	0	0	0	0	0	180	551	68	**1610**

PEAK HOUR SUMMARY

4:30 PM to 5:30 PM	NORTHBOUND NBU	NBL	NBT	NBR	SOUTHBOUND SBU	SBL	SBT	SBR	EASTBOUND EBU	EBL	EBT	EBR	WESTBOUND WBU	WBL	WBT	WBR	TOTAL
VOLUME	0	394	105	152	0	52	58	27	0	0	0	0	0	153	630	67	**1638**
PHF BY MOVEMENT	0.00	0.88	0.88	0.81	0.00	0.68	0.85	0.84	0.00	0.00	0.00	0.00	0.00	0.89	0.85	0.70	OVERALL
PHF BY APPROACH	0.87				0.86				0.00				0.89				**0.93**
BICYCLE (by Direction)	4				0				0				0				**4**
PED (by Direction) *	14				1				0				1				**16**
	NORTH-END				SOUTH-END				EAST-END				WEST-END				
PED (by Leg) *	1				0				6				9				**16**

TEL: (510) 232 - 1271 FAX: (510) 232 - 1272

* Included Jay-Walk

B.A.Y.M.E.T.R.I.C.S.

PEDESTRIAN & BICYCLE MOVEMENT SUMMARY

PROJECT:	**JUVENILE JUSTICE CENTER TRAFFIC COUNTS**	**SURVEY DATE:**	**7/14/2015**	**DAY:**	**TUESDAY**
N-S APPROACH:	**150TH AVENUE**	**SURVEY PERIOD**	**4:00 PM**	**to**	**6:00 PM**
E-W APPROACH:	**I-580WB ON-RAMP - FOOTHILL BLVD**	**JURISDICTION:**	**ALAMEDA COUNTY**	**FILE:**	**=S6**

PEAK HOUR SUMMARY

PEAK HOUR 04:30 PM TO 05:30 PM

PEDESTRIAN | **BICYCLE**

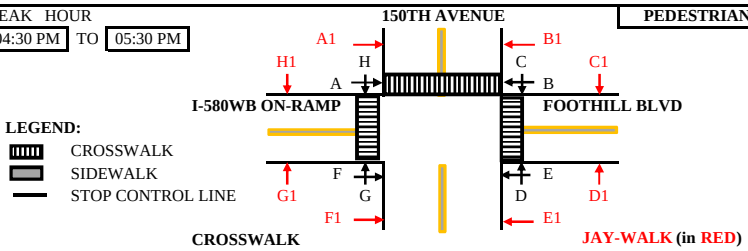

CROSSWALK — **JAY-WALK (in RED)**

A	B	BY LEG N-END	BY DIR NB(D+G)	BY DIR NB(D1+G1)	BY LEG N-END	A1	B1
0	0	**0**	**14**	**0**	**1**	0	1
C	D	E-END	SB(C+H)	SB(C1+H1)	E-END	C1	D1
0	6	**6**	**1**	**0**	**0**	0	0
E	F	S-END	EB(A+F)	EB(A1+F1)	S-END	E1	F1
0	0	**0**	**0**	**0**	**0**	0	0
G	H	W-END	WB(B+E)	WB(B1+E1)	W-END	G1	H1
8	1	**9**	**0**	**1**	**0**	0	0

TOTAL PEDESTRIAN **15** — **TOTAL JAY-WALK** **1**

TOTAL PEDESTRIAN (Incided JAY-WALK) ***16***

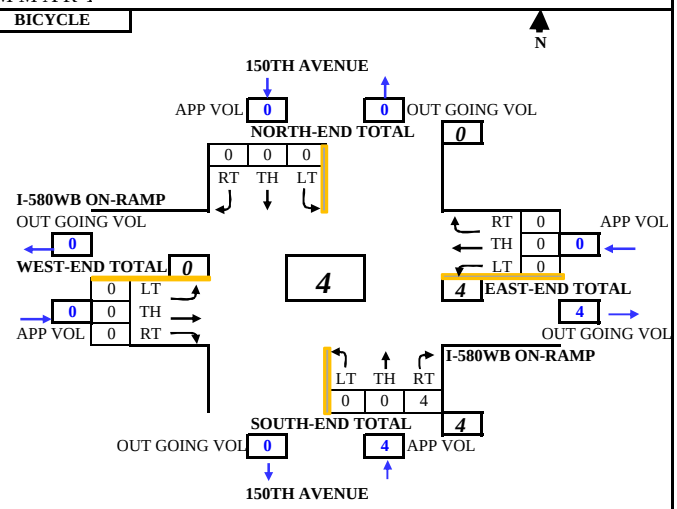

SURVEY DATA

TIME From	To	PEDESTRIAN @ CROSSWALK / STOP LINE N-END A	B	E-END C	D	S-END E	F	W-END G	H	TOTAL	JAY-WALK (From Intersection to Midblock) N-END A1	B1	E-END C1	D1	S-END E1	F1	W-END G1	H1	TOTAL	BICYCLE NB SOUTH-END LT	TH	RT	SB NORTH-END LT	TH	RT	EB WEST-END LT	TH	RT	WB EAST-END LT	TH	RT	TOTAL	OVER ALL TOTAL
04:00 PM	04:15 PM	0	0	1	0	0	0	0	0		0	0	0	0	0	0	0	0		0	0	0	0	0	0	0	0	0	0	0	0			*1*
04:15 PM	04:30 PM	0	0	1	2	0	0	0	1		0	0	0	0	0	0	0	0		0	0	0	0	0	0	0	0	0	0	0	0			*4*
04:30 PM	04:45 PM	0	0	1	3	0	0	0	1		0	1	0	0	0	0	0	0		0	0	0	0	0	0	0	0	0	0	0	0			*6*
04:45 PM	05:00 PM	0	0	1	4	0	0	0	1		0	1	0	0	0	0	0	0		0	0	0	0	0	0	0	0	0	0	0	0			*7*
05:00 PM	05:15 PM	0	0	1	4	0	0	8	1		0	1	0	0	0	0	0	0		0	0	0	0	0	0	0	0	0	0	0	0			*15*
05:15 PM	05:30 PM	0	0	1	8	0	0	8	2		0	1	0	0	0	0	0	0		0	0	4	0	0	0	0	0	0	0	0	0			*24*
05:30 PM	05:45 PM	0	0	1	9	0	0	8	3		0	1	0	0	0	0	0	0		0	0	4	0	0	0	0	0	0	0	0	0			*26*
05:45 PM	06:00 PM	0	0	3	12	0	0	8	3		0	2	0	0	0	0	0	0		0	0	4	0	0	0	0	0	0	1	0	1			*34*

TOTAL BY PERIOD

TIME From	To	A	B	C	D	E	F	G	H	TOTAL	A1	B1	C1	D1	E1	F1	G1	H1	TOTAL	NB LT	TH	RT	SB LT	TH	RT	EB LT	TH	RT	WB LT	TH	RT	TOTAL	OVER ALL TOTAL
04:00 PM	04:15 PM	0	0	1	0	0	0	0	0	1	0	0	0	0	0	0	0	0	0	0	0	0	0	0	0	0	0	0	0	0	0	0	*1*
04:15 PM	04:30 PM	0	0	0	2	0	0	0	1	3	0	0	0	0	0	0	0	0	0	0	0	0	0	0	0	0	0	0	0	0	0	0	*3*
04:30 PM	04:45 PM	0	0	0	1	0	0	0	0	1	0	1	0	0	0	0	0	0	1	0	0	0	0	0	0	0	0	0	0	0	0	0	*2*
04:45 PM	05:00 PM	0	0	0	1	0	0	0	0	1	0	0	0	0	0	0	0	0	0	0	0	0	0	0	0	0	0	0	0	0	0	0	*1*
05:00 PM	05:15 PM	0	0	0	0	0	0	8	0	8	0	0	0	0	0	0	0	0	0	0	0	0	0	0	0	0	0	0	0	0	0	0	*8*
05:15 PM	05:30 PM	0	0	0	4	0	0	0	1	5	0	0	0	0	0	0	0	0	0	0	0	4	0	0	0	0	0	0	0	0	0	4	*9*
05:30 PM	05:45 PM	0	0	0	1	0	0	0	1	2	0	0	0	0	0	0	0	0	0	0	0	0	0	0	0	0	0	0	0	0	0	0	*2*
05:45 PM	06:00 PM	0	0	2	3	0	0	0	0	5	0	1	0	0	0	0	0	0	1	0	0	0	0	0	0	0	0	0	1	0	1	2	***8***

HOURLY TOTALS

TIME From	To	A	B	C	D	E	F	G	H	TOTAL	A1	B1	C1	D1	E1	F1	G1	H1	TOTAL	NB LT	TH	RT	SB LT	TH	RT	EB LT	TH	RT	WB LT	TH	RT	TOTAL	OVER ALL TOTAL
04:00 PM	05:00 PM	0	0	1	4	0	0	0	1	6	0	1	0	0	0	0	0	0	1	0	0	0	0	0	0	0	0	0	0	0	0	0	***7***
04:15 PM	05:15 PM	0	0	0	4	0	0	8	1	13	0	1	0	0	0	0	0	0	1	0	0	0	0	0	0	0	0	0	0	0	0	0	***14***
04:30 PM	05:30 PM	0	0	0	6	0	0	8	1	15	0	1	0	0	0	0	0	0	1	0	0	4	0	0	0	0	0	0	0	0	0	4	***20***
04:45 PM	05:45 PM	0	0	0	6	0	0	8	2	16	0	0	0	0	0	0	0	0	0	0	0	4	0	0	0	0	0	0	0	0	0	4	***20***
05:00 PM	06:00 PM	0	0	2	8	0	0	8	2	20	0	1	0	0	0	0	0	0	1	0	0	4	0	0	0	0	0	0	1	0	1	6	***27***

SUMMARY (HOURLY COUNT)

TIME From	To	PEDESTRIAN COUNTS BY LEG* N-END	S-END	E-END	W-END	TOTAL	PEDESTRIAN COUNTS BY DIRECTION* NB	SB	EB	WB	TOTAL	BICYCLE COUNTS NB	SB	EB	WB	TOTAL
04:00 PM	05:00 PM	1	0	5	1	**7**	4	2	0	1	***7***	0	0	0	0	***0***
04:15 PM	05:15 PM	1	0	4	9	**14**	12	1	0	1	***14***	0	0	0	0	***0***
04:30 PM	05:30 PM	1	0	6	9	**16**	14	1	0	1	***16***	4	0	0	0	***4***
04:45 PM	05:45 PM	0	0	6	10	**16**	14	2	0	0	***16***	4	0	0	0	***4***
05:00 PM	06:00 PM	1	0	10	10	**21**	16	4	0	1	***21***	4	0	0	2	***6***

Tel : (510) 232-1271 ***Fax: (510) 232-1272***

* Included Jay-Walk

B.A.Y.M.E.T.R.I.C.S.

INTERSECTION TURNING MOVEMENT SUMMARY

PROJECT:	**JUVENILE JUSTICE CENTER TRAFFIC COUNTS**	**SURVEY DATE:**	**7/14/2015**	**DAY:**	**TUESDAY**
N-S APPROACH:	**FAIRMONT DRIVE**	**SURVEY TIME:**	**7:00 AM**	**TO**	**9:00 AM**
E-W APPROACH:	**I-580EB ON-RAMP - FREEDOM AVENUE**	**JURISDICTION:**	**ALAMEDA COUNTY**	**FILE:**	**3507085-3AM**

PEAK HOUR

7:30 AM to 8:30 AM

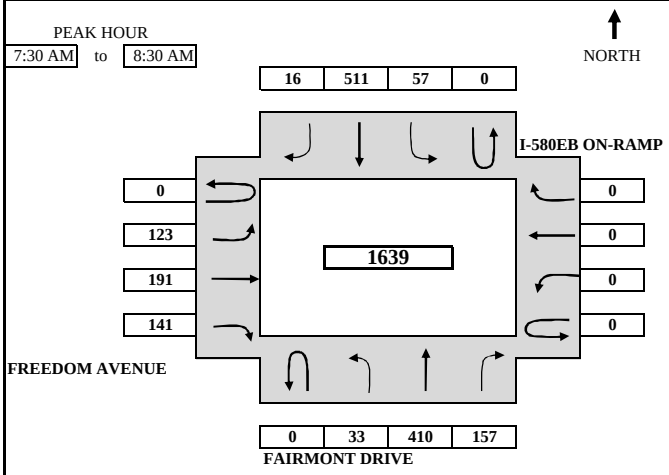

ARRIVAL / DEPARTURE VOLUMES

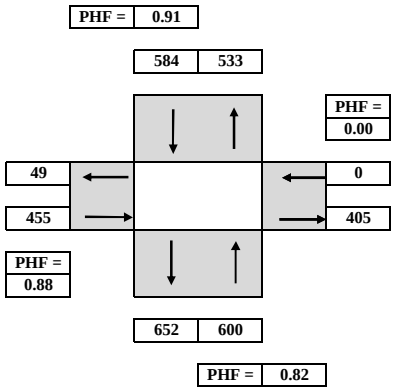

TIME From		PERIOD To	NORTHBOUND U-TURN	NORTHBOUND LEFT	NORTHBOUND THRU	NORTHBOUND RIGHT	SOUTHBOUND U-TURN	SOUTHBOUND LEFT	SOUTHBOUND THRU	SOUTHBOUND RIGHT	EASTBOUND U-TURN	EASTBOUND LEFT	EASTBOUND THRU	EASTBOUND RIGHT	WESTBOUND U-TURN	WESTBOUND LEFT	WESTBOUND THRU	WESTBOUND RIGHT	TOTAL
SURVEY DATA																			
7:00 AM	to	7:15 AM	1	4	73	44		15	95	5		16	44	25					**322**
7:15 AM	to	7:30 AM	1	13	155	78		25	177	11		46	80	59					**645**
7:30 AM	to	7:45 AM	1	20	254	119		44	315	14		67	146	101					**1081**
7:45 AM	to	8:00 AM	1	28	355	161		56	445	17		109	184	139					**1495**
8:00 AM	to	8:15 AM	1	36	494	197		66	562	24		138	225	178					**1921**
8:15 AM	to	8:30 AM	1	46	565	235		82	688	27		169	271	200					**2284**
8:30 AM	to	8:45 AM	1	47	647	281		95	811	37		201	319	252					**2691**
8:45 AM	to	9:00 AM	1	50	732	316		112	929	44		230	354	300					**3068**
TOTAL BY PERIOD																			
7:00 AM	to	7:15 AM	1	4	73	44	0	15	95	5	0	16	44	25	0	0	0	0	**322**
7:15 AM	to	7:30 AM	0	9	82	34	0	10	82	6	0	30	36	34	0	0	0	0	**323**
7:30 AM	to	7:45 AM	0	7	99	41	0	19	138	3	0	21	66	42	0	0	0	0	**436**
7:45 AM	to	8:00 AM	0	8	101	42	0	12	130	3	0	42	38	38	0	0	0	0	**414**
8:00 AM	to	8:15 AM	0	8	139	36	0	10	117	7	0	29	41	39	0	0	0	0	**426**
8:15 AM	to	8:30 AM	0	10	71	38	0	16	126	3	0	31	46	22	0	0	0	0	**363**
8:30 AM	to	8:45 AM	0	1	82	46	0	13	123	10	0	32	48	52	0	0	0	0	**407**
8:45 AM	to	9:00 AM	0	3	85	35	0	17	118	7	0	29	35	48	0	0	0	0	**377**
HOURLY TOTALS																			
7:00 AM	to	8:00 AM	1	28	355	161	0	56	445	17	0	109	184	139	0	0	0	0	**1495**
7:15 AM	to	8:15 AM	0	32	421	153	0	51	467	19	0	122	181	153	0	0	0	0	**1599**
7:30 AM	to	8:30 AM	0	33	410	157	0	57	511	16	0	123	191	141	0	0	0	0	**1639**
7:45 AM	to	8:45 AM	0	27	393	162	0	51	496	23	0	134	173	151	0	0	0	0	**1610**
8:00 AM	to	9:00 AM	0	22	377	155	0	56	484	27	0	121	170	161	0	0	0	0	**1573**

PEAK HOUR SUMMARY

7:30 AM to 8:30 AM	NORTHBOUND NBU	NBL	NBT	NBR	SOUTHBOUND SBU	SBL	SBT	SBR	EASTBOUND EBU	EBL	EBT	EBR	WESTBOUND WBU	WBL	WBT	WBR	TOTAL
VOLUME	0	33	410	157	0	57	511	16	0	123	191	141	0	0	0	0	**1639**
PHF BY MOVEMENT	0.00	0.83	0.74	0.93	0.00	0.75	0.93	0.57	0.00	0.73	0.72	0.84	0.00	0.00	0.00	0.00	OVERALL
PHF BY APPROACH	0.82				0.91				0.88				0.00				**0.94**
BICYCLE (by Direction)	1				1				0				0				**2**
PED (by Direction) *	5				5				1				1				**12**
	NORTH-END				SOUTH-END				EAST-END				WEST-END				
PED (by Leg) *	0				2				7				3				**12**

TEL: (510) 232 - 1271 FAX: (510) 232 - 1272

* Included Jay-Walk

B.A.Y.M.E.T.R.I.C.S.

PEDESTRIAN & BICYCLE MOVEMENT SUMMARY

PROJECT:	**JUVENILE JUSTICE CENTER TRAFFIC COUNTS**	**SURVEY DATE:**	**7/14/2015**	**DAY:**	**TUESDAY**
N-S APPROACH:	**FAIRMONT DRIVE**	**SURVEY PERIOD**	**7:00 AM**	**to**	**9:00 AM**
E-W APPROACH:	**I-580EB ON-RAMP - FREEDOM AVENUE**	**JURISDICTION:**	**ALAMEDA COUNTY**	**FILE:**	**3507085-3AM**

PEAK HOUR SUMMARY

PEAK HOUR: 07:30 AM TO 08:30 AM

PEDESTRIAN | **BICYCLE**

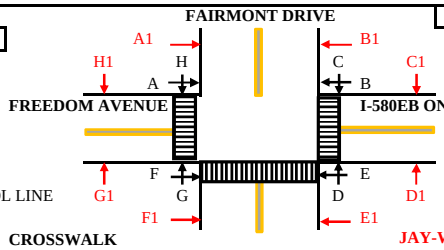

LEGEND:
- CROSSWALK
- SIDEWALK
- STOP CONTROL LINE

CROSSWALK — **JAY-WALK (in RED)**

A	B	BY LEG N-END	BY DIR NB(D+G)	BY DIR NB(D1+G1)	BY LEG N-END	A1	B1
0	0	0	5	0	0	0	0
C	D	E-END	SB(C+H)	SB(C1+H1)	E-END	C1	D1
5	2	7	5	0	0	0	0
E	F	S-END	EB(A+F)	EB(A1+F1)	S-END	E1	F1
1	1	2	1	0	0	0	0
G	H	W-END	WB(B+E)	WB(B1+E1)	W-END	G1	H1
3	0	3	1	0	0	0	0

TOTAL PEDESTRIAN 12 — **TOTAL JAY-WALK** 0

TOTAL PEDESTRIAN (Incldd JAY-WALK) 12

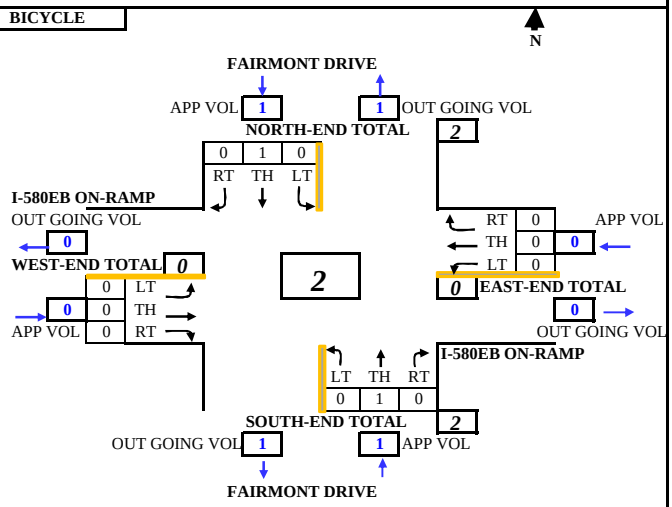

SURVEY DATA

TIME From	To	PEDESTRIAN @ CROSSWALK / STOP LINE N-END A	N-END B	E-END C	E-END D	S-END E	S-END F	W-END G	W-END H	TOTAL	JAY-WALK (From Intersection to Midblock) N-END A1	N-END B1	E-END C1	E-END D1	S-END E1	S-END F1	W-END G1	W-END H1	TOTAL	BICYCLE NB SOUTH-END LT	NB TH	NB RT	SB NORTH-END LT	SB TH	SB RT	EB WEST-END LT	EB TH	EB RT	WB EAST-END LT	WB TH	WB RT	TOTAL	OVER ALL TOTAL
07:00 AM	07:15 AM	0	0	2	0	0	0	0	0		0	0	0	0	0	0	0	0		0	1	0	0	0	0	0	0	0	0	0	0			3
07:15 AM	07:30 AM	0	0	3	1	0	0	1	0		0	0	0	0	0	0	0	0		0	2	0	0	0	0	0	0	0	0	0	0			7
07:30 AM	07:45 AM	0	0	5	1	0	0	1	0		0	0	0	0	0	0	0	0		0	2	0	0	0	0	0	0	0	0	0	0			9
07:45 AM	08:00 AM	0	0	6	1	0	0	1	0		0	0	0	0	0	0	0	0		0	2	0	0	0	0	0	0	0	0	0	0			10
08:00 AM	08:15 AM	0	0	6	2	0	0	2	0		0	0	0	0	0	0	0	0		0	2	0	0	1	0	0	0	0	0	0	0			13
08:15 AM	08:30 AM	0	0	8	3	1	1	4	0		0	0	0	0	0	0	0	0		0	3	0	0	1	0	0	0	0	0	0	0			21
08:30 AM	08:45 AM	0	0	9	4	1	1	4	0		0	0	0	0	0	0	0	0		0	3	0	0	1	0	0	0	1	0	0	0			24
08:45 AM	09:00 AM	0	0	10	4	1	1	4	0		0	0	0	0	0	0	0	0		0	4	0	0	2	0	0	0	1	0	0	0			27

TOTAL BY PERIOD

TIME From	To	PEDESTRIAN A	B	C	D	E	F	G	H	TOTAL	A1	B1	C1	D1	E1	F1	G1	H1	TOTAL	NB LT	NB TH	NB RT	SB LT	SB TH	SB RT	EB LT	EB TH	EB RT	WB LT	WB TH	WB RT	TOTAL	OVER ALL TOTAL
07:00 AM	07:15 AM	0	0	2	0	0	0	0	0	2	0	0	0	0	0	0	0	0	0	0	1	0	0	0	0	0	0	0	0	0	0	1	3
07:15 AM	07:30 AM	0	0	1	1	0	0	1	0	3	0	0	0	0	0	0	0	0	0	0	1	0	0	0	0	0	0	0	0	0	0	1	4
07:30 AM	07:45 AM	0	0	2	0	0	0	0	0	2	0	0	0	0	0	0	0	0	0	0	0	0	0	0	0	0	0	0	0	0	0	0	2
07:45 AM	08:00 AM	0	0	1	0	0	0	0	0	1	0	0	0	0	0	0	0	0	0	0	0	0	0	0	0	0	0	0	0	0	0	0	1
08:00 AM	08:15 AM	0	0	0	1	0	0	1	0	2	0	0	0	0	0	0	0	0	0	0	0	0	0	1	0	0	0	0	0	0	0	1	3
08:15 AM	08:30 AM	0	0	2	1	1	1	2	0	7	0	0	0	0	0	0	0	0	0	0	1	0	0	0	0	0	0	0	0	0	0	1	8
08:30 AM	08:45 AM	0	0	1	1	0	0	0	0	2	0	0	0	0	0	0	0	0	0	0	0	0	0	0	0	0	0	1	0	0	0	1	3
08:45 AM	09:00 AM	0	0	1	0	0	0	0	0	1	0	0	0	0	0	0	0	0	0	0	1	0	0	1	0	0	0	0	0	0	0	2	3

HOURLY TOTALS

TIME From	To	PEDESTRIAN A	B	C	D	E	F	G	H	TOTAL	A1	B1	C1	D1	E1	F1	G1	H1	TOTAL	NB LT	NB TH	NB RT	SB LT	SB TH	SB RT	EB LT	EB TH	EB RT	WB LT	WB TH	WB RT	TOTAL	OVER ALL TOTAL
07:00 AM	08:00 AM	0	0	6	1	0	0	1	0	8	0	0	0	0	0	0	0	0	0	0	2	0	0	0	0	0	0	0	0	0	0	2	10
07:15 AM	08:15 AM	0	0	4	2	0	0	2	0	8	0	0	0	0	0	0	0	0	0	0	1	0	0	1	0	0	0	0	0	0	0	2	10
07:30 AM	08:30 AM	0	0	5	2	1	1	3	0	12	0	0	0	0	0	0	0	0	0	0	1	0	0	1	0	0	0	0	0	0	0	2	14
07:45 AM	08:45 AM	0	0	4	3	1	1	3	0	12	0	0	0	0	0	0	0	0	0	0	1	0	0	1	0	0	0	1	0	0	0	3	15
08:00 AM	09:00 AM	0	0	4	3	1	1	3	0	12	0	0	0	0	0	0	0	0	0	0	2	0	0	2	0	0	0	1	0	0	0	5	17

SUMMARY (HOURLY COUNT)

TIME From	To	PEDESTRIAN COUNTS BY LEG* N-END	S-END	E-END	W-END	TOTAL	PEDESTRIAN COUNTS BY DIRECTION* NB	SB	EB	WB	TOTAL	BICYCLE COUNTS NB	SB	EB	WB	TOTAL
07:00 AM	08:00 AM	0	0	7	1	8	2	6	0	0	8	2	0	0	0	2
07:15 AM	08:15 AM	0	0	6	2	8	4	4	0	0	8	1	1	0	0	2
07:30 AM	08:30 AM	0	2	7	3	12	5	5	1	1	12	1	1	0	0	2
07:45 AM	08:45 AM	0	2	7	3	12	6	4	1	1	12	1	1	1	0	3
08:00 AM	09:00 AM	0	2	7	3	12	6	4	1	1	12	2	2	1	0	5

Tel : (510) 232-1271 *Fax: (510) 232-1272*

* Included Jay-Walk

B.A.Y.M.E.T.R.I.C.S.

INTERSECTION TURNING MOVEMENT SUMMARY

PROJECT:	**JUVENILE JUSTICE CENTER TRAFFIC COUNTS**	**SURVEY DATE:**	**7/14/2015**	**DAY:**	**TUESDAY**
N-S APPROACH:	**FAIRMONT DRIVE**	**SURVEY TIME:**	**4:00 PM**	**TO**	**6:00 PM**
E-W APPROACH:	**I-580EB ON-RAMP - FREEDOM AVENUE**	**JURISDICTION:**	**ALAMEDA COUNTY**	**FILE:**	**3507085-3PM**

PEAK HOUR
5:00 PM to 6:00 PM

NORTH

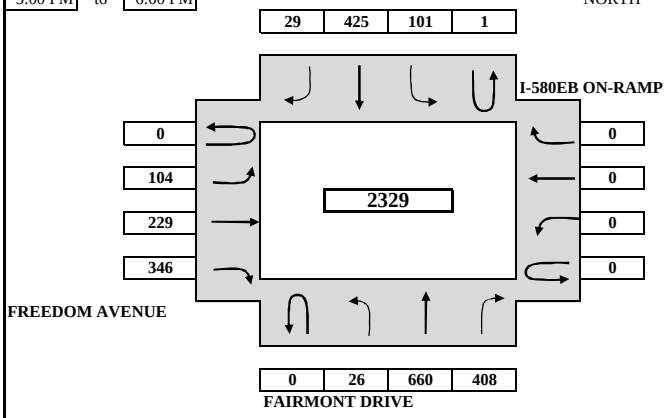

ARRIVAL / DEPARTURE VOLUMES

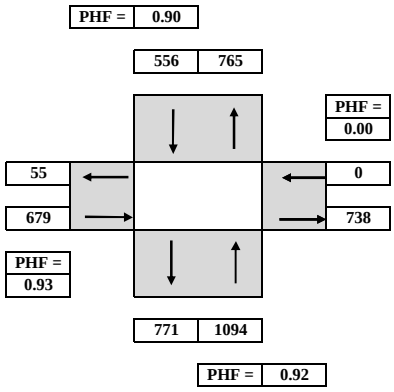

TIME PERIOD From	To	NORTHBOUND U-TURN	LEFT	THRU	RIGHT	SOUTHBOUND U-TURN	LEFT	THRU	RIGHT	EASTBOUND U-TURN	LEFT	THRU	RIGHT	WESTBOUND U-TURN	LEFT	THRU	RIGHT	TOTAL
SURVEY DATA																		
4:00 PM	4:15 PM		6	132	92	0	25	102	6		25	47	101					**536**
4:15 PM	4:30 PM		14	283	176	0	45	209	11		54	92	187					**1071**
4:30 PM	4:45 PM		17	412	279	0	72	335	24		79	161	265					**1644**
4:45 PM	5:00 PM		24	560	382	0	105	421	28		105	214	365					**2204**
5:00 PM	5:15 PM		28	705	469	0	135	534	33		141	269	444					**2758**
5:15 PM	5:30 PM		36	884	578	1	155	636	41		169	326	533					**3359**
5:30 PM	5:45 PM		43	1041	683	1	183	754	50		188	376	617					**3936**
5:45 PM	6:00 PM		50	1220	790	1	206	846	57		209	443	711					**4533**
TOTAL BY PERIOD																		
4:00 PM	4:15 PM	0	6	132	92	0	25	102	6	0	25	47	101	0	0	0	0	**536**
4:15 PM	4:30 PM	0	8	151	84	0	20	107	5	0	29	45	86	0	0	0	0	**535**
4:30 PM	4:45 PM	0	3	129	103	0	27	126	13	0	25	69	78	0	0	0	0	**573**
4:45 PM	5:00 PM	0	7	148	103	0	33	86	4	0	26	53	100	0	0	0	0	**560**
5:00 PM	5:15 PM	0	4	145	87	0	30	113	5	0	36	55	79	0	0	0	0	**554**
5:15 PM	5:30 PM	0	8	179	109	1	20	102	8	0	28	57	89	0	0	0	0	**601**
5:30 PM	5:45 PM	0	7	157	105	0	28	118	9	0	19	50	84	0	0	0	0	**577**
5:45 PM	6:00 PM	0	7	179	107	0	23	92	7	0	21	67	94	0	0	0	0	**597**
HOURLY TOTALS																		
4:00 PM	5:00 PM	0	24	560	382	0	105	421	28	0	105	214	365	0	0	0	0	**2204**
4:15 PM	5:15 PM	0	22	573	377	0	110	432	27	0	116	222	343	0	0	0	0	**2222**
4:30 PM	5:30 PM	0	22	601	402	1	110	427	30	0	115	234	346	0	0	0	0	**2288**
4:45 PM	5:45 PM	0	26	629	404	1	111	419	26	0	109	215	352	0	0	0	0	**2292**
5:00 PM	6:00 PM	0	26	660	408	1	101	425	29	0	104	229	346	0	0	0	0	**2329**

PEAK HOUR SUMMARY

5:00 PM to 6:00 PM	NORTHBOUND NBU	NBL	NBT	NBR	SOUTHBOUND SBU	SBL	SBT	SBR	EASTBOUND EBU	EBL	EBT	EBR	WESTBOUND WBU	WBL	WBT	WBR	TOTAL
VOLUME	0	26	660	408	1	101	425	29	0	104	229	346	0	0	0	0	**2329**
PHF BY MOVEMENT	0.00	0.81	0.92	0.94	0.25	0.84	0.90	0.81	0.00	0.72	0.85	0.92	0.00	0.00	0.00	0.00	OVERALL
PHF BY APPROACH	0.92				0.90				0.93				0.00				**0.97**
BICYCLE (by Direction)	0				0				0				0				**0**
PED (by Direction) *	5				3				1				0				**9**
	NORTH-END				SOUTH-END				EAST-END				WEST-END				
PED (by Leg) *	0				1				7				1				**9**

TEL: (510) 232 - 1271 FAX: (510) 232 - 1272

* Included Jay-Walk

B.A.Y.M.E.T.R.I.C.S.

PEDESTRIAN & BICYCLE MOVEMENT SUMMARY

PROJECT:	**JUVENILE JUSTICE CENTER TRAFFIC COUNTS**	**SURVEY DATE:**	**7/14/2015**	**DAY:**	**TUESDAY**
N-S APPROACH:	**FAIRMONT DRIVE**	**SURVEY PERIOD**	**4:00 PM**	**to**	**6:00 PM**
E-W APPROACH:	**I-580EB ON-RAMP - FREEDOM AVENUE**	**JURISDICTION:**	**ALAMEDA COUNTY**	**FILE:**	**3507085-3PM**

PEAK HOUR SUMMARY

PEAK HOUR: 05:00 PM TO 06:00 PM

PEDESTRIAN | **BICYCLE**

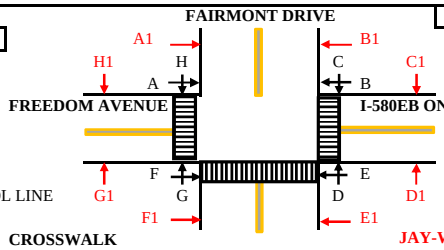

LEGEND:
- CROSSWALK
- SIDEWALK
- STOP CONTROL LINE

CROSSWALK — **JAY-WALK (in RED)**

A	B	BY LEG N-END	BY DIR NB(D+G)	BY DIR NB(D1+G1)	BY LEG N-END	A1	B1
0	0	0	5	0	0	0	0
C	D	E-END	SB(C+H)	SB(C1+H1)	E-END	C1	D1
3	4	7	3	0	0	0	0
E	F	S-END	EB(A+F)	EB(A1+F1)	S-END	E1	F1
0	1	1	1	0	0	0	0
G	H	W-END	WB(B+E)	WB(B1+E1)	W-END	G1	H1
1	0	1	0	0	0	0	0

TOTAL PEDESTIAN 9 — **TOTAL JAY-WALK** 0

TOTAL PEDESTIAN (Incided JAY-WALK) 9

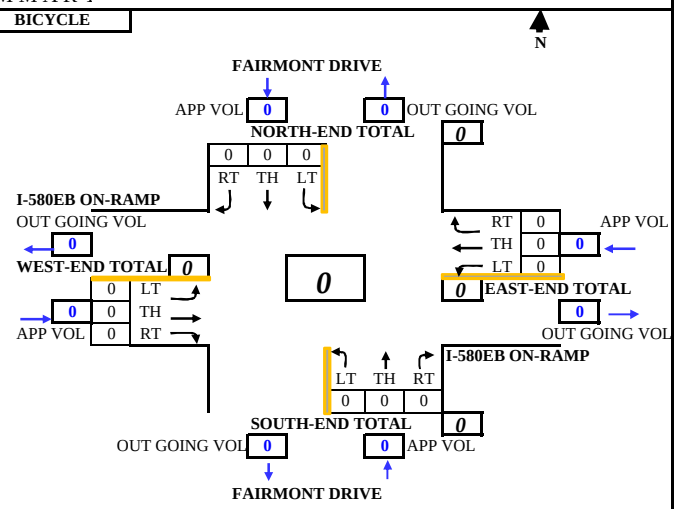

TIME From	To	PEDESTRIAN @ CROSSWALK / STOP LINE N-END A	N-END B	E-END C	E-END D	S-END E	S-END F	W-END G	W-END H	TOTAL	JAY-WALK (From Intersection to Midblock) N-END A1	N-END B1	E-END C1	E-END D1	S-END E1	S-END F1	W-END G1	W-END H1	TOTAL	BICYCLE NB SOUTH-END LT	NB TH	NB RT	SB NORTH-END LT	SB TH	SB RT	EB WEST-END LT	EB TH	EB RT	WB EAST-END LT	WB TH	WB RT	TOTAL	OVER ALL TOTAL
SURVEY DATA																																	
04:00 PM	04:15 PM	0	0	0	1	0	0	0	0		0	0	0	0	0	0	0	0		0	0	0	0	0	0	0	0	0	0	0	0		1
04:15 PM	04:30 PM	0	0	0	1	0	0	2	1		0	0	0	0	0	0	0	0		0	0	0	0	0	0	0	0	0	0	0	0		4
04:30 PM	04:45 PM	0	0	0	2	0	0	2	1		0	0	0	0	0	0	0	0		0	0	0	0	0	0	0	0	0	0	0	0		5
04:45 PM	05:00 PM	0	0	1	2	0	0	2	3		0	0	0	0	0	0	0	0		0	0	0	0	0	0	0	0	0	0	0	0		8
05:00 PM	05:15 PM	0	0	2	3	0	0	3	3		0	0	0	0	0	0	0	0		0	0	0	0	0	0	0	0	0	0	0	0		11
05:15 PM	05:30 PM	0	0	2	3	0	1	3	3		0	0	0	0	0	0	0	0		0	0	0	0	0	0	0	0	0	0	0	0		12
05:30 PM	05:45 PM	0	0	3	4	0	1	3	3		0	0	0	0	0	0	0	0		0	0	0	0	0	0	0	0	0	0	0	0		14
05:45 PM	06:00 PM	0	0	4	6	0	1	3	3		0	0	0	0	0	0	0	0		0	0	0	0	0	0	0	0	0	0	0	0		17
TOTAL BY PERIOD																																	
04:00 PM	04:15 PM	0	0	0	1	0	0	0	0	1	0	0	0	0	0	0	0	0	0	0	0	0	0	0	0	0	0	0	0	0	0	0	1
04:15 PM	04:30 PM	0	0	0	0	0	0	2	1	3	0	0	0	0	0	0	0	0	0	0	0	0	0	0	0	0	0	0	0	0	0	0	3
04:30 PM	04:45 PM	0	0	0	1	0	0	0	0	1	0	0	0	0	0	0	0	0	0	0	0	0	0	0	0	0	0	0	0	0	0	0	1
04:45 PM	05:00 PM	0	0	1	0	0	0	0	2	3	0	0	0	0	0	0	0	0	0	0	0	0	0	0	0	0	0	0	0	0	0	0	3
05:00 PM	05:15 PM	0	0	1	1	0	0	1	0	3	0	0	0	0	0	0	0	0	0	0	0	0	0	0	0	0	0	0	0	0	0	0	3
05:15 PM	05:30 PM	0	0	0	0	0	1	0	0	1	0	0	0	0	0	0	0	0	0	0	0	0	0	0	0	0	0	0	0	0	0	0	1
05:30 PM	05:45 PM	0	0	1	1	0	0	0	0	2	0	0	0	0	0	0	0	0	0	0	0	0	0	0	0	0	0	0	0	0	0	0	2
05:45 PM	06:00 PM	0	0	1	2	0	0	0	0	3	0	0	0	0	0	0	0	0	0	0	0	0	0	0	0	0	0	0	0	0	0	0	3
HOURLY TOTALS																																	
04:00 PM	05:00 PM	0	0	1	2	0	0	2	3	8	0	0	0	0	0	0	0	0	0	0	0	0	0	0	0	0	0	0	0	0	0	0	8
04:15 PM	05:15 PM	0	0	2	2	0	0	3	3	10	0	0	0	0	0	0	0	0	0	0	0	0	0	0	0	0	0	0	0	0	0	0	10
04:30 PM	05:30 PM	0	0	2	2	0	1	1	2	8	0	0	0	0	0	0	0	0	0	0	0	0	0	0	0	0	0	0	0	0	0	0	8
04:45 PM	05:45 PM	0	0	3	2	0	1	1	2	9	0	0	0	0	0	0	0	0	0	0	0	0	0	0	0	0	0	0	0	0	0	0	9
05:00 PM	06:00 PM	0	0	3	4	0	1	1	0	9	0	0	0	0	0	0	0	0	0	0	0	0	0	0	0	0	0	0	0	0	0	0	9

SUMMARY (HOURLY COUNT)

TIME From	To	PEDESTRIAN COUNTS BY LEG* N-END	S-END	E-END	W-END	TOTAL	PEDESTRIAN COUNTS BY DIRECTION* NB	SB	EB	WB	TOTAL	BICYCLE COUNTS NB	SB	EB	WB	TOTAL
04:00 PM	05:00 PM	0	0	3	5	8	4	4	0	0	8	0	0	0	0	0
04:15 PM	05:15 PM	0	0	4	6	10	5	5	0	0	10	0	0	0	0	0
04:30 PM	05:30 PM	0	1	4	3	8	3	4	1	0	8	0	0	0	0	0
04:45 PM	05:45 PM	0	1	5	3	9	3	5	1	0	9	0	0	0	0	0
05:00 PM	06:00 PM	0	1	7	1	9	5	3	1	0	9	0	0	0	0	0

Tel : (510) 232-1271 *Fax: (510) 232-1272*

* Included Jay-Walk

B.A.Y.M.E.T.R.I.C.S.

INTERSECTION TURNING MOVEMENT SUMMARY

PROJECT:	**JUVENILE JUSTICE CENTER TRAFFIC COUNTS**	**SURVEY DATE:**	**7/14/2015**	**DAY:**	**TUESDAY**
N-S APPROACH:	**I-580WB ON-RAMP**	**SURVEY TIME:**	**7:00 AM**	**TO**	**9:00 AM**
E-W APPROACH:	**FOOTHILL BOULEVARD**	**JURISDICTION:**	**ALAMEDA COUNTY**	**FILE:**	**3507085-4AM**

PEAK HOUR
7:45 AM to 8:45 AM

NORTH

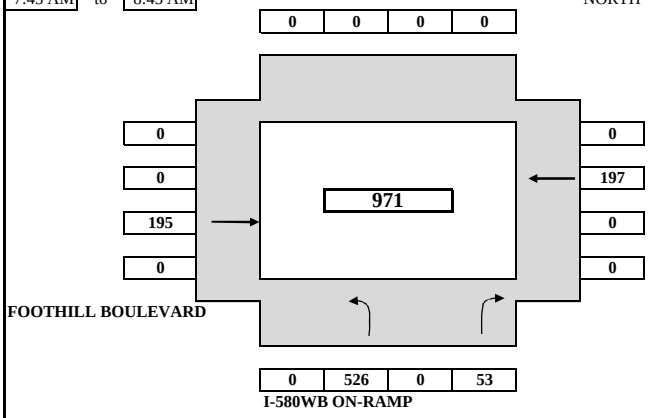

ARRIVAL / DEPARTURE VOLUMES

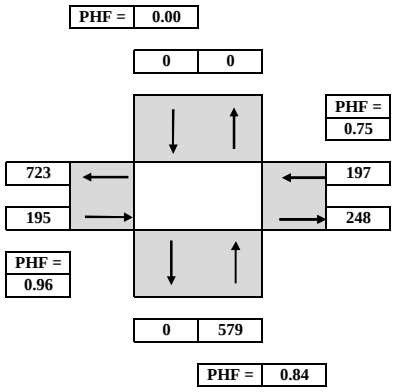

TIME PERIOD From	To	NORTHBOUND U-TURN	LEFT	THRU	RIGHT	SOUTHBOUND U-TURN	LEFT	THRU	RIGHT	EASTBOUND U-TURN	LEFT	THRU	RIGHT	WESTBOUND U-TURN	LEFT	THRU	RIGHT	TOTAL
SURVEY DATA																		
7:00 AM	7:15 AM		85		10							33				17		**145**
7:15 AM	7:30 AM		187		15							64				53		**319**
7:30 AM	7:45 AM		324		26							99				104		**553**
7:45 AM	8:00 AM		472		38							146				151		**807**
8:00 AM	8:15 AM		585		49							197				217		**1048**
8:15 AM	8:30 AM		691		66							244				254		**1255**
8:30 AM	8:45 AM		850		79							294				301		**1524**
8:45 AM	9:00 AM		982		93							343				353		**1771**
TOTAL BY PERIOD																		
7:00 AM	7:15 AM	0	85	0	10	0	0	0	0	0	0	33	0	0	0	17	0	**145**
7:15 AM	7:30 AM	0	102	0	5	0	0	0	0	0	0	31	0	0	0	36	0	**174**
7:30 AM	7:45 AM	0	137	0	11	0	0	0	0	0	0	35	0	0	0	51	0	**234**
7:45 AM	8:00 AM	0	148	0	12	0	0	0	0	0	0	47	0	0	0	47	0	**254**
8:00 AM	8:15 AM	0	113	0	11	0	0	0	0	0	0	51	0	0	0	66	0	**241**
8:15 AM	8:30 AM	0	106	0	17	0	0	0	0	0	0	47	0	0	0	37	0	**207**
8:30 AM	8:45 AM	0	159	0	13	0	0	0	0	0	0	50	0	0	0	47	0	**269**
8:45 AM	9:00 AM	0	132	0	14	0	0	0	0	0	0	49	0	0	0	52	0	**247**
HOURLY TOTALS																		
7:00 AM	8:00 AM	0	472	0	38	0	0	0	0	0	0	146	0	0	0	151	0	**807**
7:15 AM	8:15 AM	0	500	0	39	0	0	0	0	0	0	164	0	0	0	200	0	**903**
7:30 AM	8:30 AM	0	504	0	51	0	0	0	0	0	0	180	0	0	0	201	0	**936**
7:45 AM	8:45 AM	0	526	0	53	0	0	0	0	0	0	195	0	0	0	197	0	**971**
8:00 AM	9:00 AM	0	510	0	55	0	0	0	0	0	0	197	0	0	0	202	0	**964**

PEAK HOUR SUMMARY

7:45 AM to 8:45 AM	NORTHBOUND NBU	NBL	NBT	NBR	SOUTHBOUND SBU	SBL	SBT	SBR	EASTBOUND EBU	EBL	EBT	EBR	WESTBOUND WBU	WBL	WBT	WBR	TOTAL
VOLUME	0	526	0	53	0	0	0	0	0	0	195	0	0	0	197	0	**971**
PHF BY MOVEMENT	0.00	0.83	0.00	0.78	0.00	0.00	0.00	0.00	0.00	0.00	0.96	0.00	0.00	0.00	0.75	0.00	OVERALL
PHF BY APPROACH	0.84				0.00				0.96				0.75				**0.90**
BICYCLE (by Direction)	0				0				1				0				**1**
PED (by Direction) *	0				0				0				0				**0**
	NORTH-END				SOUTH-END				EAST-END				WEST-END				
PED (by Leg) *	0				0				0				0				**0**

TEL: (510) 232 - 1271 FAX: (510) 232 - 1272

* Included Jay-Walk

B.A.Y.M.E.T.R.I.C.S.

PEDESTRIAN & BICYCLE MOVEMENT SUMMARY

PROJECT:	**JUVENILE JUSTICE CENTER TRAFFIC COUNTS**	**SURVEY DATE:**	**7/14/2015**	**DAY:**	**TUESDAY**
N-S APPROACH:	**I-580WB ON-RAMP**	**SURVEY PERIOD**	**7:00 AM**	**to**	**9:00 AM**
E-W APPROACH:	**FOOTHILL BOULEVARD**	**JURISDICTION:**	**ALAMEDA COUNTY**	**FILE:**	**3507085-4AM**

PEAK HOUR SUMMARY

PEAK HOUR: 07:45 AM TO 08:45 AM

PEDESTRIAN | **BICYCLE**

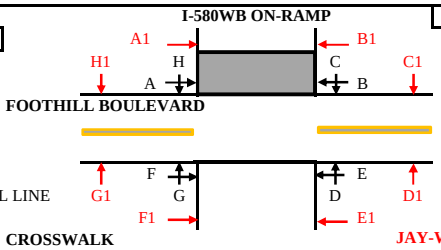

LEGEND:
- CROSSWALK
- SIDEWALK
- STOP CONTROL LINE

CROSSWALK — **JAY-WALK (in RED)**

A	B	BY LEG N-END	BY DIR NB(D+G)	BY DIR NB(D1+G1)	BY LEG N-END	A1	B1
0	0	0	0	0	0	0	0
C	D	E-END	SB(C+H)	SB(C1+H1)	E-END	C1	D1
0	0	0	0	0	0	0	0
E	F	S-END	EB(A+F)	EB(A1+F1)	S-END	E1	F1
0	0	0	0	0	0	0	0
G	H	W-END	WB(B+E)	WB(B1+E1)	W-END	G1	H1
0	0	0	0	0	0	0	0

TOTAL PEDESTIAN 0 — **TOTAL JAY-WALK** 0

TOTAL PEDESTIAN (Incided JAY-WALK) 0

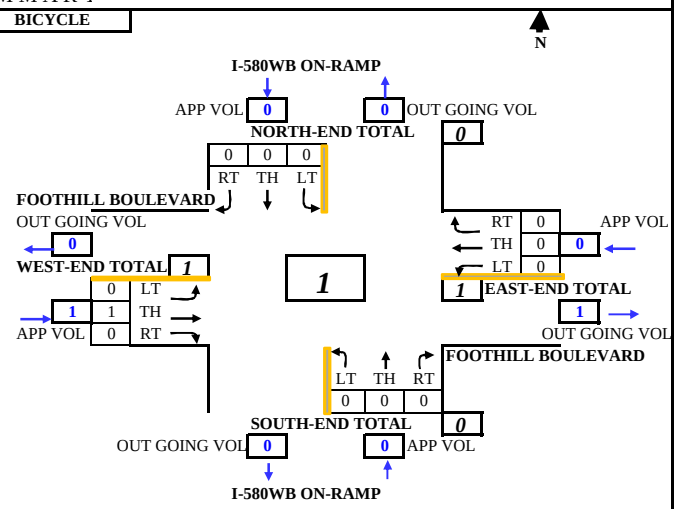

TIME From	To	PEDESTRIAN @ CROSSWALK / STOP LINE N-END A	B	E-END C	D	S-END E	F	W-END G	H	TOTAL	JAY-WALK (From Intersection to Midblock) N-END A1	B1	E-END C1	D1	S-END E1	F1	W-END G1	H1	TOTAL	BICYCLE NB SOUTH-END LT	TH	RT	SB NORTH-END LT	TH	RT	EB WEST-END LT	TH	RT	WB EAST-END LT	TH	RT	TOTAL	OVER ALL TOTAL
SURVEY DATA																																	
07:00 AM	07:15 AM	0	0	0	0	0	0	0	0		0	0	0	0	0	0	0	0		0	0	0	0	0	0	0	0	0	0	0	0		0
07:15 AM	07:30 AM	0	0	0	0	0	0	0	0		0	0	0	0	0	0	0	0		0	0	0	0	0	0	0	1	0	0	0	0		1
07:30 AM	07:45 AM	0	0	0	0	0	0	0	0		0	0	0	0	0	0	0	0		0	0	0	0	0	0	0	1	0	0	0	0		1
07:45 AM	08:00 AM	0	0	0	0	0	0	0	0		0	0	0	0	0	0	0	0		0	0	0	0	0	0	0	1	0	0	0	0		1
08:00 AM	08:15 AM	0	0	0	0	0	0	0	0		0	0	0	0	0	0	0	0		0	0	0	0	0	0	0	1	0	0	0	0		1
08:15 AM	08:30 AM	0	0	0	0	0	0	0	0		0	0	0	0	0	0	0	0		0	0	0	0	0	0	0	1	0	0	0	0		1
08:30 AM	08:45 AM	0	0	0	0	0	0	0	0		0	0	0	0	0	0	0	0		0	0	0	0	0	0	0	2	0	0	0	0		2
08:45 AM	09:00 AM	0	0	0	0	0	0	0	0		0	0	0	0	0	0	0	0		0	0	0	0	0	0	0	3	0	0	0	0		3
TOTAL BY PERIOD																																	
07:00 AM	07:15 AM	0	0	0	0	0	0	0	0	0	0	0	0	0	0	0	0	0	0	0	0	0	0	0	0	0	0	0	0	0	0	0	0
07:15 AM	07:30 AM	0	0	0	0	0	0	0	0	0	0	0	0	0	0	0	0	0	0	0	0	0	0	0	0	0	1	0	0	0	0	1	1
07:30 AM	07:45 AM	0	0	0	0	0	0	0	0	0	0	0	0	0	0	0	0	0	0	0	0	0	0	0	0	0	0	0	0	0	0	0	0
07:45 AM	08:00 AM	0	0	0	0	0	0	0	0	0	0	0	0	0	0	0	0	0	0	0	0	0	0	0	0	0	0	0	0	0	0	0	0
08:00 AM	08:15 AM	0	0	0	0	0	0	0	0	0	0	0	0	0	0	0	0	0	0	0	0	0	0	0	0	0	0	0	0	0	0	0	0
08:15 AM	08:30 AM	0	0	0	0	0	0	0	0	0	0	0	0	0	0	0	0	0	0	0	0	0	0	0	0	0	0	0	0	0	0	0	0
08:30 AM	08:45 AM	0	0	0	0	0	0	0	0	0	0	0	0	0	0	0	0	0	0	0	0	0	0	0	0	0	1	0	0	0	0	1	1
08:45 AM	09:00 AM	0	0	0	0	0	0	0	0	0	0	0	0	0	0	0	0	0	0	0	0	0	0	0	0	0	1	0	0	0	0	1	1
HOURLY TOTALS																																	
07:00 AM	08:00 AM	0	0	0	0	0	0	0	0	0	0	0	0	0	0	0	0	0	0	0	0	0	0	0	0	0	1	0	0	0	0	1	1
07:15 AM	08:15 AM	0	0	0	0	0	0	0	0	0	0	0	0	0	0	0	0	0	0	0	0	0	0	0	0	0	1	0	0	0	0	1	1
07:30 AM	08:30 AM	0	0	0	0	0	0	0	0	0	0	0	0	0	0	0	0	0	0	0	0	0	0	0	0	0	0	0	0	0	0	0	0
07:45 AM	08:45 AM	0	0	0	0	0	0	0	0	0	0	0	0	0	0	0	0	0	0	0	0	0	0	0	0	0	1	0	0	0	0	1	1
08:00 AM	09:00 AM	0	0	0	0	0	0	0	0	0	0	0	0	0	0	0	0	0	0	0	0	0	0	0	0	0	2	0	0	0	0	2	2

SUMMARY (HOURLY COUNT)

TIME From	To	PEDESTRIAN COUNTS BY LEG* N-END	S-END	E-END	W-END	TOTAL	PEDESTRIAN COUNTS BY DIRECTION* NB	SB	EB	WB	TOTAL	BICYCLE COUNTS NB	SB	EB	WB	TOTAL
07:00 AM	08:00 AM	0	0	0	0	0	0	0	0	0	0	0	0	1	0	1
07:15 AM	08:15 AM	0	0	0	0	0	0	0	0	0	0	0	0	1	0	1
07:30 AM	08:30 AM	0	0	0	0	0	0	0	0	0	0	0	0	0	0	0
07:45 AM	08:45 AM	0	0	0	0	0	0	0	0	0	0	0	0	1	0	1
08:00 AM	09:00 AM	0	0	0	0	0	0	0	0	0	0	0	0	2	0	2

Tel : (510) 232-1271 *Fax: (510) 232-1272*

* Included Jay-Walk

B.A.Y.M.E.T.R.I.C.S.

INTERSECTION TURNING MOVEMENT SUMMARY

PROJECT:	**JUVENILE JUSTICE CENTER TRAFFIC COUNTS**	**SURVEY DATE:**	**7/14/2015**	**DAY:**	**TUESDAY**
N-S APPROACH:	**I-580WB ON-RAMP**	**SURVEY TIME:**	**4:00 PM**	**TO**	**6:00 PM**
E-W APPROACH:	**FOOTHILL BOULEVARD**	**JURISDICTION:**	**ALAMEDA COUNTY**	**FILE:**	**3507085-4PM**

PEAK HOUR

4:15 PM to 5:15 PM

NORTH

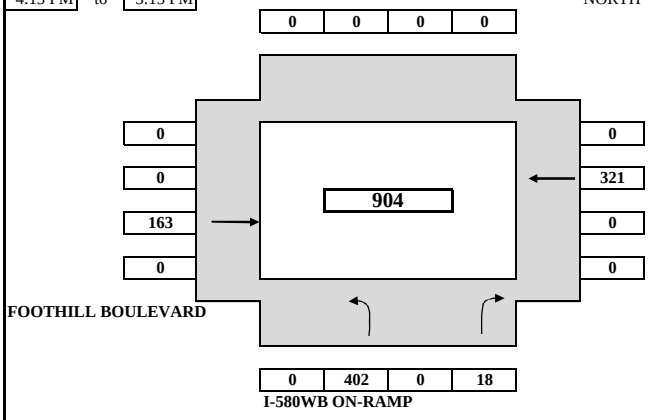

ARRIVAL / DEPARTURE VOLUMES

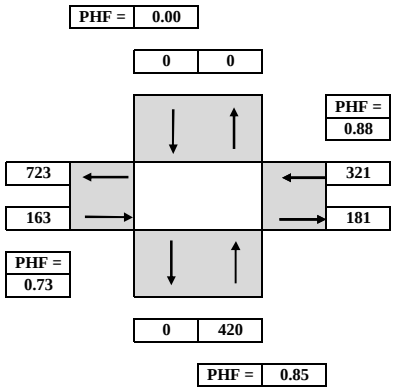

TIME PERIOD From	To	NORTHBOUND U-TURN	LEFT	THRU	RIGHT	SOUTHBOUND U-TURN	LEFT	THRU	RIGHT	EASTBOUND U-TURN	LEFT	THRU	RIGHT	WESTBOUND U-TURN	LEFT	THRU	RIGHT	TOTAL
SURVEY DATA																		
4:00 PM	4:15 PM		89		8							45				63		**205**
4:15 PM	4:30 PM		208		13							101				130		**452**
4:30 PM	4:45 PM		314		14							128				221		**677**
4:45 PM	5:00 PM		383		15							172				307		**877**
5:00 PM	5:15 PM		491		26							208				384		**1109**
5:15 PM	5:30 PM		596		28							250				450		**1324**
5:30 PM	5:45 PM		707		28							294				508		**1537**
5:45 PM	6:00 PM		815		31							339				562		**1747**
TOTAL BY PERIOD																		
4:00 PM	4:15 PM	0	89	0	8	0	0	0	0	0	0	45	0	0	0	63	0	**205**
4:15 PM	4:30 PM	0	119	0	5	0	0	0	0	0	0	56	0	0	0	67	0	**247**
4:30 PM	4:45 PM	0	106	0	1	0	0	0	0	0	0	27	0	0	0	91	0	**225**
4:45 PM	5:00 PM	0	69	0	1	0	0	0	0	0	0	44	0	0	0	86	0	**200**
5:00 PM	5:15 PM	0	108	0	11	0	0	0	0	0	0	36	0	0	0	77	0	**232**
5:15 PM	5:30 PM	0	105	0	2	0	0	0	0	0	0	42	0	0	0	66	0	**215**
5:30 PM	5:45 PM	0	111	0	0	0	0	0	0	0	0	44	0	0	0	58	0	**213**
5:45 PM	6:00 PM	0	108	0	3	0	0	0	0	0	0	45	0	0	0	54	0	**210**
HOURLY TOTALS																		
4:00 PM	5:00 PM	0	383	0	15	0	0	0	0	0	0	172	0	0	0	307	0	**877**
4:15 PM	5:15 PM	0	402	0	18	0	0	0	0	0	0	163	0	0	0	321	0	**904**
4:30 PM	5:30 PM	0	388	0	15	0	0	0	0	0	0	149	0	0	0	320	0	**872**
4:45 PM	5:45 PM	0	393	0	14	0	0	0	0	0	0	166	0	0	0	287	0	**860**
5:00 PM	6:00 PM	0	432	0	16	0	0	0	0	0	0	167	0	0	0	255	0	**870**

PEAK HOUR SUMMARY

4:15 PM to 5:15 PM	NORTHBOUND NBU	NBL	NBT	NBR	SOUTHBOUND SBU	SBL	SBT	SBR	EASTBOUND EBU	EBL	EBT	EBR	WESTBOUND WBU	WBL	WBT	WBR	TOTAL
VOLUME	0	402	0	18	0	0	0	0	0	0	163	0	0	0	321	0	**904**
PHF BY MOVEMENT	0.00	0.84	0.00	0.41	0.00	0.00	0.00	0.00	0.00	0.00	0.73	0.00	0.00	0.00	0.88	0.00	OVERALL
PHF BY APPROACH	0.85				0.00				0.73				0.88				**0.91**
BICYCLE (by Direction)	0				0				0				0				**0**
PED (by Direction) *	0				0				0				0				**0**
	NORTH-END				SOUTH-END				EAST-END				WEST-END				
PED (by Leg) *	0				0				0				0				**0**

TEL: (510) 232 - 1271 FAX: (510) 232 - 1272

* Included Jay-Walk

B.A.Y.M.E.T.R.I.C.S.

PEDESTRIAN & BICYCLE MOVEMENT SUMMARY

PROJECT:	**JUVENILE JUSTICE CENTER TRAFFIC COUNTS**	**SURVEY DATE:**	**7/14/2015**	**DAY:**	**TUESDAY**
N-S APPROACH:	**I-580WB ON-RAMP**	**SURVEY PERIOD**	**4:00 PM**	**to**	**6:00 PM**
E-W APPROACH:	**FOOTHILL BOULEVARD**	**JURISDICTION:**	**ALAMEDA COUNTY**	**FILE:**	**=S6**

PEAK HOUR SUMMARY

PEAK HOUR 04:15 PM TO 05:15 PM

PEDESTRIAN | **BICYCLE**

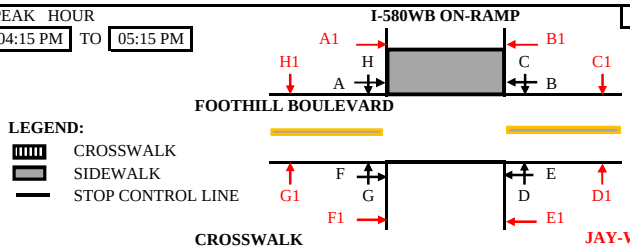

LEGEND:
- CROSSWALK
- SIDEWALK
- STOP CONTROL LINE

CROSSWALK — **JAY-WALK (in RED)**

A	B	BY LEG N-END	BY DIR NB(D+G)	BY DIR NB(D1+G1)	BY LEG N-END	A1	B1
0	0	0	0	0	0	0	0
C	D	E-END	SB(C+H)	SB(C1+H1)	E-END	C1	D1
0	0	0	0	0	0	0	0
E	F	S-END	EB(A+F)	EB(A1+F1)	S-END	E1	F1
0	0	0	0	0	0	0	0
G	H	W-END	WB(B+E)	WB(B1+E1)	W-END	G1	H1
0	0	0	0	0	0	0	0

TOTAL PEDESTIAN 0 — **TOTAL JAY-WALK** 0

TOTAL PEDESTIAN (Incided JAY-WALK) 0

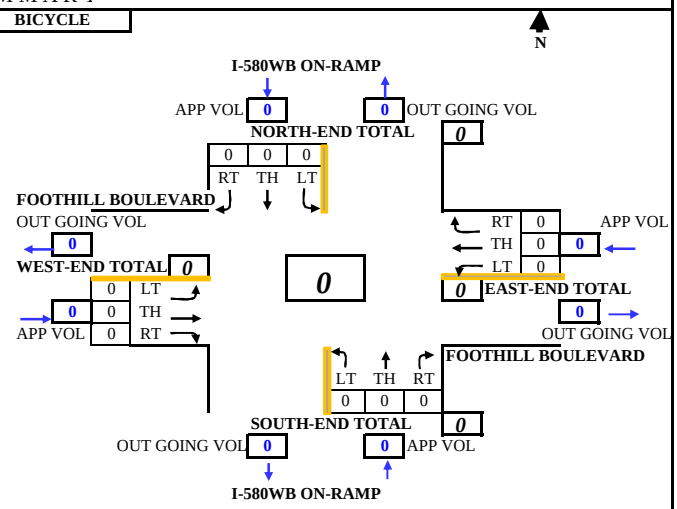

TIME From	TIME To	PEDESTRIAN @ CROSSWALK / STOP LINE N-END A	N-END B	E-END C	E-END D	S-END E	S-END F	W-END G	W-END H	TOTAL	PEDESTRIAN JAY-WALK (From Intersection to Midblock) N-END A1	N-END B1	E-END C1	E-END D1	S-END E1	S-END F1	W-END G1	W-END H1	TOTAL	BICYCLE NB SOUTH-END LT	NB TH	NB RT	SB NORTH-END LT	SB TH	SB RT	EB WEST-END LT	EB TH	EB RT	WB EAST-END LT	WB TH	WB RT	TOTAL	OVER ALL TOTAL
SURVEY DATA																																	
04:00 PM	04:15 PM	0	0	0	0	0	0	0	0		0	0	0	0	0	0	0	0		0	0	0	0	0	0	0	0	0	0	0	0		0
04:15 PM	04:30 PM	0	0	0	0	0	0	0	0		0	0	0	0	0	0	0	0		0	0	0	0	0	0	0	0	0	0	0	0		0
04:30 PM	04:45 PM	0	0	0	0	0	0	0	0		0	0	0	0	0	0	0	0		0	0	0	0	0	0	0	0	0	0	0	0		0
04:45 PM	05:00 PM	0	0	0	0	0	0	0	0		0	0	0	0	0	0	0	0		0	0	0	0	0	0	0	0	0	0	0	0		0
05:00 PM	05:15 PM	0	0	0	0	0	0	0	0		0	0	0	0	0	0	0	0		0	0	0	0	0	0	0	0	0	0	0	0		0
05:15 PM	05:30 PM	0	0	0	0	0	0	0	0		0	0	0	0	0	0	0	0		0	0	0	0	0	0	0	0	0	0	0	0		0
05:30 PM	05:45 PM	0	0	0	0	0	0	0	0		0	0	0	0	0	0	0	0		0	0	0	0	0	0	0	2	0	0	1	0		3
05:45 PM	06:00 PM	0	0	0	0	0	0	0	0		0	0	0	0	0	0	0	0		0	0	0	0	0	0	0	2	0	0	2	0		4
TOTAL BY PERIOD																																	
04:00 PM	04:15 PM	0	0	0	0	0	0	0	0	0	0	0	0	0	0	0	0	0	0	0	0	0	0	0	0	0	0	0	0	0	0	0	0
04:15 PM	04:30 PM	0	0	0	0	0	0	0	0	0	0	0	0	0	0	0	0	0	0	0	0	0	0	0	0	0	0	0	0	0	0	0	0
04:30 PM	04:45 PM	0	0	0	0	0	0	0	0	0	0	0	0	0	0	0	0	0	0	0	0	0	0	0	0	0	0	0	0	0	0	0	0
04:45 PM	05:00 PM	0	0	0	0	0	0	0	0	0	0	0	0	0	0	0	0	0	0	0	0	0	0	0	0	0	0	0	0	0	0	0	0
05:00 PM	05:15 PM	0	0	0	0	0	0	0	0	0	0	0	0	0	0	0	0	0	0	0	0	0	0	0	0	0	0	0	0	0	0	0	0
05:15 PM	05:30 PM	0	0	0	0	0	0	0	0	0	0	0	0	0	0	0	0	0	0	0	0	0	0	0	0	0	0	0	0	0	0	0	0
05:30 PM	05:45 PM	0	0	0	0	0	0	0	0	0	0	0	0	0	0	0	0	0	0	0	0	0	0	0	0	0	2	0	0	1	0	3	3
05:45 PM	06:00 PM	0	0	0	0	0	0	0	0	0	0	0	0	0	0	0	0	0	0	0	0	0	0	0	0	0	0	0	0	1	0	1	1
HOURLY TOTALS																																	
04:00 PM	05:00 PM	0	0	0	0	0	0	0	0	0	0	0	0	0	0	0	0	0	0	0	0	0	0	0	0	0	0	0	0	0	0	0	0
04:15 PM	05:15 PM	0	0	0	0	0	0	0	0	0	0	0	0	0	0	0	0	0	0	0	0	0	0	0	0	0	0	0	0	0	0	0	0
04:30 PM	05:30 PM	0	0	0	0	0	0	0	0	0	0	0	0	0	0	0	0	0	0	0	0	0	0	0	0	0	0	0	0	0	0	0	0
04:45 PM	05:45 PM	0	0	0	0	0	0	0	0	0	0	0	0	0	0	0	0	0	0	0	0	0	0	0	0	0	2	0	0	1	0	3	3
05:00 PM	06:00 PM	0	0	0	0	0	0	0	0	0	0	0	0	0	0	0	0	0	0	0	0	0	0	0	0	0	2	0	0	2	0	4	4

SUMMARY (HOURLY COUNT)

TIME From	TIME To	PEDESTRIAN COUNTS BY LEG* N-END	S-END	E-END	W-END	TOTAL	PEDESTRIAN COUNTS BY DIRECTION* NB	SB	EB	WB	TOTAL	BICYCLE COUNTS NB	SB	EB	WB	TOTAL
04:00 PM	05:00 PM	0	0	0	0	0	0	0	0	0	0	0	0	0	0	0
04:15 PM	05:15 PM	0	0	0	0	0	0	0	0	0	0	0	0	0	0	0
04:30 PM	05:30 PM	0	0	0	0	0	0	0	0	0	0	0	0	0	0	0
04:45 PM	05:45 PM	0	0	0	0	0	0	0	0	0	0	0	0	2	1	3
05:00 PM	06:00 PM	0	0	0	0	0	0	0	0	0	0	0	0	2	2	4

Tel : (510) 232-1271 *Fax: (510) 232-1272*

* Included Jay-Walk

B.A.Y.M.E.T.R.I.C.S.

INTERSECTION TURNING MOVEMENT SUMMARY

PROJECT:	**JUVENILE JUSTICE CENTER TRAFFIC COUNTS**	**SURVEY DATE:**	**7/14/2015**	**DAY:**	**TUESDAY**
N-S APPROACH:	**FAIRMONT DRIVE**	**SURVEY TIME:**	**7:00 AM**	**TO**	**9:00 AM**
E-W APPROACH:	**FOOTHILL BOULEVARD**	**JURISDICTION:**	**ALAMEDA COUNTY**	**FILE:**	**3507085-5AM**

PEAK HOUR

7:45 AM to 8:45 AM

NORTH

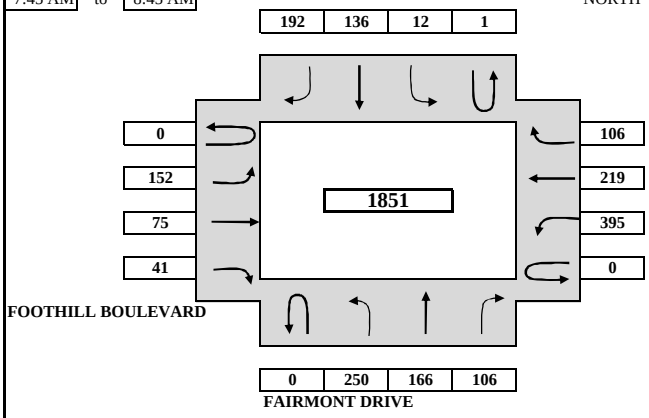

ARRIVAL / DEPARTURE VOLUMES

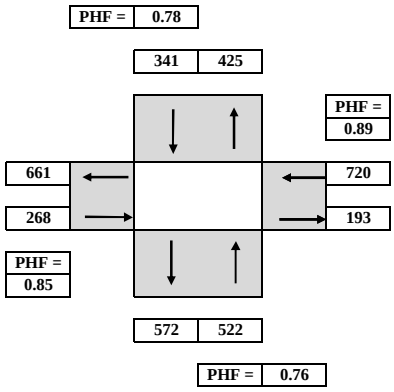

TIME From	PERIOD To	NORTHBOUND U-TURN	NORTHBOUND LEFT	NORTHBOUND THRU	NORTHBOUND RIGHT	SOUTHBOUND U-TURN	SOUTHBOUND LEFT	SOUTHBOUND THRU	SOUTHBOUND RIGHT	EASTBOUND U-TURN	EASTBOUND LEFT	EASTBOUND THRU	EASTBOUND RIGHT	WESTBOUND U-TURN	WESTBOUND LEFT	WESTBOUND THRU	WESTBOUND RIGHT	TOTAL
SURVEY DATA																		
7:00 AM	7:15 AM		52	16	20	0	1	39	39		11	10	17		56	33	8	**302**
7:15 AM	7:30 AM		119	38	43	0	1	60	85		21	18	24		130	87	22	**648**
7:30 AM	7:45 AM		195	69	59	0	4	100	128		39	36	37		237	151	39	**1094**
7:45 AM	8:00 AM		263	110	88	1	7	129	167		93	50	48		342	203	76	**1577**
8:00 AM	8:15 AM		351	167	115	1	9	148	221		133	73	59		452	252	98	**2079**
8:15 AM	8:30 AM		395	197	140	1	11	205	271		161	93	72		523	299	122	**2490**
8:30 AM	8:45 AM		445	235	165	1	16	236	320		191	111	78		632	370	145	**2945**
8:45 AM	9:00 AM		486	283	190	1	22	268	344		218	129	88		732	423	175	**3359**
TOTAL BY PERIOD																		
7:00 AM	7:15 AM	0	52	16	20	0	1	39	39	0	11	10	17	0	56	33	8	**302**
7:15 AM	7:30 AM	0	67	22	23	0	0	21	46	0	10	8	7	0	74	54	14	**346**
7:30 AM	7:45 AM	0	76	31	16	0	3	40	43	0	18	18	13	0	107	64	17	**446**
7:45 AM	8:00 AM	0	68	41	29	1	3	29	39	0	54	14	11	0	105	52	37	**483**
8:00 AM	8:15 AM	0	88	57	27	0	2	19	54	0	40	23	11	0	110	49	22	**502**
8:15 AM	8:30 AM	0	44	30	25	0	2	57	50	0	28	20	13	0	71	47	24	**411**
8:30 AM	8:45 AM	0	50	38	25	0	5	31	49	0	30	18	6	0	109	71	23	**455**
8:45 AM	9:00 AM	0	41	48	25	0	6	32	24	0	27	18	10	0	100	53	30	**414**
HOURLY TOTALS																		
7:00 AM	8:00 AM	0	263	110	88	1	7	129	167	0	93	50	48	0	342	203	76	**1577**
7:15 AM	8:15 AM	0	299	151	95	1	8	109	182	0	122	63	42	0	396	219	90	**1777**
7:30 AM	8:30 AM	0	276	159	97	1	10	145	186	0	140	75	48	0	393	212	100	**1842**
7:45 AM	8:45 AM	0	250	166	106	1	12	136	192	0	152	75	41	0	395	219	106	**1851**
8:00 AM	9:00 AM	0	223	173	102	0	15	139	177	0	125	79	40	0	390	220	99	**1782**

PEAK HOUR SUMMARY

7:45 AM to 8:45 AM	NORTHBOUND NBU	NORTHBOUND NBL	NORTHBOUND NBT	NORTHBOUND NBR	SOUTHBOUND SBU	SOUTHBOUND SBL	SOUTHBOUND SBT	SOUTHBOUND SBR	EASTBOUND EBU	EASTBOUND EBL	EASTBOUND EBT	EASTBOUND EBR	WESTBOUND WBU	WESTBOUND WBL	WESTBOUND WBT	WESTBOUND WBR	TOTAL
VOLUME	0	250	166	106	1	12	136	192	0	152	75	41	0	395	219	106	**1851**
PHF BY MOVEMENT	0.00	0.71	0.73	0.91	0.25	0.60	0.60	0.89	0.00	0.70	0.82	0.79	0.00	0.90	0.77	0.72	OVERALL
PHF BY APPROACH	0.76				0.78				0.85				0.89				**0.92**
BICYCLE (by Direction)	2				1				0				0				**3**
PED (by Direction) *	6				6				3				1				**16**
	NORTH-END				SOUTH-END				EAST-END				WEST-END				
PED (by Leg) *	2				2				8				4				**16**

TEL: (510) 232 - 1271 FAX: (510) 232 - 1272

* Included Jay-Walk

B.A.Y.M.E.T.R.I.C.S.

PEDESTRIAN & BICYCLE MOVEMENT SUMMARY

PROJECT:	**JUVENILE JUSTICE CENTER TRAFFIC COUNTS**	**SURVEY DATE:**	**7/14/2015**	**DAY:**	**TUESDAY**
N-S APPROACH:	**FAIRMONT DRIVE**	**SURVEY PERIOD**	**7:00 AM**	**to**	**9:00 AM**
E-W APPROACH:	**FOOTHILL BOULEVARD**	**JURISDICTION:**	**ALAMEDA COUNTY**	**FILE:**	**3507085-5AM**

PEAK HOUR SUMMARY

PEAK HOUR 07:45 AM TO 08:45 AM

PEDESTRIAN | **BICYCLE**

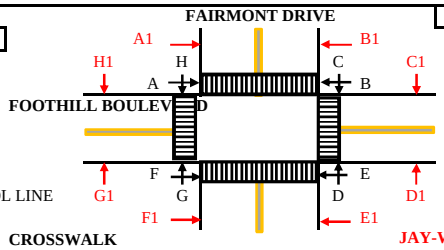

LEGEND:
- CROSSWALK
- SIDEWALK
- STOP CONTROL LINE

CROSSWALK — **JAY-WALK (in RED)**

A	B	BY LEG N-END	BY DIR NB(D+G)	BY DIR NB(D1+G1)	BY LEG N-END	A1	B1
2	0	2	6	0	0	0	0
C	D	E-END	SB(C+H)	SB(C1+H1)	E-END	C1	D1
4	4	8	6	0	0	0	0
E	F	S-END	EB(A+F)	EB(A1+F1)	S-END	E1	F1
1	1	2	3	0	0	0	0
G	H	W-END	WB(B+E)	WB(B1+E1)	W-END	G1	H1
2	2	4	1	0	0	0	0

TOTAL PEDESTRIAN 16 — **TOTAL JAY-WALK** 0

TOTAL PEDESTRIAN (Inclded JAY-WALK) 16

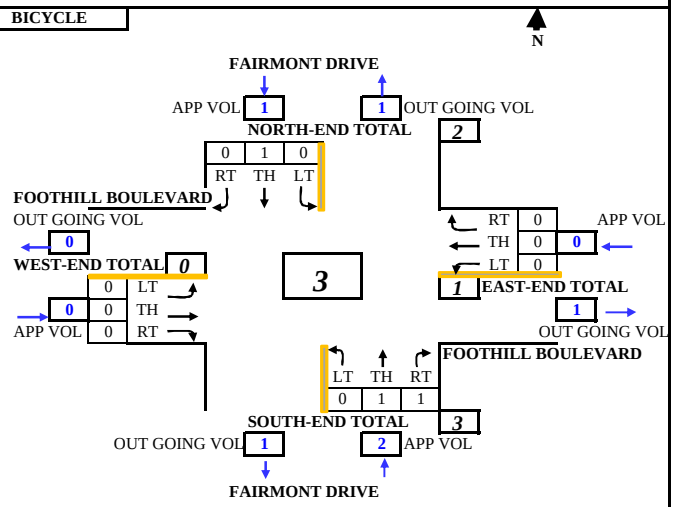

SURVEY DATA

TIME From	To	PEDESTRIAN @ CROSSWALK / STOP LINE N-END A	N-END B	E-END C	E-END D	S-END E	S-END F	W-END G	W-END H	TOTAL	JAY-WALK (From Intersection to Midblock) N-END A1	N-END B1	E-END C1	E-END D1	S-END E1	S-END F1	W-END G1	W-END H1	TOTAL	BICYCLE NB SOUTH-END LT	NB TH	NB RT	SB NORTH-END LT	SB TH	SB RT	EB WEST-END LT	EB TH	EB RT	WB EAST-END LT	WB TH	WB RT	TOTAL	OVER ALL TOTAL
07:00 AM	07:15 AM	2	0	2	0	0	0	1	0		0	0	0	0	0	0	0	0		0	1	0	0	0	0	0	0	0	0	0	0		6
07:15 AM	07:30 AM	2	0	3	1	0	0	1	0		0	0	0	0	0	0	0	0		0	1	1	0	0	0	0	0	0	0	0	0		9
07:30 AM	07:45 AM	2	0	4	1	0	0	1	0		0	0	1	0	0	0	0	0		0	1	1	0	0	0	0	0	0	0	0	0		11
07:45 AM	08:00 AM	2	0	5	1	0	0	1	0		0	0	1	0	0	0	0	0		0	1	1	0	0	0	0	0	0	0	0	0		12
08:00 AM	08:15 AM	3	0	5	2	0	0	1	0		0	0	1	0	0	0	0	0		0	1	1	0	1	0	0	0	0	0	0	0		15
08:15 AM	08:30 AM	4	0	7	3	0	1	2	2		0	0	1	0	0	0	0	0		0	2	1	0	1	0	0	0	0	0	0	0		24
08:30 AM	08:45 AM	4	0	8	5	1	1	3	2		0	0	1	0	0	0	0	0		0	2	2	0	1	0	0	0	0	0	0	0		30
08:45 AM	09:00 AM	4	0	9	6	1	1	3	2		0	0	1	0	0	0	0	0		0	3	2	0	1	0	0	0	1	0	0	0		34

TOTAL BY PERIOD

TIME From	To	PEDESTRIAN A	B	C	D	E	F	G	H	TOTAL	A1	B1	C1	D1	E1	F1	G1	H1	TOTAL	NB LT	NB TH	NB RT	SB LT	SB TH	SB RT	EB LT	EB TH	EB RT	WB LT	WB TH	WB RT	TOTAL	OVER ALL TOTAL
07:00 AM	07:15 AM	2	0	2	0	0	0	1	0	5	0	0	0	0	0	0	0	0	0	0	1	0	0	0	0	0	0	0	0	0	0	1	6
07:15 AM	07:30 AM	0	0	1	1	0	0	0	0	2	0	0	0	0	0	0	0	0	0	0	0	1	0	0	0	0	0	0	0	0	0	1	3
07:30 AM	07:45 AM	0	0	1	0	0	0	0	0	1	0	0	1	0	0	0	0	0	1	0	0	0	0	0	0	0	0	0	0	0	0	0	2
07:45 AM	08:00 AM	0	0	1	0	0	0	0	0	1	0	0	0	0	0	0	0	0	0	0	0	0	0	0	0	0	0	0	0	0	0	0	1
08:00 AM	08:15 AM	1	0	0	1	0	0	0	0	2	0	0	0	0	0	0	0	0	0	0	0	0	0	1	0	0	0	0	0	0	0	1	3
08:15 AM	08:30 AM	1	0	2	1	0	1	1	2	8	0	0	0	0	0	0	0	0	0	0	1	0	0	0	0	0	0	0	0	0	0	1	9
08:30 AM	08:45 AM	0	0	1	2	1	0	1	0	5	0	0	0	0	0	0	0	0	0	0	0	1	0	0	0	0	0	0	0	0	0	1	6
08:45 AM	09:00 AM	0	0	1	1	0	0	0	0	2	0	0	0	0	0	0	0	0	0	0	1	0	0	0	0	0	0	1	0	0	0	2	4

HOURLY TOTALS

TIME From	To	PEDESTRIAN A	B	C	D	E	F	G	H	TOTAL	A1	B1	C1	D1	E1	F1	G1	H1	TOTAL	NB LT	NB TH	NB RT	SB LT	SB TH	SB RT	EB LT	EB TH	EB RT	WB LT	WB TH	WB RT	TOTAL	OVER ALL TOTAL
07:00 AM	08:00 AM	2	0	5	1	0	0	1	0	9	0	0	1	0	0	0	0	0	1	0	1	1	0	0	0	0	0	0	0	0	0	2	12
07:15 AM	08:15 AM	1	0	3	2	0	0	0	0	6	0	0	1	0	0	0	0	0	1	0	0	1	0	1	0	0	0	0	0	0	0	2	9
07:30 AM	08:30 AM	2	0	4	2	0	1	1	2	12	0	0	1	0	0	0	0	0	1	0	1	0	0	1	0	0	0	0	0	0	0	2	15
07:45 AM	08:45 AM	2	0	4	4	1	1	2	2	16	0	0	0	0	0	0	0	0	0	0	1	1	0	1	0	0	0	0	0	0	0	3	19
08:00 AM	09:00 AM	2	0	4	5	1	1	2	2	17	0	0	0	0	0	0	0	0	0	0	2	1	0	1	0	0	0	1	0	0	0	5	22

SUMMARY (HOURLY COUNT)

TIME From	To	PEDESTRIAN COUNTS BY LEG* N-END	S-END	E-END	W-END	TOTAL	PEDESTRIAN COUNTS BY DIRECTION* NB	SB	EB	WB	TOTAL	BICYCLE COUNTS NB	SB	EB	WB	TOTAL
07:00 AM	08:00 AM	2	0	7	1	10	2	6	2	0	10	2	0	0	0	2
07:15 AM	08:15 AM	1	0	6	0	7	2	4	1	0	7	1	1	0	0	2
07:30 AM	08:30 AM	2	1	7	3	13	3	7	3	0	13	1	1	0	0	2
07:45 AM	08:45 AM	2	2	8	4	16	6	6	3	1	16	2	1	0	0	3
08:00 AM	09:00 AM	2	2	9	4	17	7	6	3	1	17	3	1	1	0	5

Tel : (510) 232-1271 *Fax: (510) 232-1272*

* Included Jay-Walk

B.A.Y.M.E.T.R.I.C.S.

INTERSECTION TURNING MOVEMENT SUMMARY

PROJECT:	**JUVENILE JUSTICE CENTER TRAFFIC COUNTS**	**SURVEY DATE:**	**7/14/2015**	**DAY:**	**TUESDAY**
N-S APPROACH:	**FAIRMONT DRIVE**	**SURVEY TIME:**	**4:00 PM**	**TO**	**6:00 PM**
E-W APPROACH:	**FOOTHILL BOULEVARD**	**JURISDICTION:**	**ALAMEDA COUNTY**	**FILE:**	**3507085-5PM**

PEAK HOUR

5:00 PM to 6:00 PM

NORTH

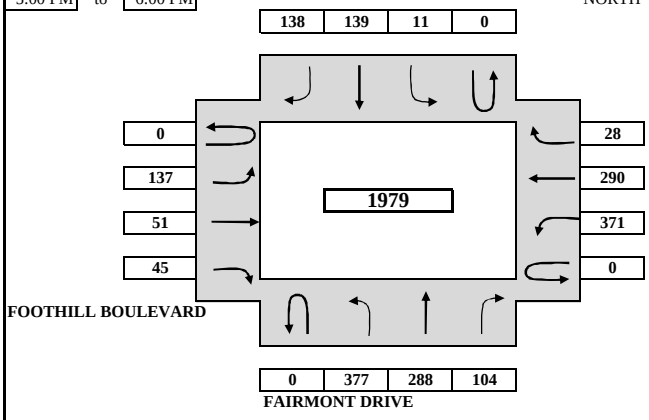

ARRIVAL / DEPARTURE VOLUMES

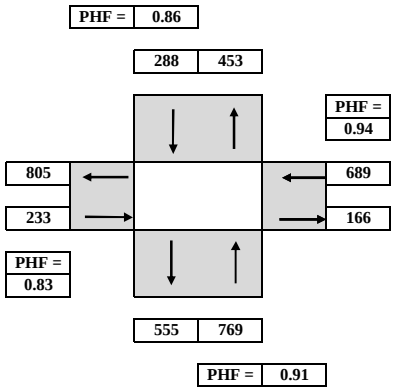

TIME PERIOD From	To	NORTHBOUND U-TURN	LEFT	THRU	RIGHT	SOUTHBOUND U-TURN	LEFT	THRU	RIGHT	EASTBOUND U-TURN	LEFT	THRU	RIGHT	WESTBOUND U-TURN	LEFT	THRU	RIGHT	TOTAL
SURVEY DATA																		
4:00 PM	4:15 PM		77	49	30		2	41	41		20	11	6		84	61	10	**432**
4:15 PM	4:30 PM		154	104	78		3	74	74		46	21	12		179	138	21	**904**
4:30 PM	4:45 PM		250	158	82		5	129	116		68	34	21		280	233	27	**1403**
4:45 PM	5:00 PM		343	208	113		8	172	138		93	47	30		351	306	38	**1847**
5:00 PM	5:15 PM		432	279	134		10	205	179		129	59	42		454	385	40	**2348**
5:15 PM	5:30 PM		541	357	159		11	230	212		173	75	52		552	450	50	**2862**
5:30 PM	5:45 PM		616	428	188		15	271	251		199	84	61		654	511	56	**3334**
5:45 PM	6:00 PM		720	496	217		19	311	276		230	98	75		722	596	66	**3826**
TOTAL BY PERIOD																		
4:00 PM	4:15 PM	0	77	49	30	0	2	41	41	0	20	11	6	0	84	61	10	**432**
4:15 PM	4:30 PM	0	77	55	48	0	1	33	33	0	26	10	6	0	95	77	11	**472**
4:30 PM	4:45 PM	0	96	54	4	0	2	55	42	0	22	13	9	0	101	95	6	**499**
4:45 PM	5:00 PM	0	93	50	31	0	3	43	22	0	25	13	9	0	71	73	11	**444**
5:00 PM	5:15 PM	0	89	71	21	0	2	33	41	0	36	12	12	0	103	79	2	**501**
5:15 PM	5:30 PM	0	109	78	25	0	1	25	33	0	44	16	10	0	98	65	10	**514**
5:30 PM	5:45 PM	0	75	71	29	0	4	41	39	0	26	9	9	0	102	61	6	**472**
5:45 PM	6:00 PM	0	104	68	29	0	4	40	25	0	31	14	14	0	68	85	10	**492**
HOURLY TOTALS																		
4:00 PM	5:00 PM	0	343	208	113	0	8	172	138	0	93	47	30	0	351	306	38	**1847**
4:15 PM	5:15 PM	0	355	230	104	0	8	164	138	0	109	48	36	0	370	324	30	**1916**
4:30 PM	5:30 PM	0	387	253	81	0	8	156	138	0	127	54	40	0	373	312	29	**1958**
4:45 PM	5:45 PM	0	366	270	106	0	10	142	135	0	131	50	40	0	374	278	29	**1931**
5:00 PM	6:00 PM	0	377	288	104	0	11	139	138	0	137	51	45	0	371	290	28	**1979**

PEAK HOUR SUMMARY

5:00 PM to 6:00 PM	NORTHBOUND NBU	NBL	NBT	NBR	SOUTHBOUND SBU	SBL	SBT	SBR	EASTBOUND EBU	EBL	EBT	EBR	WESTBOUND WBU	WBL	WBT	WBR	TOTAL
VOLUME	0	377	288	104	0	11	139	138	0	137	51	45	0	371	290	28	**1979**
PHF BY MOVEMENT	0.00	0.86	0.92	0.90	0.00	0.69	0.85	0.84	0.00	0.78	0.80	0.80	0.00	0.90	0.85	0.70	OVERALL
PHF BY APPROACH	0.91				0.86				0.83				0.94				**0.96**
BICYCLE (by Direction)	1				2				4				2				**9**
PED (by Direction) *	4				2				1				2				**9**
	NORTH-END				SOUTH-END				EAST-END				WEST-END				
PED (by Leg) *	3				0				4				2				**9**

TEL: (510) 232 - 1271 FAX: (510) 232 - 1272

* Included Jay-Walk

B.A.Y.M.E.T.R.I.C.S.

PEDESTRIAN & BICYCLE MOVEMENT SUMMARY

PROJECT:	**JUVENILE JUSTICE CENTER TRAFFIC COUNTS**	**SURVEY DATE:**	**7/14/2015**	**DAY:**	**TUESDAY**
N-S APPROACH:	**FAIRMONT DRIVE**	**SURVEY PERIOD**	**4:00 PM**	**to**	**6:00 PM**
E-W APPROACH:	**FOOTHILL BOULEVARD**	**JURISDICTION:**	**ALAMEDA COUNTY**	**FILE:**	**=S6**

PEAK HOUR SUMMARY

PEAK HOUR: 05:00 PM TO 06:00 PM

PEDESTRIAN | **BICYCLE**

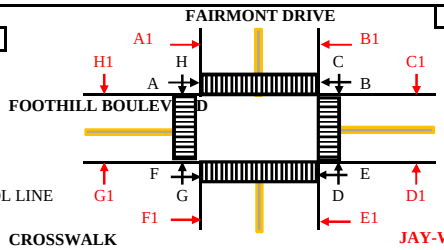

LEGEND:
- CROSSWALK
- SIDEWALK
- STOP CONTROL LINE

CROSSWALK — **JAY-WALK (in RED)**

A	B	BY LEG N-END	BY DIR NB(D+G)	BY DIR NB(D1+G1)	BY LEG N-END	A1	B1
1	2	3	4	0	0	0	0
C	D	E-END	SB(C+H)	SB(C1+H1)	E-END	C1	D1
2	2	4	2	0	0	0	0
E	F	S-END	EB(A+F)	EB(A1+F1)	S-END	E1	F1
0	0	0	1	0	0	0	0
G	H	W-END	WB(B+E)	WB(B1+E1)	W-END	G1	H1
2	0	2	2	0	0	0	0

TOTAL PEDESTRIAN 9 — **TOTAL JAY-WALK** 0

TOTAL PEDESTRIAN (Inclded JAY-WALK) 9

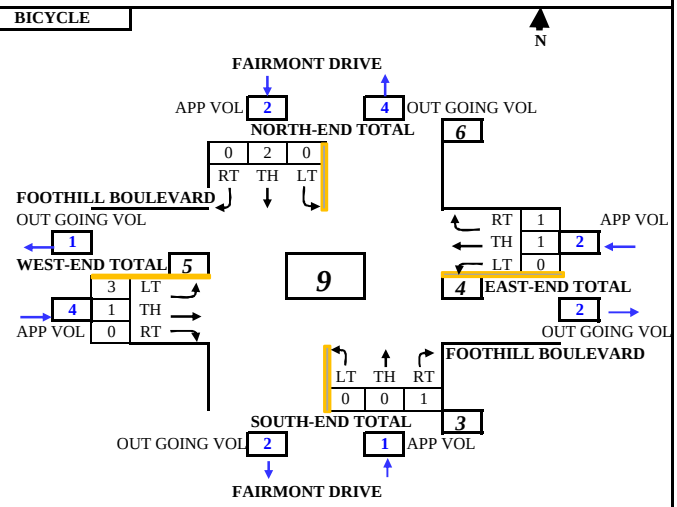

TIME From	To	PEDESTRIAN @ CROSSWALK / STOP LINE N-END A	B	E-END C	D	S-END E	F	W-END G	H	TOTAL	JAY-WALK (From Intersection to Midblock) N-END A1	B1	E-END C1	D1	S-END E1	F1	W-END G1	H1	TOTAL	BICYCLE NB SOUTH-END LT	TH	RT	SB NORTH-END LT	TH	RT	EB WEST-END LT	TH	RT	WB EAST-END LT	TH	RT	TOTAL	OVER ALL TOTAL
SURVEY DATA																																		
04:00 PM	04:15 PM	0	0	0	0	0	0	0	0		0	0	0	0	0	0	0	0		0	0	0	0	0	0	0	0	0	0	0	0	0		0
04:15 PM	04:30 PM	0	0	0	1	0	0	0	1		0	0	0	0	0	0	0	0		0	0	0	0	0	0	0	0	0	0	0	0	0		2
04:30 PM	04:45 PM	3	0	0	1	0	0	2	1		0	0	0	0	0	0	0	0		0	0	0	0	0	0	0	0	0	0	0	0	0		7
04:45 PM	05:00 PM	3	0	1	2	0	0	2	1		0	0	0	0	0	0	0	0		0	0	0	0	0	0	0	0	0	0	0	0	0		9
05:00 PM	05:15 PM	3	0	2	2	0	0	2	1		0	0	0	0	0	0	0	0		0	0	0	0	2	0	0	0	0	0	0	0	0		12
05:15 PM	05:30 PM	3	0	2	2	0	0	3	1		0	0	0	0	0	0	0	0		0	0	0	0	2	0	0	0	0	0	0	0	0		13
05:30 PM	05:45 PM	3	0	2	2	0	0	3	1		0	0	0	0	0	0	0	0		0	0	1	0	2	0	3	1	0	0	0	1	0		19
05:45 PM	06:00 PM	4	2	3	4	0	0	4	1		0	0	0	0	0	0	0	0		0	0	1	0	2	0	3	1	0	0	1	1	0		27
TOTAL BY PERIOD																																		
04:00 PM	04:15 PM	0	0	0	0	0	0	0	0	0	0	0	0	0	0	0	0	0	0	0	0	0	0	0	0	0	0	0	0	0	0	0	0	0
04:15 PM	04:30 PM	0	0	0	1	0	0	0	1	2	0	0	0	0	0	0	0	0	0	0	0	0	0	0	0	0	0	0	0	0	0	0	0	2
04:30 PM	04:45 PM	3	0	0	0	0	0	2	0	5	0	0	0	0	0	0	0	0	0	0	0	0	0	0	0	0	0	0	0	0	0	0	0	5
04:45 PM	05:00 PM	0	0	1	1	0	0	0	0	2	0	0	0	0	0	0	0	0	0	0	0	0	0	0	0	0	0	0	0	0	0	0	0	2
05:00 PM	05:15 PM	0	0	1	0	0	0	0	0	1	0	0	0	0	0	0	0	0	0	0	0	0	0	2	0	0	0	0	0	0	0	2	3
05:15 PM	05:30 PM	0	0	0	0	0	0	1	0	1	0	0	0	0	0	0	0	0	0	0	0	0	0	0	0	0	0	0	0	0	0	0	1
05:30 PM	05:45 PM	0	0	0	0	0	0	0	0	0	0	0	0	0	0	0	0	0	0	0	0	1	0	0	0	3	1	0	0	0	1	6	6
05:45 PM	06:00 PM	1	2	1	2	0	0	1	0	7	0	0	0	0	0	0	0	0	0	0	0	0	0	0	0	0	0	0	0	1	0	1	8
HOURLY TOTALS																																		
04:00 PM	05:00 PM	3	0	1	2	0	0	2	1	9	0	0	0	0	0	0	0	0	0	0	0	0	0	0	0	0	0	0	0	0	0	0	9
04:15 PM	05:15 PM	3	0	2	2	0	0	2	1	10	0	0	0	0	0	0	0	0	0	0	0	0	0	2	0	0	0	0	0	0	0	2	12
04:30 PM	05:30 PM	3	0	2	1	0	0	3	0	9	0	0	0	0	0	0	0	0	0	0	0	0	0	2	0	0	0	0	0	0	0	2	11
04:45 PM	05:45 PM	0	0	2	1	0	0	1	0	4	0	0	0	0	0	0	0	0	0	0	0	1	0	2	0	3	1	0	0	0	1	8	12
05:00 PM	06:00 PM	1	2	2	2	0	0	2	0	9	0	0	0	0	0	0	0	0	0	0	0	1	0	2	0	3	1	0	0	1	1	9	18

SUMMARY (HOURLY COUNT)

TIME From	To	PEDESTRIAN COUNTS BY LEG* N-END	S-END	E-END	W-END	TOTAL	PEDESTRIAN COUNTS BY DIRECTION* NB	SB	EB	WB	TOTAL	BICYCLE COUNTS NB	SB	EB	WB	TOTAL
04:00 PM	05:00 PM	3	0	3	3	**9**	4	2	3	0	***9***	0	0	0	0	***0***
04:15 PM	05:15 PM	3	0	4	3	**10**	4	3	3	0	***10***	0	2	0	0	***2***
04:30 PM	05:30 PM	3	0	3	3	**9**	4	2	3	0	***9***	0	2	0	0	***2***
04:45 PM	05:45 PM	0	0	3	1	**4**	2	2	0	0	***4***	1	2	4	1	***8***
05:00 PM	06:00 PM	3	0	4	2	**9**	4	2	1	2	***9***	1	2	4	2	***9***

Tel : (510) 232-1271 ***Fax: (510) 232-1272***

* Included Jay-Walk

B.A.Y.M.E.T.R.I.C.S.

INTERSECTION TURNING MOVEMENT SUMMARY

PROJECT:	**JUVENILE JUSTICE CENTER TRAFFIC COUNTS**	**SURVEY DATE:**	**7/14/2015**	**DAY:**	**TUESDAY**
N-S APPROACH:	**FAIRMONT DRIVE**	**SURVEY TIME:**	**7:00 AM**	**TO**	**9:00 AM**
E-W APPROACH:	**E. 14TH STREET**	**JURISDICTION:**	**ALAMEDA COUNTY**	**FILE:**	**3507085-6AM**

PEAK HOUR

7:30 AM to 8:30 AM

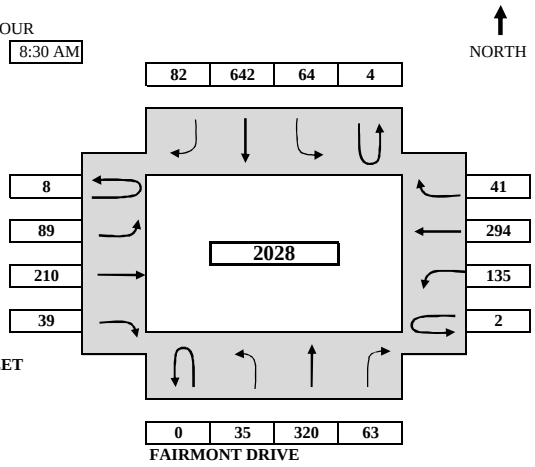

ARRIVAL / DEPARTURE VOLUMES

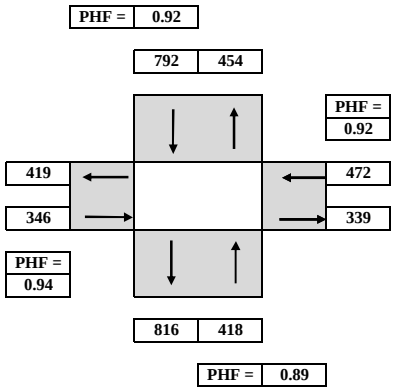

TIME PERIOD From	To	NORTHBOUND U-TURN	LEFT	THRU	RIGHT	SOUTHBOUND U-TURN	LEFT	THRU	RIGHT	EASTBOUND U-TURN	LEFT	THRU	RIGHT	WESTBOUND U-TURN	LEFT	THRU	RIGHT	TOTAL
SURVEY DATA																		
7:00 AM	7:15 AM	0	5	65	8	0	19	110	10	0	8	30	5	1	15	51	13	**340**
7:15 AM	7:30 AM	1	7	126	15	0	31	201	29	0	21	68	7	2	36	103	26	**673**
7:30 AM	7:45 AM	1	12	206	35	2	43	360	46	1	40	121	13	2	68	188	37	**1175**
7:45 AM	8:00 AM	1	21	291	44	3	52	544	67	1	61	174	25	3	108	259	43	**1697**
8:00 AM	8:15 AM	1	35	377	62	4	83	695	86	5	87	226	32	3	135	329	58	**2218**
8:15 AM	8:30 AM	1	42	446	78	4	95	843	111	8	110	278	46	4	171	397	67	**2701**
8:30 AM	8:45 AM	1	50	517	98	7	124	945	129	10	137	347	59	6	194	485	79	**3188**
8:45 AM	9:00 AM	1	62	587	111	7	146	1068	160	12	155	404	73	7	217	567	91	**3668**
TOTAL BY PERIOD																		
7:00 AM	7:15 AM	0	5	65	8	0	19	110	10	0	8	30	5	1	15	51	13	**340**
7:15 AM	7:30 AM	1	2	61	7	0	12	91	19	0	13	38	2	1	21	52	13	**333**
7:30 AM	7:45 AM	0	5	80	20	2	12	159	17	1	19	53	6	0	32	85	11	**502**
7:45 AM	8:00 AM	0	9	85	9	1	9	184	21	0	21	53	12	1	40	71	6	**522**
8:00 AM	8:15 AM	0	14	86	18	1	31	151	19	4	26	52	7	0	27	70	15	**521**
8:15 AM	8:30 AM	0	7	69	16	0	12	148	25	3	23	52	14	1	36	68	9	**483**
8:30 AM	8:45 AM	0	8	71	20	3	29	102	18	2	27	69	13	2	23	88	12	**487**
8:45 AM	9:00 AM	0	12	70	13	0	22	123	31	2	18	57	14	1	23	82	12	**480**
HOURLY TOTALS																		
7:00 AM	8:00 AM	1	21	291	44	3	52	544	67	1	61	174	25	3	108	259	43	**1697**
7:15 AM	8:15 AM	1	30	312	54	4	64	585	76	5	79	196	27	2	120	278	45	**1878**
7:30 AM	8:30 AM	0	35	320	63	4	64	642	82	8	89	210	39	2	135	294	41	**2028**
7:45 AM	8:45 AM	0	38	311	63	5	81	585	83	9	97	226	46	4	126	297	42	**2013**
8:00 AM	9:00 AM	0	41	296	67	4	94	524	93	11	94	230	48	4	109	308	48	**1971**

PEAK HOUR SUMMARY

7:30 AM to 8:30 AM	NORTHBOUND NBU	NBL	NBT	NBR	SOUTHBOUND SBU	SBL	SBT	SBR	EASTBOUND EBU	EBL	EBT	EBR	WESTBOUND WBU	WBL	WBT	WBR	TOTAL
VOLUME	0	35	320	63	4	64	642	82	8	89	210	39	2	135	294	41	**2028**
PHF BY MOVEMENT	0.00	0.63	0.93	0.79	0.50	0.52	0.87	0.82	0.50	0.86	0.99	0.70	0.50	0.84	0.86	0.68	OVERALL
PHF BY APPROACH	0.89				0.92				0.94				0.92				**0.97**
BICYCLE (by Direction)	1				0				1				0				**2**
PED (by Direction) *	9				14				11				9				**43**
	NORTH-END				SOUTH-END				EAST-END				WEST-END				
PED (by Leg) *	7				13				7				16				**43**

TEL: (510) 232 - 1271 FAX: (510) 232 - 1272

* Included Jay-Walk

B.A.Y.M.E.T.R.I.C.S.

PEDESTRIAN & BICYCLE MOVEMENT SUMMARY

PROJECT:	**JUVENILE JUSTICE CENTER TRAFFIC COUNTS**	**SURVEY DATE:**	**7/14/2015**	**DAY:**	**TUESDAY**
N-S APPROACH:	**FAIRMONT DRIVE**	**SURVEY PERIOD**	**7:00 AM**	**to**	**9:00 AM**
E-W APPROACH:	**E. 14TH STREET**	**JURISDICTION:**	**ALAMEDA COUNTY**	**FILE:**	**3507085-6AM**

PEAK HOUR SUMMARY

PEAK HOUR: 07:30 AM TO 08:30 AM

PEDESTRIAN | **BICYCLE**

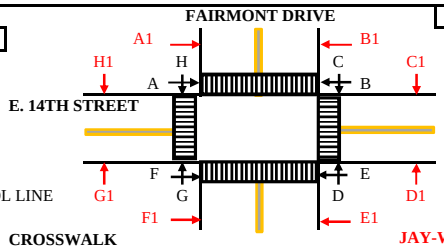

LEGEND:
- CROSSWALK
- SIDEWALK
- STOP CONTROL LINE

CROSSWALK — **JAY-WALK (in RED)**

A	B	BY LEG N-END	BY DIR NB(D+G)	BY DIR NB(D1+G1)	BY LEG N-END	A1	B1
1	6	7	8	1	0	0	0
C	**D**	**E-END**	**SB(C+H)**	**SB(C1+H1)**	**E-END**	**C1**	**D1**
3	4	7	12	2	0	0	0
E	**F**	**S-END**	**EB(A+F)**	**EB(A1+F1)**	**S-END**	**E1**	**F1**
3	10	13	11	0	0	0	0
G	**H**	**W-END**	**WB(B+E)**	**WB(B1+E1)**	**W-END**	**G1**	**H1**
4	9	13	9	0	3	1	2

TOTAL PEDESTIAN 40 — **TOTAL JAY-WALK** 3

TOTAL PEDESTIAN (Inclded JAY-WALK) 43

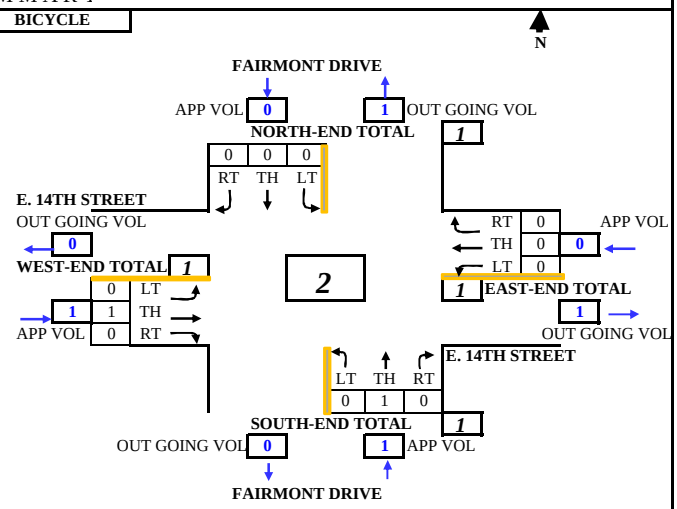

SURVEY DATA

TIME From	To	PEDESTRIAN @ CROSSWALK / STOP LINE N-END A	N-END B	E-END C	E-END D	S-END E	S-END F	W-END G	W-END H	TOTAL	JAY-WALK (From Intersection to Midblock) N-END A1	N-END B1	E-END C1	E-END D1	S-END E1	S-END F1	W-END G1	W-END H1	TOTAL	BICYCLE NB SOUTH-END LT	NB TH	NB RT	SB NORTH-END LT	SB TH	SB RT	EB WEST-END LT	EB TH	EB RT	WB EAST-END LT	WB TH	WB RT	TOTAL	OVER ALL TOTAL
07:00 AM	07:15 AM	1	3	2	1	0	3	0	2		0	0	0	0	0	0	0	0		0	0	0	0	0	0	0	0	0	0	0	0		12
07:15 AM	07:30 AM	6	3	3	3	1	4	2	4		0	0	0	0	0	0	0	0		0	0	0	0	0	0	0	0	0	0	1	0		27
07:30 AM	07:45 AM	7	3	4	4	2	6	2	6		0	0	0	0	0	0	0	1		0	0	0	0	0	0	0	0	0	0	1	0		36
07:45 AM	08:00 AM	7	5	4	5	2	9	3	6		0	0	0	0	0	0	0	2		0	0	0	0	0	0	0	0	0	0	1	0		44
08:00 AM	08:15 AM	7	7	5	7	3	13	6	10		0	0	0	0	0	0	0	2		0	0	0	0	0	0	0	1	0	0	1	0		62
08:15 AM	08:30 AM	7	9	6	7	4	14	6	13		0	0	0	0	0	0	1	2		0	1	0	0	0	0	0	1	0	0	1	0		72
08:30 AM	08:45 AM	9	10	10	9	7	15	8	14		0	0	2	0	0	0	1	2		0	2	0	0	0	0	0	2	0	0	1	0		92
08:45 AM	09:00 AM	9	11	11	10	10	17	8	14		0	0	2	0	0	0	1	2		0	3	0	0	0	0	0	2	0	0	1	0		101

TOTAL BY PERIOD

TIME From	To	N-END A	N-END B	E-END C	E-END D	S-END E	S-END F	W-END G	W-END H	TOTAL	N-END A1	N-END B1	E-END C1	E-END D1	S-END E1	S-END F1	W-END G1	W-END H1	TOTAL	NB SOUTH-END LT	NB TH	NB RT	SB NORTH-END LT	SB TH	SB RT	EB WEST-END LT	EB TH	EB RT	WB EAST-END LT	WB TH	WB RT	TOTAL	OVER ALL TOTAL
07:00 AM	07:15 AM	1	3	2	1	0	3	0	2	12	0	0	0	0	0	0	0	0	0	0	0	0	0	0	0	0	0	0	0	0	0	0	12
07:15 AM	07:30 AM	5	0	1	2	1	1	2	2	14	0	0	0	0	0	0	0	0	0	0	0	0	0	0	0	0	0	0	0	1	0	1	15
07:30 AM	07:45 AM	1	0	1	1	1	2	0	2	8	0	0	0	0	0	0	0	1	1	0	0	0	0	0	0	0	0	0	0	0	0	0	9
07:45 AM	08:00 AM	0	2	0	1	0	3	1	0	7	0	0	0	0	0	0	0	1	1	0	0	0	0	0	0	0	0	0	0	0	0	0	8
08:00 AM	08:15 AM	0	2	1	2	1	4	3	4	17	0	0	0	0	0	0	0	0	0	0	0	0	0	0	0	0	1	0	0	0	0	1	18
08:15 AM	08:30 AM	0	2	1	0	1	1	0	3	8	0	0	0	0	0	0	1	0	1	0	1	0	0	0	0	0	0	0	0	0	0	1	10
08:30 AM	08:45 AM	2	1	4	2	3	1	2	1	16	0	0	2	0	0	0	0	0	2	0	1	0	0	0	0	0	1	0	0	0	0	2	20
08:45 AM	09:00 AM	0	1	1	1	3	2	0	0	8	0	0	0	0	0	0	0	0	0	0	1	0	0	0	0	0	0	0	0	0	0	1	9

HOURLY TOTALS

TIME From	To	N-END A	N-END B	E-END C	E-END D	S-END E	S-END F	W-END G	W-END H	TOTAL	N-END A1	N-END B1	E-END C1	E-END D1	S-END E1	S-END F1	W-END G1	W-END H1	TOTAL	NB SOUTH-END LT	NB TH	NB RT	SB NORTH-END LT	SB TH	SB RT	EB WEST-END LT	EB TH	EB RT	WB EAST-END LT	WB TH	WB RT	TOTAL	OVER ALL TOTAL
07:00 AM	08:00 AM	7	5	4	5	2	9	3	6	41	0	0	0	0	0	0	0	2	2	0	0	0	0	0	0	0	0	0	0	1	0	1	44
07:15 AM	08:15 AM	6	4	3	6	3	10	6	8	46	0	0	0	0	0	0	0	2	2	0	0	0	0	0	0	0	1	0	0	1	0	2	50
07:30 AM	08:30 AM	1	6	3	4	3	10	4	9	40	0	0	0	0	0	0	1	2	3	0	1	0	0	0	0	0	1	0	0	0	0	2	45
07:45 AM	08:45 AM	2	7	6	5	5	9	6	8	48	0	0	2	0	0	0	1	1	4	0	2	0	0	0	0	0	2	0	0	0	0	4	56
08:00 AM	09:00 AM	2	6	7	5	8	8	5	8	49	0	0	2	0	0	0	1	0	3	0	3	0	0	0	0	0	2	0	0	0	0	5	57

SUMMARY (HOURLY COUNT)

TIME From	To	PEDESTRIAN COUNTS BY LEG* N-END	S-END	E-END	W-END	TOTAL	PEDESTRIAN COUNTS BY DIRECTION* NB	SB	EB	WB	TOTAL	BICYCLE COUNTS NB	SB	EB	WB	TOTAL
07:00 AM	08:00 AM	12	11	9	11	43	8	12	16	7	43	0	0	0	1	1
07:15 AM	08:15 AM	10	13	9	16	48	12	13	16	7	48	0	0	1	1	2
07:30 AM	08:30 AM	7	13	7	16	43	9	14	11	9	43	1	0	1	0	2
07:45 AM	08:45 AM	9	14	13	16	52	12	17	11	12	52	2	0	2	0	4
08:00 AM	09:00 AM	8	16	14	14	52	11	17	10	14	52	3	0	2	0	5

Tel : (510) 232-1271 *Fax: (510) 232-1272*

* Included Jay-Walk

B.A.Y.M.E.T.R.I.C.S.

INTERSECTION TURNING MOVEMENT SUMMARY

PROJECT:	**JUVENILE JUSTICE CENTER TRAFFIC COUNTS**	**SURVEY DATE:**	**7/14/2015**	**DAY:**	**TUESDAY**
N-S APPROACH:	**FAIRMONT DRIVE**	**SURVEY TIME:**	**4:00 PM**	**TO**	**6:00 PM**
E-W APPROACH:	**E. 14TH STREET**	**JURISDICTION:**	**ALAMEDA COUNTY**	**FILE:**	**3507085-6PM**

PEAK HOUR

4:45 PM to 5:45 PM

NORTH

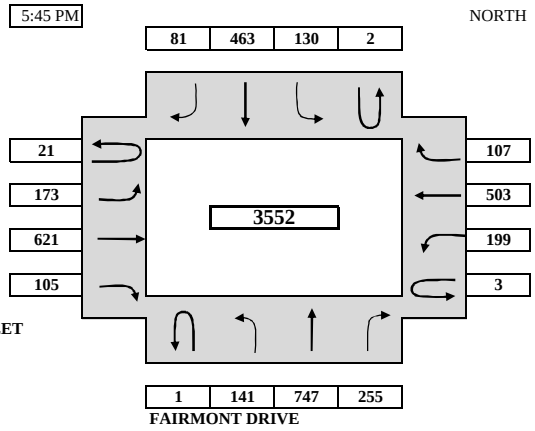

ARRIVAL / DEPARTURE VOLUMES

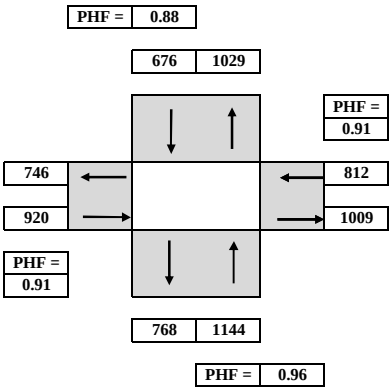

TIME From		PERIOD To	NORTHBOUND U-TURN	NORTHBOUND LEFT	NORTHBOUND THRU	NORTHBOUND RIGHT	SOUTHBOUND U-TURN	SOUTHBOUND LEFT	SOUTHBOUND THRU	SOUTHBOUND RIGHT	EASTBOUND U-TURN	EASTBOUND LEFT	EASTBOUND THRU	EASTBOUND RIGHT	WESTBOUND U-TURN	WESTBOUND LEFT	WESTBOUND THRU	WESTBOUND RIGHT	TOTAL
SURVEY DATA																			
4:00 PM	to	4:15 PM	1	36	167	60	2	17	90	17	3	36	158	14	0	52	107	20	**780**
4:15 PM	to	4:30 PM	1	62	335	120	3	44	200	36	8	81	331	39	1	93	194	43	**1591**
4:30 PM	to	4:45 PM	1	112	499	165	5	77	346	61	14	128	478	63	7	140	301	61	**2458**
4:45 PM	to	5:00 PM	1	142	687	237	6	106	445	85	21	163	628	87	7	204	428	92	**3339**
5:00 PM	to	5:15 PM	1	176	892	296	6	138	550	106	31	208	777	107	5	264	555	119	**4231**
5:15 PM	to	5:30 PM	1	211	1065	363	6	163	679	126	33	251	936	131	8	309	687	152	**5121**
5:30 PM	to	5:45 PM	2	253	1246	420	7	207	809	142	35	301	1099	168	10	339	804	168	**6010**
5:45 PM	to	6:00 PM	3	290	1431	469	10	248	925	153	38	338	1245	204	10	386	904	194	**6848**
TOTAL BY PERIOD																			
4:00 PM	to	4:15 PM	1	36	167	60	2	17	90	17	3	36	158	14	0	52	107	20	**780**
4:15 PM	to	4:30 PM	0	26	168	60	1	27	110	19	5	45	173	25	1	41	87	23	**811**
4:30 PM	to	4:45 PM	0	50	164	45	2	33	146	25	6	47	147	24	6	47	107	18	**867**
4:45 PM	to	5:00 PM	0	30	188	72	1	29	99	24	7	35	150	24	0	64	127	31	**881**
5:00 PM	to	5:15 PM	0	34	205	59	0	32	105	21	10	45	149	20	-2	60	127	27	**892**
5:15 PM	to	5:30 PM	0	35	173	67	0	25	129	20	2	43	159	24	3	45	132	33	**890**
5:30 PM	to	5:45 PM	1	42	181	57	1	44	130	16	2	50	163	37	2	30	117	16	**889**
5:45 PM	to	6:00 PM	1	37	185	49	3	41	116	11	3	37	146	36	0	47	100	26	**838**
HOURLY TOTALS																			
4:00 PM	to	5:00 PM	1	142	687	237	6	106	445	85	21	163	628	87	7	204	428	92	**3339**
4:15 PM	to	5:15 PM	0	140	725	236	4	121	460	89	28	172	619	93	5	212	448	99	**3451**
4:30 PM	to	5:30 PM	0	149	730	243	3	119	479	90	25	170	605	92	7	216	493	109	**3530**
4:45 PM	to	5:45 PM	1	141	747	255	2	130	463	81	21	173	621	105	3	199	503	107	**3552**
5:00 PM	to	6:00 PM	2	148	744	232	4	142	480	68	17	175	617	117	3	182	476	102	**3509**

PEAK HOUR SUMMARY

4:45 PM to 5:45 PM	NORTHBOUND NBU	NBL	NBT	NBR	SOUTHBOUND SBU	SBL	SBT	SBR	EASTBOUND EBU	EBL	EBT	EBR	WESTBOUND WBU	WBL	WBT	WBR	TOTAL
VOLUME	1	141	747	255	2	130	463	81	21	173	621	105	3	199	503	107	**3552**
PHF BY MOVEMENT	0.25	0.84	0.91	0.89	0.50	0.74	0.89	0.84	0.53	0.87	0.95	0.71	0.25	0.78	0.95	0.81	OVERALL
PHF BY APPROACH	0.96				0.88				0.91				0.91				**0.99**
BICYCLE (by Direction)	0				0				3				4				**7**
PED (by Direction) *	29				19				29				40				**117**
	NORTH-END				SOUTH-END				EAST-END				WEST-END				
PED (by Leg) *	43				26				30				18				**117**

TEL: (510) 232 - 1271 FAX: (510) 232 - 1272

* Included Jay-Walk

B.A.Y.M.E.T.R.I.C.S.

PEDESTRIAN & BICYCLE MOVEMENT SUMMARY

PROJECT:	**JUVENILE JUSTICE CENTER TRAFFIC COUNTS**	**SURVEY DATE:**	**7/14/2015**	**DAY:**	**TUESDAY**
N-S APPROACH:	**FAIRMONT DRIVE**	**SURVEY PERIOD**	**4:00 PM**	**to**	**6:00 PM**
E-W APPROACH:	**E. 14TH STREET**	**JURISDICTION:**	**ALAMEDA COUNTY**	**FILE:**	**=S6**

PEAK HOUR SUMMARY

PEAK HOUR: 04:45 PM TO 05:45 PM

PEDESTRIAN | **BICYCLE**

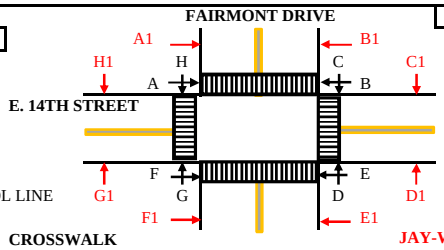

LEGEND:
- CROSSWALK
- SIDEWALK
- STOP CONTROL LINE

CROSSWALK — **JAY-WALK (in RED)**

A	B	BY LEG N-END	BY DIR NB(D+G)	BY DIR NB(D1+G1)	BY LEG N-END	A1	B1
10	33	43	29	0	0	0	0
C	D	E-END	SB(C+H)	SB(C1+H1)	E-END	C1	D1
12	18	30	19	0	0	0	0
E	F	S-END	EB(A+F)	EB(A1+F1)	S-END	E1	F1
7	19	26	29	0	0	0	0
G	H	W-END	WB(B+E)	WB(B1+E1)	W-END	G1	H1
11	7	18	40	0	0	0	0

TOTAL PEDESTRIAN 117 — **TOTAL JAY-WALK** 0

TOTAL PEDESTRIAN (Incldded JAY-WALK) *117*

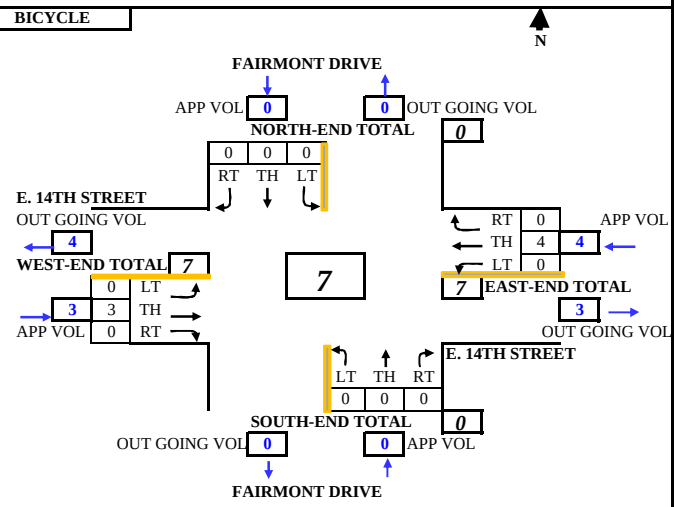

TIME From	To	PEDESTRIAN @ CROSSWALK / STOP LINE N-END A	B	E-END C	D	S-END E	F	W-END G	H	TOTAL	JAY-WALK (From Intersection to Midblock) N-END A1	B1	E-END C1	D1	S-END E1	F1	W-END G1	H1	TOTAL	BICYCLE NB SOUTH-END LT	TH	RT	SB NORTH-END LT	TH	RT	EB WEST-END LT	TH	RT	WB EAST-END LT	TH	RT	TOTAL	OVER ALL TOTAL
SURVEY DATA																																		
04:00 PM	04:15 PM	3	3	3	1	2	0	6	1		0	0	0	0	0	0	0	0		0	0	0	0	0	0	0	0	0	0	0	0			19
04:15 PM	04:30 PM	6	10	8	5	3	4	6	3		0	0	0	0	0	0	0	0		0	0	0	0	3	0	0	1	0	0	0	0			49
04:30 PM	04:45 PM	7	13	8	8	4	6	6	6		0	0	0	0	0	0	0	0		0	0	0	0	3	0	0	1	0	0	1	0			63
04:45 PM	05:00 PM	11	24	9	12	6	7	10	6		0	0	0	0	0	0	0	0		0	0	0	0	3	0	0	3	0	0	2	0			93
05:00 PM	05:15 PM	14	26	16	14	7	15	10	8		0	0	0	0	0	0	0	0		0	0	0	0	3	0	0	4	0	0	5	0			122
05:15 PM	05:30 PM	15	30	19	18	9	23	14	11		0	0	0	0	0	0	0	0		0	0	0	0	3	0	0	4	0	0	5	0			151
05:30 PM	05:45 PM	17	46	20	26	11	25	17	13		0	0	0	0	0	0	0	0		0	0	0	0	3	0	0	4	0	0	5	0			187
05:45 PM	06:00 PM	19	52	22	30	14	30	19	13		0	0	0	1	0	0	1	0		0	0	1	0	3	0	0	5	0	0	5	0			215
TOTAL BY PERIOD																																		
04:00 PM	04:15 PM	3	3	3	1	2	0	6	1	19	0	0	0	0	0	0	0	0	0	0	0	0	0	0	0	0	0	0	0	0	0	0		19
04:15 PM	04:30 PM	3	7	5	4	1	4	0	2	26	0	0	0	0	0	0	0	0	0	0	0	0	0	3	0	0	1	0	0	0	0	4		30
04:30 PM	04:45 PM	1	3	0	3	1	2	0	3	13	0	0	0	0	0	0	0	0	0	0	0	0	0	0	0	0	0	0	0	1	0	1		14
04:45 PM	05:00 PM	4	11	1	4	2	1	4	0	27	0	0	0	0	0	0	0	0	0	0	0	0	0	0	0	0	2	0	0	1	0	3		30
05:00 PM	05:15 PM	3	2	7	2	1	8	0	2	25	0	0	0	0	0	0	0	0	0	0	0	0	0	0	0	0	1	0	0	3	0	4		29
05:15 PM	05:30 PM	1	4	3	4	2	8	4	3	29	0	0	0	0	0	0	0	0	0	0	0	0	0	0	0	0	0	0	0	0	0	0		29
05:30 PM	05:45 PM	2	16	1	8	2	2	3	2	36	0	0	0	0	0	0	0	0	0	0	0	0	0	0	0	0	0	0	0	0	0	0		36
05:45 PM	06:00 PM	2	6	2	4	3	5	2	0	24	0	0	0	1	0	0	1	0	2	0	0	1	0	0	0	0	1	0	0	0	0	2		28
HOURLY TOTALS																																		
04:00 PM	05:00 PM	11	24	9	12	6	7	10	6	85	0	0	0	0	0	0	0	0	0	0	0	0	0	3	0	0	3	0	0	2	0	8		93
04:15 PM	05:15 PM	11	23	13	13	5	15	4	7	91	0	0	0	0	0	0	0	0	0	0	0	0	0	3	0	0	4	0	0	5	0	12		103
04:30 PM	05:30 PM	9	20	11	13	6	19	8	8	94	0	0	0	0	0	0	0	0	0	0	0	0	0	0	0	0	3	0	0	5	0	8		102
04:45 PM	05:45 PM	10	33	12	18	7	19	11	7	117	0	0	0	0	0	0	0	0	0	0	0	0	0	0	0	0	3	0	0	4	0	7		124
05:00 PM	06:00 PM	8	28	13	18	8	23	9	7	114	0	0	0	1	0	0	1	0	2	0	0	1	0	0	0	0	2	0	0	3	0	6		122

SUMMARY (HOURLY COUNT)

TIME From	To	PEDESTRIAN COUNTS BY LEG* N-END	S-END	E-END	W-END	TOTAL	PEDESTRIAN COUNTS BY DIRECTION* NB	SB	EB	WB	TOTAL	BICYCLE COUNTS NB	SB	EB	WB	TOTAL
04:00 PM	05:00 PM	35	13	21	16	**85**	22	15	18	30	***85***	0	3	3	2	***8***
04:15 PM	05:15 PM	34	20	26	11	**91**	17	20	26	28	***91***	0	3	4	5	***12***
04:30 PM	05:30 PM	29	25	24	16	**94**	21	19	28	26	***94***	0	0	3	5	***8***
04:45 PM	05:45 PM	43	26	30	18	**117**	29	19	29	40	***117***	0	0	3	4	***7***
05:00 PM	06:00 PM	36	31	32	17	**116**	29	20	31	36	***116***	1	0	2	3	***6***

Tel : (510) 232-1271 ***Fax: (510) 232-1272***

* Included Jay-Walk

B.A.Y.M.E.T.R.I.C.S.

INTERSECTION TURNING MOVEMENT SUMMARY

PROJECT:	**JUVENILE JUSTICE CENTER TRAFFIC COUNTS**	**SURVEY DATE:**	**7/14/2015**	**DAY:**	**TUESDAY**
N-S APPROACH:	**150TH AVENUE**	**SURVEY TIME:**	**7:00 AM**	**TO**	**9:00 AM**
E-W APPROACH:	**E. 14TH STREET**	**JURISDICTION:**	**ALAMEDA COUNTY**	**FILE:**	**3507085-7AM**

PEAK HOUR

8:00 AM to 9:00 AM

NORTH

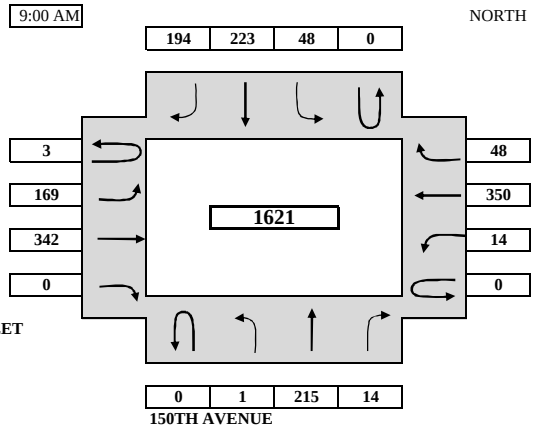

ARRIVAL / DEPARTURE VOLUMES

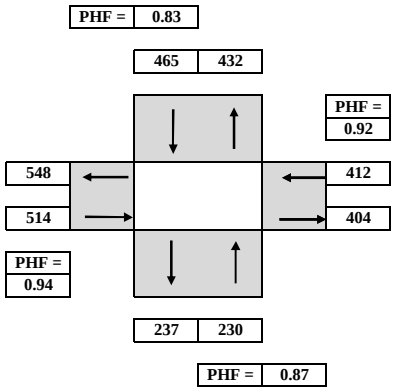

TIME PERIOD From	To	NORTHBOUND U-TURN	LEFT	THRU	RIGHT	SOUTHBOUND U-TURN	LEFT	THRU	RIGHT	EASTBOUND U-TURN	LEFT	THRU	RIGHT	WESTBOUND U-TURN	LEFT	THRU	RIGHT	TOTAL
SURVEY DATA																		
7:00 AM	7:15 AM		0	58	4		5	53	38	1	42	57	0		0	58	9	**325**
7:15 AM	7:30 AM		0	125	8		15	90	79	1	77	107	1		2	116	16	**637**
7:30 AM	7:45 AM		0	188	15		24	135	119	1	102	180	2		6	222	25	**1019**
7:45 AM	8:00 AM		0	257	19		41	197	176	1	143	248	2		7	302	32	**1425**
8:00 AM	8:15 AM		0	323	19		48	254	225	2	191	323	2		10	390	47	**1834**
8:15 AM	8:30 AM		0	376	23		59	301	269	3	230	412	2		12	474	62	**2223**
8:30 AM	8:45 AM		1	429	30		73	350	316	3	266	501	2		15	557	69	**2612**
8:45 AM	9:00 AM		1	472	33		89	420	370	4	312	590	2		21	652	80	**3046**
TOTAL BY PERIOD																		
7:00 AM	7:15 AM	0	0	58	4	0	5	53	38	1	42	57	0	0	0	58	9	**325**
7:15 AM	7:30 AM	0	0	67	4	0	10	37	41	0	35	50	1	0	2	58	7	**312**
7:30 AM	7:45 AM	0	0	63	7	0	9	45	40	0	25	73	1	0	4	106	9	**382**
7:45 AM	8:00 AM	0	0	69	4	0	17	62	57	0	41	68	0	0	1	80	7	**406**
8:00 AM	8:15 AM	0	0	66	0	0	7	57	49	1	48	75	0	0	3	88	15	**409**
8:15 AM	8:30 AM	0	0	53	4	0	11	47	44	1	39	89	0	0	2	84	15	**389**
8:30 AM	8:45 AM	0	1	53	7	0	14	49	47	0	36	89	0	0	3	83	7	**389**
8:45 AM	9:00 AM	0	0	43	3	0	16	70	54	1	46	89	0	0	6	95	11	**434**
HOURLY TOTALS																		
7:00 AM	8:00 AM	0	0	257	19	0	41	197	176	1	143	248	2	0	7	302	32	**1425**
7:15 AM	8:15 AM	0	0	265	15	0	43	201	187	1	149	266	2	0	10	332	38	**1509**
7:30 AM	8:30 AM	0	0	251	15	0	44	211	190	2	153	305	1	0	10	358	46	**1586**
7:45 AM	8:45 AM	0	1	241	15	0	49	215	197	2	164	321	0	0	9	335	44	**1593**
8:00 AM	9:00 AM	0	1	215	14	0	48	223	194	3	169	342	0	0	14	350	48	**1621**

PEAK HOUR SUMMARY

8:00 AM to 9:00 AM	NORTHBOUND NBU	NBL	NBT	NBR	SOUTHBOUND SBU	SBL	SBT	SBR	EASTBOUND EBU	EBL	EBT	EBR	WESTBOUND WBU	WBL	WBT	WBR	TOTAL
VOLUME	0	1	215	14	0	48	223	194	3	169	342	0	0	14	350	48	**1621**
PHF BY MOVEMENT	0.00	0.25	0.81	0.50	0.00	0.75	0.80	0.90	0.75	0.88	0.96	0.00	0.00	0.58	0.92	0.80	OVERALL
PHF BY APPROACH	0.87				0.83				0.94				0.92				**0.93**
BICYCLE (by Direction)	0				0				1				0				**1**
PED (by Direction) *	4				3				7				13				**27**
	NORTH-END				SOUTH-END				EAST-END				WEST-END				
PED (by Leg) *	17				3				3				4				**27**

TEL: (510) 232 - 1271 FAX: (510) 232 - 1272

* Included Jay-Walk

B.A.Y.M.E.T.R.I.C.S.

PEDESTRIAN & BICYCLE MOVEMENT SUMMARY

PROJECT:	JUVENILE JUSTICE CENTER TRAFFIC COUNTS	**SURVEY DATE:**	7/14/2015	**DAY:**	TUESDAY
N-S APPROACH:	150TH AVENUE	**SURVEY PERIOD**	7:00 AM	**to**	9:00 AM
E-W APPROACH:	E. 14TH STREET	**JURISDICTION:**	ALAMEDA COUNTY	**FILE:**	3507085-7AM

PEAK HOUR SUMMARY

PEAK HOUR: 08:00 AM TO 09:00 AM

PEDESTRIAN | **BICYCLE**

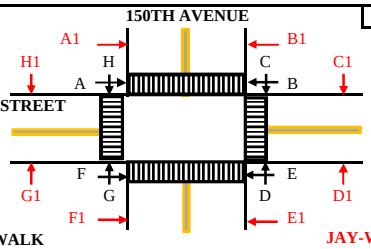

LEGEND:
- CROSSWALK
- SIDEWALK
- STOP CONTROL LINE

CROSSWALK

A	B	BY LEG N-END	BY DIR NB(D+G)	BY DIR NB(D1+G1)	BY LEG N-END	A1	B1
6	11	17	4	0	0	0	0
C	D	E-END	SB(C+H)	SB(C1+H1)	E-END	C1	D1
2	1	3	3	0	0	0	0
E	F	S-END	EB(A+F)	EB(A1+F1)	S-END	E1	F1
2	1	3	7	0	0	0	0
G	H	W-END	WB(B+E)	WB(B1+E1)	W-END	G1	H1
3	1	4	13	0	0	0	0

JAY-WALK (in RED)

TOTAL PEDESTIAN 27 — **TOTAL JAY-WALK** 0

TOTAL PEDESTIAN (Inclded JAY-WALK) 27

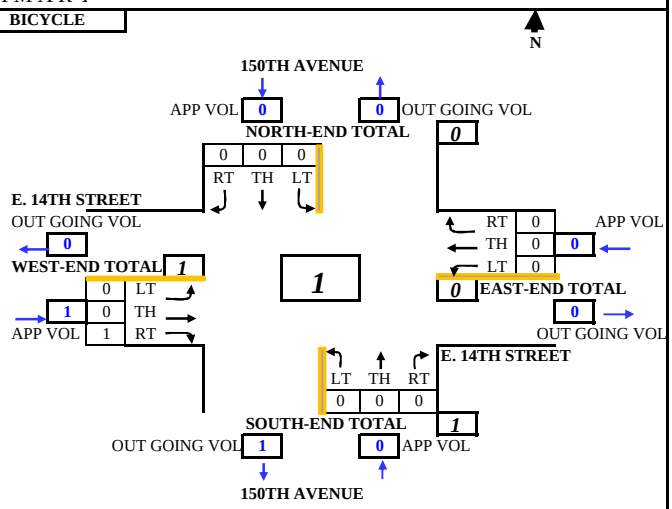

TIME From	TIME To	PEDESTRIAN @ CROSSWALK / STOP LINE N-END A	N-END B	E-END C	E-END D	S-END E	S-END F	W-END G	W-END H	TOTAL	JAY-WALK (From Intersection to Midblock) N-END A1	N-END B1	E-END C1	E-END D1	S-END E1	S-END F1	W-END G1	W-END H1	TOTAL	BICYCLE NB SOUTH-END LT	NB TH	NB RT	SB NORTH-END LT	SB TH	SB RT	EB WEST-END LT	EB TH	EB RT	WB EAST-END LT	WB TH	WB RT	TOTAL	OVER ALL TOTAL
SURVEY DATA																																	
07:00 AM	07:15 AM	1	1	0	0	0	1	0	1		0	0	0	0	0	0	0	0		0	0	0	0	0	0	0	0	0	0	0	0		4
07:15 AM	07:30 AM	1	1	0	0	0	1	0	1		0	0	0	0	0	0	0	0		0	0	0	0	0	1	0	0	0	0	0	0		5
07:30 AM	07:45 AM	2	2	1	0	1	1	1	1		0	0	0	0	0	0	0	0		0	0	0	0	0	1	0	0	0	0	0	0		10
07:45 AM	08:00 AM	4	7	1	1	3	2	1	1		0	0	0	0	0	0	0	0		0	0	0	0	0	1	0	0	0	0	0	0		21
08:00 AM	08:15 AM	6	9	2	1	3	2	2	2		0	0	0	0	0	0	0	0		0	0	0	0	0	1	0	0	0	0	0	0		28
08:15 AM	08:30 AM	6	12	2	2	3	2	3	2		0	0	0	0	0	0	0	0		0	0	0	0	0	1	0	0	1	0	0	0		34
08:30 AM	08:45 AM	9	15	3	2	4	3	3	2		0	0	0	0	0	0	0	0		0	0	0	0	0	1	0	0	1	0	0	0		43
08:45 AM	09:00 AM	10	18	3	2	5	3	4	2		0	0	0	0	0	0	0	0		0	0	0	0	0	1	0	0	1	0	0	0		49
TOTAL BY PERIOD																																	
07:00 AM	07:15 AM	1	1	0	0	0	1	0	1	4	0	0	0	0	0	0	0	0	0	0	0	0	0	0	0	0	0	0	0	0	0	0	4
07:15 AM	07:30 AM	0	0	0	0	0	0	0	0	0	0	0	0	0	0	0	0	0	0	0	0	0	0	0	1	0	0	0	0	0	0	1	1
07:30 AM	07:45 AM	1	1	1	0	1	0	1	0	5	0	0	0	0	0	0	0	0	0	0	0	0	0	0	0	0	0	0	0	0	0	0	5
07:45 AM	08:00 AM	2	5	0	1	2	1	0	0	11	0	0	0	0	0	0	0	0	0	0	0	0	0	0	0	0	0	0	0	0	0	0	11
08:00 AM	08:15 AM	2	2	1	0	0	0	1	1	7	0	0	0	0	0	0	0	0	0	0	0	0	0	0	0	0	0	0	0	0	0	0	7
08:15 AM	08:30 AM	0	3	0	1	0	0	1	0	5	0	0	0	0	0	0	0	0	0	0	0	0	0	0	0	0	0	1	0	0	0	1	6
08:30 AM	08:45 AM	3	3	1	0	1	1	0	0	9	0	0	0	0	0	0	0	0	0	0	0	0	0	0	0	0	0	0	0	0	0	0	9
08:45 AM	09:00 AM	1	3	0	0	1	0	1	0	6	0	0	0	0	0	0	0	0	0	0	0	0	0	0	0	0	0	0	0	0	0	0	6
HOURLY TOTALS																																	
07:00 AM	08:00 AM	4	7	1	1	3	2	1	1	20	0	0	0	0	0	0	0	0	0	0	0	0	0	0	1	0	0	0	0	0	0	1	21
07:15 AM	08:15 AM	5	8	2	1	3	1	2	1	23	0	0	0	0	0	0	0	0	0	0	0	0	0	0	1	0	0	0	0	0	0	1	24
07:30 AM	08:30 AM	5	11	2	2	3	1	3	1	28	0	0	0	0	0	0	0	0	0	0	0	0	0	0	0	0	0	1	0	0	0	1	29
07:45 AM	08:45 AM	7	13	2	2	3	2	2	1	32	0	0	0	0	0	0	0	0	0	0	0	0	0	0	0	0	0	1	0	0	0	1	33
08:00 AM	09:00 AM	6	11	2	1	2	1	3	1	27	0	0	0	0	0	0	0	0	0	0	0	0	0	0	0	0	0	1	0	0	0	1	28

SUMMARY (HOURLY COUNT)

TIME From	TIME To	PEDESTRIAN COUNTS BY LEG* N-END	S-END	E-END	W-END	TOTAL	PEDESTRIAN COUNTS BY DIRECTION* NB	SB	EB	WB	TOTAL	BICYCLE COUNTS NB	SB	EB	WB	TOTAL
07:00 AM	08:00 AM	11	5	2	2	20	2	2	6	10	20	0	1	0	0	1
07:15 AM	08:15 AM	13	4	3	3	23	3	3	6	11	23	0	1	0	0	1
07:30 AM	08:30 AM	16	4	4	4	28	5	3	6	14	28	0	0	1	0	1
07:45 AM	08:45 AM	20	5	4	3	32	4	3	9	16	32	0	0	1	0	1
08:00 AM	09:00 AM	17	3	3	4	27	4	3	7	13	27	0	0	1	0	1

Tel : (510) 232-1271 *Fax: (510) 232-1272*

* Included Jay-Walk

B.A.Y.M.E.T.R.I.C.S.

INTERSECTION TURNING MOVEMENT SUMMARY

PROJECT:	**JUVENILE JUSTICE CENTER TRAFFIC COUNTS**	**SURVEY DATE:**	**7/14/2015**	**DAY:**	**TUESDAY**
N-S APPROACH:	**150TH AVENUE**	**SURVEY TIME:**	**4:00 PM**	**TO**	**6:00 PM**
E-W APPROACH:	**E. 14TH STREET**	**JURISDICTION:**	**ALAMEDA COUNTY**	**FILE:**	**3507085-7PM**

PEAK HOUR

4:45 PM to 5:45 PM

NORTH

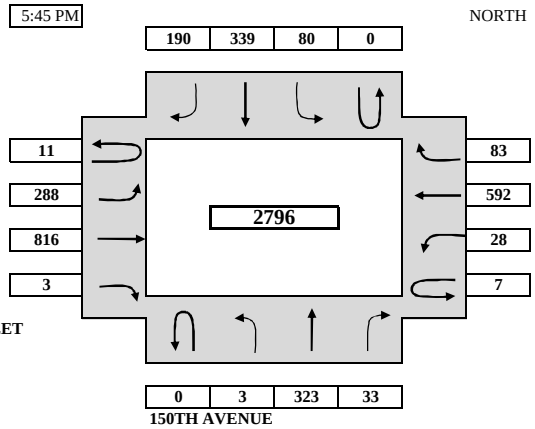

ARRIVAL / DEPARTURE VOLUMES

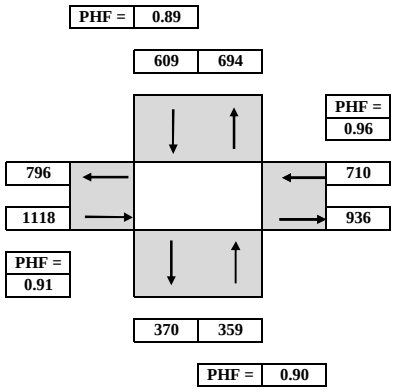

TIME PERIOD From	To	NORTHBOUND U-TURN	LEFT	THRU	RIGHT	SOUTHBOUND U-TURN	LEFT	THRU	RIGHT	EASTBOUND U-TURN	LEFT	THRU	RIGHT	WESTBOUND U-TURN	LEFT	THRU	RIGHT	TOTAL	
SURVEY DATA																			
4:00 PM	4:15 PM	0	3	73	9		31	76	51	2	68	195	2	2	3	107	17	**639**	
4:15 PM	4:30 PM	1	5	135	12		66	148	110	2	123	371	3	2	8	285	36	**1307**	
4:30 PM	4:45 PM	1	8	201	19		85	223	169	6	193	603	3	5	13	448	62	**2039**	
4:45 PM	5:00 PM	1	8	279	25		106	321	212	8	258	804	3	8	19	591	79	**2722**	
5:00 PM	5:15 PM	1	9	350	34		126	410	258	9	333	1006	3	9	28	735	97	**3408**	
5:15 PM	5:30 PM	1	10	440	43		145	471	299	13	400	1199	5	9	34	893	118	**4080**	
5:30 PM	5:45 PM	1	11	524	52		165	562	359	17	481	1419	6	12	41	1040	145	**4835**	
5:45 PM	6:00 PM	1	14	606	60		178	640	395	20	551	1610	7	13	46	1172	169	**5482**	
TOTAL BY PERIOD																			
4:00 PM	4:15 PM	0	3	73	9	0	31	76	51	2	68	195	2	2	3	107	17	**639**	
4:15 PM	4:30 PM	1	2	62	3	0	35	72	59	0	55	176	1	0	5	178	19	**668**	
4:30 PM	4:45 PM	0	3	66	7	0	19	75	59	4	70	232	0	3	5	163	26	**732**	
4:45 PM	5:00 PM	0	0	78	6	0	21	98	43	2	65	201	0	3	6	143	17	**683**	
5:00 PM	5:15 PM	0	1	71	9	0	20	89	46	1	75	202	0	1	9	144	18	**686**	
5:15 PM	5:30 PM	0	1	90	9	0	19	61	41	4	67	193	2	0	6	158	21	**672**	
5:30 PM	5:45 PM	0	1	84	9	0	20	91	60	4	81	220	1	3	7	147	27	**755**	
5:45 PM	6:00 PM	0	3	82	8	0	13	78	36	3	70	191	1	1	5	132	24	**647**	
HOURLY TOTALS																			
4:00 PM	5:00 PM	1	8	279	25	0	106	321	212	8	258	804	3	8	19	591	79	**2722**	0
4:15 PM	5:15 PM	1	6	277	25	0	95	334	207	7	265	811	1	7	25	628	80	**2769**	0
4:30 PM	5:30 PM	0	5	305	31	0	79	323	189	11	277	828	2	7	26	608	82	**2773**	0
4:45 PM	5:45 PM	0	3	323	33	0	80	339	190	11	288	816	3	7	28	592	83	**2796**	1
5:00 PM	6:00 PM	0	6	327	35	0	72	319	183	12	293	806	4	5	27	581	90	**2760**	0

PEAK HOUR SUMMARY

4:45 PM to 5:45 PM	NORTHBOUND NBU	NBL	NBT	NBR	SOUTHBOUND SBU	SBL	SBT	SBR	EASTBOUND EBU	EBL	EBT	EBR	WESTBOUND WBU	WBL	WBT	WBR	TOTAL
VOLUME	0	3	323	33	0	80	339	190	11	288	816	3	7	28	592	83	**2796**
PHF BY MOVEMENT	0.00	0.75	0.90	0.92	0.00	0.95	0.86	0.79	0.69	0.89	0.93	0.38	0.58	0.78	0.94	0.77	OVERALL
PHF BY APPROACH	0.90				0.89				0.91				0.96				**0.93**
BICYCLE (by Direction)	0				0				2				0				**2**
PED (by Direction) *	14				3				17				24				**58**
	NORTH-END				SOUTH-END				EAST-END				WEST-END				
PED (by Leg) *	18				23				10				7				**58**

TEL: (510) 232 - 1271 FAX: (510) 232 - 1272

* Included Jay-Walk

B.A.Y.M.E.T.R.I.C.S.

PEDESTRIAN & BICYCLE MOVEMENT SUMMARY

PROJECT:	**JUVENILE JUSTICE CENTER TRAFFIC COUNTS**	**SURVEY DATE:**	**7/14/2015**	**DAY:**	**TUESDAY**
N-S APPROACH:	**150TH AVENUE**	**SURVEY PERIOD**	**4:00 PM**	**to**	**6:00 PM**
E-W APPROACH:	**E. 14TH STREET**	**JURISDICTION:**	**ALAMEDA COUNTY**	**FILE:**	**3507085-7PM**

PEAK HOUR SUMMARY

PEAK HOUR: 04:45 PM TO 05:45 PM

PEDESTRIAN | **BICYCLE**

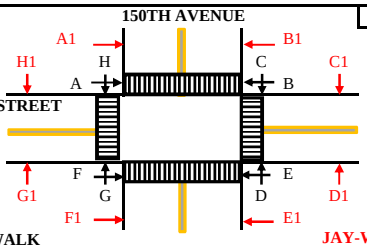

LEGEND:
- CROSSWALK
- SIDEWALK
- STOP CONTROL LINE

CROSSWALK — **JAY-WALK (in RED)**

A	B	BY LEG N-END	BY DIR NB(D+G)	BY DIR NB(D1+G1)	BY LEG N-END	A1	B1
5	13	18	14	0	0	0	0
C	D	E-END	SB(C+H)	SB(C1+H1)	E-END	C1	D1
1	9	10	3	0	0	0	0
E	F	S-END	EB(A+F)	EB(A1+F1)	S-END	E1	F1
11	12	23	17	0	0	0	0
G	H	W-END	WB(B+E)	WB(B1+E1)	W-END	G1	H1
5	2	7	24	0	0	0	0

TOTAL PEDESTRIAN 58 — **TOTAL JAY-WALK** 0

TOTAL PEDESTRIAN (Inclded JAY-WALK) 58

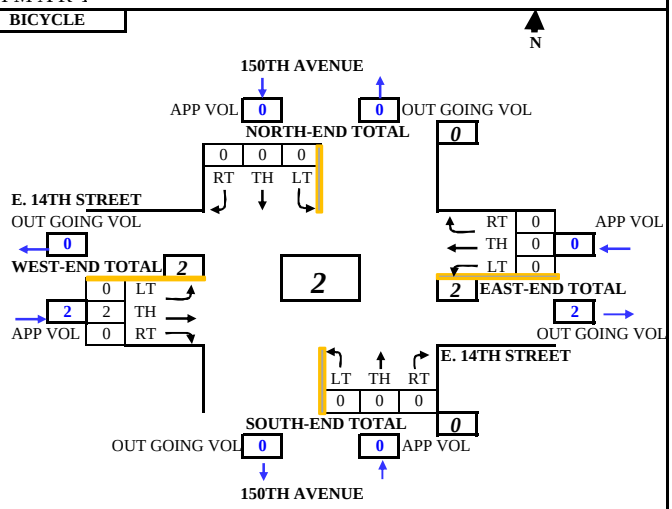

SURVEY DATA

TIME From	To	PEDESTRIAN @ CROSSWALK / STOP LINE N-END A	N-END B	E-END C	E-END D	S-END E	S-END F	W-END G	W-END H	TOTAL	JAY-WALK (From Intersection to Midblock) N-END A1	N-END B1	E-END C1	E-END D1	S-END E1	S-END F1	W-END G1	W-END H1	TOTAL	BICYCLE NB SOUTH-END LT	NB TH	NB RT	SB NORTH-END LT	SB TH	SB RT	EB WEST-END LT	EB TH	EB RT	WB EAST-END LT	WB TH	WB RT	TOTAL	OVER ALL TOTAL
04:00 PM	04:15 PM	0	3	1	4	5	2	0	0		0	0	0	0	0	0	0	0		0	0	0	0	0	0	0	1	0	0	0	0		16
04:15 PM	04:30 PM	0	7	1	5	6	5	0	1		0	0	0	0	0	0	0	0		0	0	0	0	0	0	0	3	0	0	0	0		28
04:30 PM	04:45 PM	0	9	1	8	8	5	0	1		0	0	0	0	0	0	0	0		0	0	0	0	0	0	0	4	0	0	0	0		36
04:45 PM	05:00 PM	0	10	1	8	11	12	2	2		0	0	0	0	0	0	0	0		0	0	0	0	0	0	0	4	0	0	0	0		50
05:00 PM	05:15 PM	1	12	2	11	16	14	4	2		0	0	0	0	0	0	0	0		0	0	0	0	0	0	0	5	0	0	0	0		67
05:15 PM	05:30 PM	3	18	2	13	18	17	4	3		0	0	0	0	0	0	0	0		0	0	0	0	0	0	0	5	0	0	0	0		83
05:30 PM	05:45 PM	5	22	2	17	19	17	5	3		0	0	0	0	0	0	0	0		0	0	0	0	0	0	0	6	0	0	0	0		96
05:45 PM	06:00 PM	6	25	2	20	25	17	6	3		0	0	0	0	0	0	0	0		0	0	0	0	0	0	0	7	0	0	1	0		112

TOTAL BY PERIOD

TIME From	To	A	B	C	D	E	F	G	H	TOTAL	A1	B1	C1	D1	E1	F1	G1	H1	TOTAL	NB LT	NB TH	NB RT	SB LT	SB TH	SB RT	EB LT	EB TH	EB RT	WB LT	WB TH	WB RT	TOTAL	OVER ALL TOTAL
04:00 PM	04:15 PM	0	3	1	4	5	2	0	0	15	0	0	0	0	0	0	0	0	0	0	0	0	0	0	0	0	1	0	0	0	0	1	16
04:15 PM	04:30 PM	0	4	0	1	1	3	0	1	10	0	0	0	0	0	0	0	0	0	0	0	0	0	0	0	0	2	0	0	0	0	2	12
04:30 PM	04:45 PM	0	2	0	3	2	0	0	0	7	0	0	0	0	0	0	0	0	0	0	0	0	0	0	0	0	1	0	0	0	0	1	8
04:45 PM	05:00 PM	0	1	0	0	3	7	2	1	14	0	0	0	0	0	0	0	0	0	0	0	0	0	0	0	0	0	0	0	0	0	0	14
05:00 PM	05:15 PM	1	2	1	3	5	2	2	0	16	0	0	0	0	0	0	0	0	0	0	0	0	0	0	0	0	1	0	0	0	0	1	17
05:15 PM	05:30 PM	2	6	0	2	2	3	0	1	16	0	0	0	0	0	0	0	0	0	0	0	0	0	0	0	0	0	0	0	0	0	0	16
05:30 PM	05:45 PM	2	4	0	4	1	0	1	0	12	0	0	0	0	0	0	0	0	0	0	0	0	0	0	0	0	1	0	0	0	0	1	13
05:45 PM	06:00 PM	1	3	0	3	6	0	1	0	14	0	0	0	0	0	0	0	0	0	0	0	0	0	0	0	0	1	0	0	1	0	2	16

HOURLY TOTALS

TIME From	To	A	B	C	D	E	F	G	H	TOTAL	A1	B1	C1	D1	E1	F1	G1	H1	TOTAL	NB LT	NB TH	NB RT	SB LT	SB TH	SB RT	EB LT	EB TH	EB RT	WB LT	WB TH	WB RT	TOTAL	OVER ALL TOTAL
04:00 PM	05:00 PM	0	10	1	8	11	12	2	2	46	0	0	0	0	0	0	0	0	0	0	0	0	0	0	0	0	4	0	0	0	0	4	50
04:15 PM	05:15 PM	1	9	1	7	11	12	4	2	47	0	0	0	0	0	0	0	0	0	0	0	0	0	0	0	0	4	0	0	0	0	4	51
04:30 PM	05:30 PM	3	11	1	8	12	12	4	2	53	0	0	0	0	0	0	0	0	0	0	0	0	0	0	0	0	2	0	0	0	0	2	55
04:45 PM	05:45 PM	5	13	1	9	11	12	5	2	58	0	0	0	0	0	0	0	0	0	0	0	0	0	0	0	0	2	0	0	0	0	2	60
05:00 PM	06:00 PM	6	15	1	12	14	5	4	1	58	0	0	0	0	0	0	0	0	0	0	0	0	0	0	0	0	3	0	0	1	0	4	62

SUMMARY (HOURLY COUNT)

TIME From	To	PEDESTRIAN COUNTS BY LEG* N-END	S-END	E-END	W-END	TOTAL	PEDESTRIAN COUNTS BY DIRECTION* NB	SB	EB	WB	TOTAL	BICYCLE COUNTS NB	SB	EB	WB	TOTAL
04:00 PM	05:00 PM	10	23	9	4	46	10	3	12	21	46	0	0	4	0	4
04:15 PM	05:15 PM	10	23	8	6	47	11	3	13	20	47	0	0	4	0	4
04:30 PM	05:30 PM	14	24	9	6	53	12	3	15	23	53	0	0	2	0	2
04:45 PM	05:45 PM	18	23	10	7	58	14	3	17	24	58	0	0	2	0	2
05:00 PM	06:00 PM	21	19	13	5	58	16	2	11	29	58	0	0	3	1	4

Tel : (510) 232-1271 *Fax: (510) 232-1272*

* Included Jay-Walk

B.A.Y.M.E.T.R.I.C.S.

INTERSECTION TURNING MOVEMENT SUMMARY

PROJECT:	**JUVENILE JUSTICE CENTER TRAFFIC COUNTS**	**SURVEY DATE:**	**7/14/2015**	**DAY:**	**TUESDAY**
N-S APPROACH:	**HESPERIAN BOULEVARD**	**SURVEY TIME:**	**7:00 AM**	**TO**	**9:00 AM**
E-W APPROACH:	**150TH AVENUE - LOUISE STREET**	**JURISDICTION:**	**ALAMEDA COUNTY**	**FILE:**	**3507085-8AM**

PEAK HOUR

7:30 AM to 8:30 AM

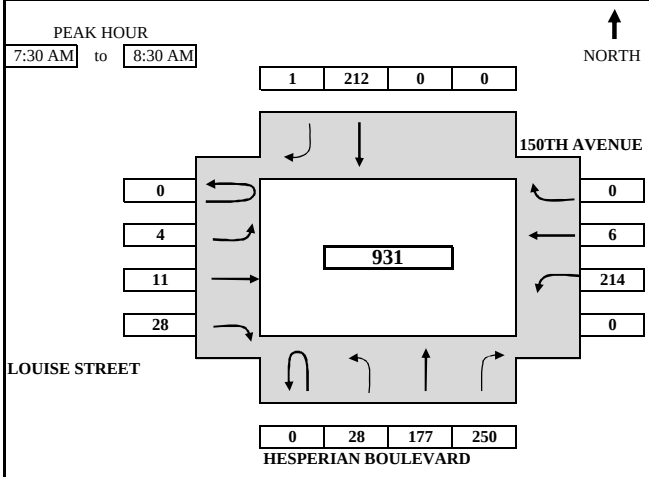

ARRIVAL / DEPARTURE VOLUMES

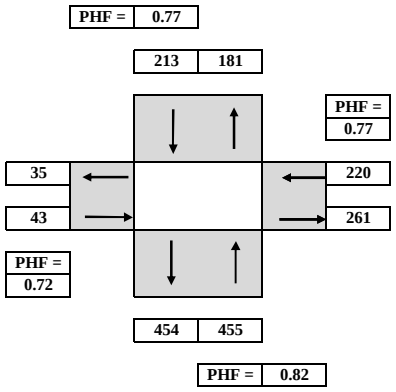

TIME From	PERIOD To	NORTHBOUND U-TURN	NORTHBOUND LEFT	NORTHBOUND THRU	NORTHBOUND RIGHT	SOUTHBOUND U-TURN	SOUTHBOUND LEFT	SOUTHBOUND THRU	SOUTHBOUND RIGHT	EASTBOUND U-TURN	EASTBOUND LEFT	EASTBOUND THRU	EASTBOUND RIGHT	WESTBOUND U-TURN	WESTBOUND LEFT	WESTBOUND THRU	WESTBOUND RIGHT	TOTAL
SURVEY DATA																		
7:00 AM	7:15 AM		0	27	57			41	0		0	5	4		52	0	0	**186**
7:15 AM	7:30 AM		5	55	125			89	0		0	8	8		91	0	0	**381**
7:30 AM	7:45 AM		9	96	186			139	0		2	14	15		136	2	0	**599**
7:45 AM	8:00 AM		20	147	263			191	0		3	16	20		205	4	0	**869**
8:00 AM	8:15 AM		27	188	320			233	0		3	18	29		256	4	0	**1078**
8:15 AM	8:30 AM		33	232	375			301	1		4	19	36		305	6	0	**1312**
8:30 AM	8:45 AM		37	283	442			348	1		5	20	44		334	10	1	**1525**
8:45 AM	9:00 AM		45	325	485			408	2		6	22	51		423	12	2	**1781**
TOTAL BY PERIOD																		
7:00 AM	7:15 AM	0	0	27	57	0	0	41	0	0	0	5	4	0	52	0	0	**186**
7:15 AM	7:30 AM	0	5	28	68	0	0	48	0	0	0	3	4	0	39	0	0	**195**
7:30 AM	7:45 AM	0	4	41	61	0	0	50	0	0	2	6	7	0	45	2	0	**218**
7:45 AM	8:00 AM	0	11	51	77	0	0	52	0	0	1	2	5	0	69	2	0	**270**
8:00 AM	8:15 AM	0	7	41	57	0	0	42	0	0	0	2	9	0	51	0	0	**209**
8:15 AM	8:30 AM	0	6	44	55	0	0	68	1	0	1	1	7	0	49	2	0	**234**
8:30 AM	8:45 AM	0	4	51	67	0	0	47	0	0	1	1	8	0	29	4	1	**213**
8:45 AM	9:00 AM	0	8	42	43	0	0	60	1	0	1	2	7	0	89	2	1	**256**
HOURLY TOTALS																		
7:00 AM	8:00 AM	0	20	147	263	0	0	191	0	0	3	16	20	0	205	4	0	**869**
7:15 AM	8:15 AM	0	27	161	263	0	0	192	0	0	3	13	25	0	204	4	0	**892**
7:30 AM	8:30 AM	0	28	177	250	0	0	212	1	0	4	11	28	0	214	6	0	**931**
7:45 AM	8:45 AM	0	28	187	256	0	0	209	1	0	3	6	29	0	198	8	1	**926**
8:00 AM	9:00 AM	0	25	178	222	0	0	217	2	0	3	6	31	0	218	8	2	**912**

PEAK HOUR SUMMARY

7:30 AM to 8:30 AM	NORTHBOUND NBU	NBL	NBT	NBR	SOUTHBOUND SBU	SBL	SBT	SBR	EASTBOUND EBU	EBL	EBT	EBR	WESTBOUND WBU	WBL	WBT	WBR	TOTAL
VOLUME	0	28	177	250	0	0	212	1	0	4	11	28	0	214	6	0	**931**
PHF BY MOVEMENT	0.00	0.64	0.87	0.81	0.00	0.00	0.78	0.25	0.00	0.50	0.46	0.78	0.00	0.78	0.75	0.00	OVERALL
PHF BY APPROACH	0.82				0.77				0.72				0.77				**0.86**
BICYCLE (by Direction)	1				2				0				0				**3**
PED (by Direction) *	5				6				0				4				**15**
	NORTH-END				SOUTH-END				EAST-END				WEST-END				
PED (by Leg) *	0				4				3				8				**15**

TEL: (510) 232 - 1271 FAX: (510) 232 - 1272

* Included Jay-Walk

B.A.Y.M.E.T.R.I.C.S.

PEDESTRIAN & BICYCLE MOVEMENT SUMMARY

PROJECT:	**JUVENILE JUSTICE CENTER TRAFFIC COUNTS**	**SURVEY DATE:**	**7/14/2015**	**DAY:**	**TUESDAY**
N-S APPROACH:	**HESPERIAN BOULEVARD**	**SURVEY PERIOD**	**7:00 AM**	**to**	**9:00 AM**
E-W APPROACH:	**150TH AVENUE - LOUISE STREET**	**JURISDICTION:**	**ALAMEDA COUNTY**	**FILE:**	**3507085-8AM**

PEAK HOUR SUMMARY

PEAK HOUR 07:30 AM TO 08:30 AM

PEDESTRIAN | **BICYCLE**

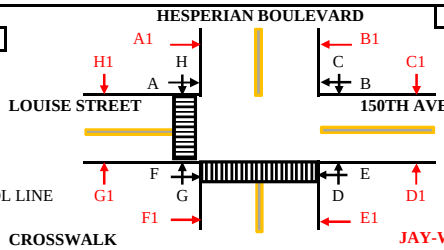

LEGEND:
- CROSSWALK
- SIDEWALK
- STOP CONTROL LINE

CROSSWALK — **JAY-WALK (in RED)**

A	B	BY LEG N-END	BY DIR NB(D+G)	BY DIR NB(D1+G1)	BY LEG N-END	A1	B1
0	0	**0**	**4**	**1**	**0**	0	0
C	D	E-END	SB(C+H)	SB(C1+H1)	E-END	C1	D1
0	0	**0**	**4**	**2**	**3**	2	1
E	F	S-END	EB(A+F)	EB(A1+F1)	S-END	E1	F1
4	0	**4**	**0**	**0**	**0**	0	0
G	H	W-END	WB(B+E)	WB(B1+E1)	W-END	G1	H1
4	4	**8**	**4**	**0**	**0**	0	0

TOTAL PEDESTIAN 12 — **TOTAL JAY-WALK** 3

TOTAL PEDESTIAN (Inclded JAY-WALK) *15*

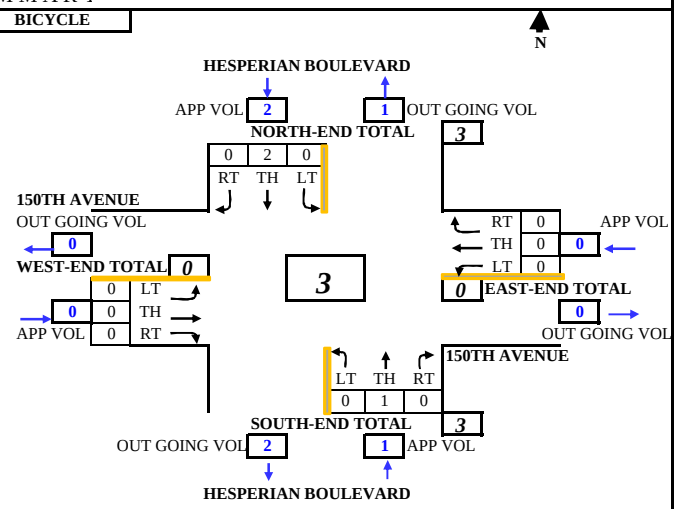

SURVEY DATA

TIME From	To	PEDESTRIAN @ CROSSWALK / STOP LINE N-END A	N-END B	E-END C	E-END D	S-END E	S-END F	W-END G	W-END H	TOTAL	JAY-WALK (From Intersection to Midblock) N-END A1	N-END B1	E-END C1	E-END D1	S-END E1	S-END F1	W-END G1	W-END H1	TOTAL	BICYCLE NB SOUTH-END LT	NB TH	NB RT	SB NORTH-END LT	SB TH	SB RT	EB WEST-END LT	EB TH	EB RT	WB EAST-END LT	WB TH	WB RT	TOTAL	OVER ALL TOTAL
07:00 AM	07:15 AM	0	0	0	0	0	0	0	0		0	0	0	0	0	0	0	0		0	0	0	0	1	0	0	0	0	0	0	0		*1*
07:15 AM	07:30 AM	0	0	0	0	0	0	0	4		0	0	3	0	0	0	0	0		0	0	0	0	1	0	0	0	0	0	0	0		*8*
07:30 AM	07:45 AM	0	0	0	0	3	0	1	8		0	0	3	0	0	0	0	0		0	1	0	0	2	0	0	0	0	0	0	0		*18*
07:45 AM	08:00 AM	0	0	0	0	3	0	1	8		0	0	5	0	0	0	0	0		0	1	0	0	2	0	0	0	0	0	0	0		*20*
08:00 AM	08:15 AM	0	0	0	0	3	0	3	8		0	0	5	0	0	0	0	0		0	1	0	0	3	0	0	0	0	0	0	0		*23*
08:15 AM	08:30 AM	0	0	0	0	4	0	4	8		0	0	5	1	0	0	0	0		0	1	0	0	3	0	0	0	0	0	0	0		*26*
08:30 AM	08:45 AM	0	0	0	0	4	0	5	9		0	0	5	1	0	0	0	0		0	1	0	0	3	0	0	0	0	0	0	0		*28*
08:45 AM	09:00 AM	0	0	0	0	4	1	6	11		0	0	6	1	0	0	0	0		0	2	0	0	3	0	0	0	0	0	0	0		*34*

TOTAL BY PERIOD

TIME From	To	A	B	C	D	E	F	G	H	TOTAL	A1	B1	C1	D1	E1	F1	G1	H1	TOTAL	NB SOUTH-END LT	NB TH	NB RT	SB NORTH-END LT	SB TH	SB RT	EB WEST-END LT	EB TH	EB RT	WB EAST-END LT	WB TH	WB RT	TOTAL	OVER ALL TOTAL
07:00 AM	07:15 AM	0	0	0	0	0	0	0	0	0	0	0	0	0	0	0	0	0	0	0	0	0	0	1	0	0	0	0	0	0	0	1	*1*
07:15 AM	07:30 AM	0	0	0	0	0	0	0	4	4	0	0	3	0	0	0	0	0	3	0	0	0	0	0	0	0	0	0	0	0	0	0	*7*
07:30 AM	07:45 AM	0	0	0	0	3	0	1	4	8	0	0	0	0	0	0	0	0	0	0	1	0	0	1	0	0	0	0	0	0	0	2	*10*
07:45 AM	08:00 AM	0	0	0	0	0	0	0	0	0	0	0	2	0	0	0	0	0	2	0	0	0	0	0	0	0	0	0	0	0	0	0	*2*
08:00 AM	08:15 AM	0	0	0	0	0	0	2	0	2	0	0	0	0	0	0	0	0	0	0	0	0	0	1	0	0	0	0	0	0	0	1	*3*
08:15 AM	08:30 AM	0	0	0	0	1	0	1	0	2	0	0	0	1	0	0	0	0	1	0	0	0	0	0	0	0	0	0	0	0	0	0	*3*
08:30 AM	08:45 AM	0	0	0	0	0	0	1	1	2	0	0	0	0	0	0	0	0	0	0	0	0	0	0	0	0	0	0	0	0	0	0	*2*
08:45 AM	09:00 AM	0	0	0	0	0	1	1	2	4	0	0	1	0	0	0	0	0	1	0	1	0	0	0	0	0	0	0	0	0	0	1	***6***

HOURLY TOTALS

TIME From	To	A	B	C	D	E	F	G	H	TOTAL	A1	B1	C1	D1	E1	F1	G1	H1	TOTAL	NB SOUTH-END LT	NB TH	NB RT	SB NORTH-END LT	SB TH	SB RT	EB WEST-END LT	EB TH	EB RT	WB EAST-END LT	WB TH	WB RT	TOTAL	OVER ALL TOTAL
07:00 AM	08:00 AM	0	0	0	0	3	0	1	8	12	0	0	5	0	0	0	0	0	5	0	1	0	0	2	0	0	0	0	0	0	0	3	***20***
07:15 AM	08:15 AM	0	0	0	0	3	0	3	8	14	0	0	5	0	0	0	0	0	5	0	1	0	0	2	0	0	0	0	0	0	0	3	***22***
07:30 AM	08:30 AM	0	0	0	0	4	0	4	4	12	0	0	2	1	0	0	0	0	3	0	1	0	0	2	0	0	0	0	0	0	0	3	***18***
07:45 AM	08:45 AM	0	0	0	0	1	0	4	1	6	0	0	2	1	0	0	0	0	3	0	0	0	0	1	0	0	0	0	0	0	0	1	***10***
08:00 AM	09:00 AM	0	0	0	0	1	1	5	3	10	0	0	1	1	0	0	0	0	2	0	1	0	0	1	0	0	0	0	0	0	0	2	***14***

SUMMARY (HOURLY COUNT)

TIME From	To	PEDESTRIAN COUNTS BY LEG* N-END	S-END	E-END	W-END	TOTAL	PEDESTRIAN COUNTS BY DIRECTION* NB	SB	EB	WB	TOTAL	BICYCLE COUNTS NB	SB	EB	WB	TOTAL
07:00 AM	08:00 AM	0	3	5	9	**17**	1	13	0	3	***17***	1	2	0	0	***3***
07:15 AM	08:15 AM	0	3	5	11	**19**	3	13	0	3	***19***	1	2	0	0	***3***
07:30 AM	08:30 AM	0	4	3	8	**15**	5	6	0	4	***15***	1	2	0	0	***3***
07:45 AM	08:45 AM	0	1	3	5	**9**	5	3	0	1	***9***	0	1	0	0	***1***
08:00 AM	09:00 AM	0	2	2	8	**12**	6	4	1	1	***12***	1	1	0	0	***2***

Tel : (510) 232-1271 ***Fax: (510) 232-1272***

* Included Jay-Walk

B.A.Y.M.E.T.R.I.C.S.

INTERSECTION TURNING MOVEMENT SUMMARY

PROJECT:	**JUVENILE JUSTICE CENTER TRAFFIC COUNTS**	**SURVEY DATE:**	**7/14/2015**	**DAY:**	**TUESDAY**
N-S APPROACH:	**HESPERIAN BOULEVARD**	**SURVEY TIME:**	**4:00 PM**	**TO**	**6:00 PM**
E-W APPROACH:	**150TH AVENUE - LOUISE STREET**	**JURISDICTION:**	**ALAMEDA COUNTY**	**FILE:**	**3507085-8PM**

PEAK HOUR
5:00 PM to 6:00 PM

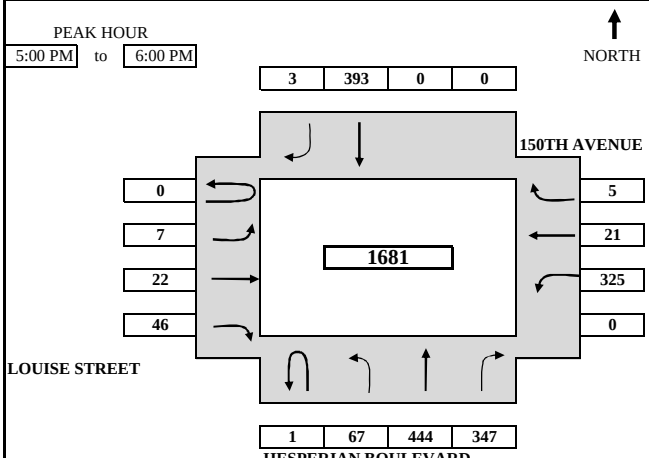

ARRIVAL / DEPARTURE VOLUMES

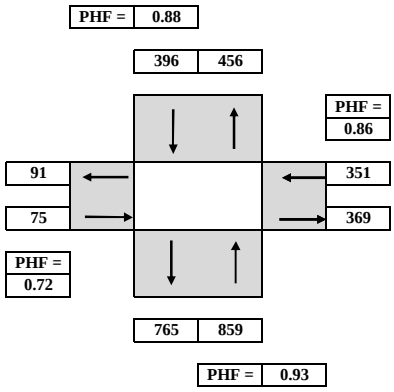

TIME PERIOD From	To	NORTHBOUND U-TURN	LEFT	THRU	RIGHT	SOUTHBOUND U-TURN	LEFT	THRU	RIGHT	EASTBOUND U-TURN	LEFT	THRU	RIGHT	WESTBOUND U-TURN	LEFT	THRU	RIGHT	TOTAL
SURVEY DATA																		
4:00 PM	4:15 PM	0	8	105	73			86	4		2	0	17		78	3	0	**376**
4:15 PM	4:30 PM	1	17	230	144			160	4		2	3	26		152	8	1	**748**
4:30 PM	4:45 PM	1	28	330	218			239	6		3	6	35		228	8	2	**1104**
4:45 PM	5:00 PM	1	44	435	297			313	7		5	9	44		326	12	2	**1495**
5:00 PM	5:15 PM	2	62	552	380			423	9		8	12	50		426	14	2	**1940**
5:15 PM	5:30 PM	2	69	652	469			510	10		8	20	59		496	17	5	**2317**
5:30 PM	5:45 PM	2	88	759	557			609	10		9	26	72		578	25	7	**2742**
5:45 PM	6:00 PM	2	111	879	644			706	10		12	31	90		651	33	7	**3176**
TOTAL BY PERIOD																		
4:00 PM	4:15 PM	0	8	105	73	0	0	86	4	0	2	0	17	0	78	3	0	**376**
4:15 PM	4:30 PM	1	9	125	71	0	0	74	0	0	0	3	9	0	74	5	1	**372**
4:30 PM	4:45 PM	0	11	100	74	0	0	79	2	0	1	3	9	0	76	0	1	**356**
4:45 PM	5:00 PM	0	16	105	79	0	0	74	1	0	2	3	9	0	98	4	0	**391**
5:00 PM	5:15 PM	1	18	117	83	0	0	110	2	0	3	3	6	0	100	2	0	**445**
5:15 PM	5:30 PM	0	7	100	89	0	0	87	1	0	0	8	9	0	70	3	3	**377**
5:30 PM	5:45 PM	0	19	107	88	0	0	99	0	0	1	6	13	0	82	8	2	**425**
5:45 PM	6:00 PM	0	23	120	87	0	0	97	0	0	3	5	18	0	73	8	0	**434**
HOURLY TOTALS																		
4:00 PM	5:00 PM	1	44	435	297	0	0	313	7	0	5	9	44	0	326	12	2	**1495**
4:15 PM	5:15 PM	2	54	447	307	0	0	337	5	0	6	12	33	0	348	11	2	**1564**
4:30 PM	5:30 PM	1	52	422	325	0	0	350	6	0	6	17	33	0	344	9	4	**1569**
4:45 PM	5:45 PM	1	60	429	339	0	0	370	4	0	6	20	37	0	350	17	5	**1638**
5:00 PM	6:00 PM	1	67	444	347	0	0	393	3	0	7	22	46	0	325	21	5	**1681**

PEAK HOUR SUMMARY

5:00 PM to 6:00 PM	NORTHBOUND NBU	NBL	NBT	NBR	SOUTHBOUND SBU	SBL	SBT	SBR	EASTBOUND EBU	EBL	EBT	EBR	WESTBOUND WBU	WBL	WBT	WBR	TOTAL
VOLUME	1	67	444	347	0	0	393	3	0	7	22	46	0	325	21	5	**1681**
PHF BY MOVEMENT	0.25	0.73	0.93	0.97	0.00	0.00	0.89	0.38	0.00	0.58	0.69	0.64	0.00	0.81	0.66	0.42	OVERALL
PHF BY APPROACH	0.93				0.88				0.72				0.86				**0.94**
BICYCLE (by Direction)	1				2				0				0				**3**
PED (by Direction) *	4				7				7				1				**19**
	NORTH-END				SOUTH-END				EAST-END				WEST-END				
PED (by Leg) *	1				7				3				8				**19**

TEL: (510) 232 - 1271 FAX: (510) 232 - 1272

* Included Jay-Walk

B.A.Y.M.E.T.R.I.C.S.

PEDESTRIAN & BICYCLE MOVEMENT SUMMARY

PROJECT:	**JUVENILE JUSTICE CENTER TRAFFIC COUNTS**	**SURVEY DATE:**	**7/14/2015**	**DAY:**	**TUESDAY**
N-S APPROACH:	**HESPERIAN BOULEVARD**	**SURVEY PERIOD**	**4:00 PM**	**to**	**6:00 PM**
E-W APPROACH:	**150TH AVENUE - LOUISE STREET**	**JURISDICTION:**	**ALAMEDA COUNTY**	**FILE:**	**3507085-8PM**

PEAK HOUR SUMMARY

PEAK HOUR 05:00 PM TO 06:00 PM

PEDESTRIAN | **BICYCLE**

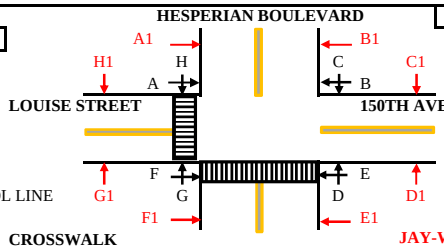

LEGEND:
- CROSSWALK
- SIDEWALK
- STOP CONTROL LINE

CROSSWALK — **JAY-WALK (in RED)**

A	B	BY LEG N-END	BY DIR NB(D+G)	BY DIR NB(D1+G1)	BY LEG N-END	A1	B1
0	0	**0**	**2**	**2**	**1**	1	0
C	D	E-END	SB(C+H)	SB(C1+H1)	E-END	C1	D1
0	0	**0**	**6**	**1**	**3**	1	2
E	F	S-END	EB(A+F)	EB(A1+F1)	S-END	E1	F1
1	6	**7**	**6**	**1**	**0**	0	0
G	H	W-END	WB(B+E)	WB(B1+E1)	W-END	G1	H1
2	6	**8**	**1**	**0**	**0**	0	0

TOTAL PEDESTRIAN 15 — **TOTAL JAY-WALK** 4

TOTAL PEDESTRIAN (Incldded JAY-WALK) *19*

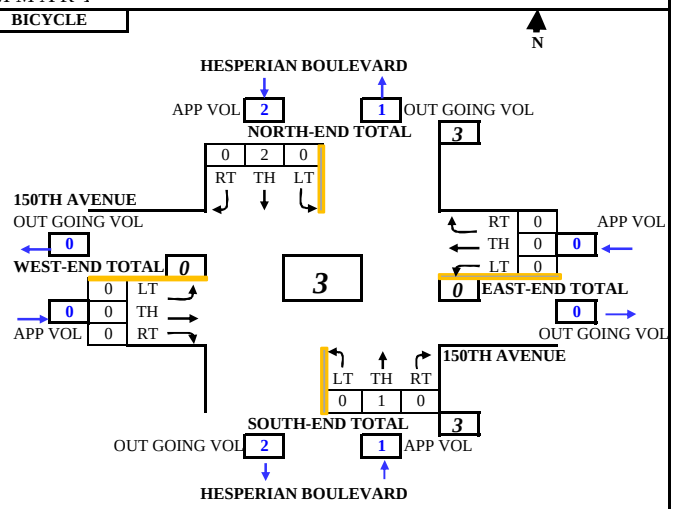

SURVEY DATA

TIME From	To	PEDESTRIAN @ CROSSWALK / STOP LINE N-END A	N-END B	E-END C	E-END D	S-END E	S-END F	W-END G	W-END H	TOTAL	JAY-WALK (From Intersection to Midblock) N-END A1	N-END B1	E-END C1	E-END D1	S-END E1	S-END F1	W-END G1	W-END H1	TOTAL	BICYCLE NB SOUTH-END LT	NB TH	NB RT	SB NORTH-END LT	SB TH	SB RT	EB WEST-END LT	EB TH	EB RT	WB EAST-END LT	WB TH	WB RT	TOTAL	OVER ALL TOTAL
04:00 PM	04:15 PM	0	0	0	0	0	0	5	0		0	0	0	1	0	0	0	0		0	0	0	0	1	0	0	0	0	0	0	0	0	*7*
04:15 PM	04:30 PM	0	0	0	0	2	0	6	0		0	0	1	1	0	0	0	0		0	0	0	0	1	0	0	0	0	0	0	0	0	*11*
04:30 PM	04:45 PM	0	0	0	0	3	1	9	0		0	0	1	1	1	0	0	0		0	0	0	0	1	0	0	0	0	0	0	0	0	*17*
04:45 PM	05:00 PM	0	0	0	0	5	1	12	0		0	0	1	1	1	0	0	0		0	1	0	0	2	0	0	0	1	0	0	0	0	*25*
05:00 PM	05:15 PM	0	0	0	0	6	3	12	0		0	0	1	1	1	0	0	0		0	1	0	0	3	0	0	0	1	0	0	0	0	*29*
05:15 PM	05:30 PM	0	0	0	0	6	3	12	2		0	0	2	1	1	0	0	0		0	1	0	0	4	0	0	0	1	0	0	0	0	*33*
05:30 PM	05:45 PM	0	0	0	0	6	3	13	3		0	0	2	2	1	0	0	0		0	2	0	0	4	0	0	0	1	0	0	0	0	*37*
05:45 PM	06:00 PM	0	0	0	0	6	7	14	6		1	0	2	3	1	0	0	0		0	2	0	0	4	0	0	0	1	0	0	0	0	*47*

TOTAL BY PERIOD

TIME From	To	N-END A	N-END B	E-END C	E-END D	S-END E	S-END F	W-END G	W-END H	TOTAL	N-END A1	N-END B1	E-END C1	E-END D1	S-END E1	S-END F1	W-END G1	W-END H1	TOTAL	NB SOUTH-END LT	NB TH	NB RT	SB NORTH-END LT	SB TH	SB RT	EB WEST-END LT	EB TH	EB RT	WB EAST-END LT	WB TH	WB RT	TOTAL	OVER ALL TOTAL
04:00 PM	04:15 PM	0	0	0	0	0	0	5	0	5	0	0	0	1	0	0	0	0	1	0	0	0	0	1	0	0	0	0	0	0	0	1	*7*
04:15 PM	04:30 PM	0	0	0	0	2	0	1	0	3	0	0	1	0	0	0	0	0	1	0	0	0	0	0	0	0	0	0	0	0	0	0	*4*
04:30 PM	04:45 PM	0	0	0	0	1	1	3	0	5	0	0	0	0	1	0	0	0	1	0	0	0	0	0	0	0	0	0	0	0	0	0	*6*
04:45 PM	05:00 PM	0	0	0	0	2	0	3	0	5	0	0	0	0	0	0	0	0	0	0	1	0	0	1	0	0	0	1	0	0	0	3	*8*
05:00 PM	05:15 PM	0	0	0	0	1	2	0	0	3	0	0	0	0	0	0	0	0	0	0	0	0	0	1	0	0	0	0	0	0	0	1	*4*
05:15 PM	05:30 PM	0	0	0	0	0	0	0	2	2	0	0	1	0	0	0	0	0	1	0	0	0	0	1	0	0	0	0	0	0	0	1	*4*
05:30 PM	05:45 PM	0	0	0	0	0	0	1	1	2	0	0	0	1	0	0	0	0	1	0	1	0	0	0	0	0	0	0	0	0	0	1	*4*
05:45 PM	06:00 PM	0	0	0	0	0	4	1	3	8	1	0	0	1	0	0	0	0	2	0	0	0	0	0	0	0	0	0	0	0	0	0	***10***

HOURLY TOTALS

TIME From	To	N-END A	N-END B	E-END C	E-END D	S-END E	S-END F	W-END G	W-END H	TOTAL	N-END A1	N-END B1	E-END C1	E-END D1	S-END E1	S-END F1	W-END G1	W-END H1	TOTAL	NB SOUTH-END LT	NB TH	NB RT	SB NORTH-END LT	SB TH	SB RT	EB WEST-END LT	EB TH	EB RT	WB EAST-END LT	WB TH	WB RT	TOTAL	OVER ALL TOTAL
04:00 PM	05:00 PM	0	0	0	0	5	1	12	0	18	0	0	1	1	1	0	0	0	3	0	1	0	0	2	0	0	0	1	0	0	0	4	***25***
04:15 PM	05:15 PM	0	0	0	0	6	3	7	0	16	0	0	1	0	1	0	0	0	2	0	1	0	0	2	0	0	0	1	0	0	0	4	***22***
04:30 PM	05:30 PM	0	0	0	0	4	3	6	2	15	0	0	1	0	1	0	0	0	2	0	1	0	0	3	0	0	0	1	0	0	0	5	***22***
04:45 PM	05:45 PM	0	0	0	0	3	2	4	3	12	0	0	1	1	0	0	0	0	2	0	2	0	0	3	0	0	0	1	0	0	0	6	***20***
05:00 PM	06:00 PM	0	0	0	0	1	6	2	6	15	1	0	1	2	0	0	0	0	4	0	1	0	0	2	0	0	0	0	0	0	0	3	***22***

SUMMARY (HOURLY COUNT)

TIME From	To	PEDESTRIAN COUNTS BY LEG* N-END	S-END	E-END	W-END	TOTAL	PEDESTRIAN COUNTS BY DIRECTION* NB	SB	EB	WB	TOTAL	BICYCLE COUNTS NB	SB	EB	WB	TOTAL
04:00 PM	05:00 PM	0	7	2	12	**21**	13	1	1	6	***21***	1	2	1	0	***4***
04:15 PM	05:15 PM	0	10	1	7	**18**	7	1	3	7	***18***	1	2	1	0	***4***
04:30 PM	05:30 PM	0	8	1	8	**17**	6	3	3	5	***17***	1	3	1	0	***5***
04:45 PM	05:45 PM	0	5	2	7	**14**	5	4	2	3	***14***	2	3	1	0	***6***
05:00 PM	06:00 PM	1	7	3	8	**19**	4	7	7	1	***19***	1	2	0	0	***3***

Tel : (510) 232-1271 ***Fax: (510) 232-1272***

* Included Jay-Walk

B.A.Y.M.E.T.R.I.C.S.

INTERSECTION TURNING MOVEMENT SUMMARY

PROJECT:	**JUVENILE JUSTICE CENTER TRAFFIC COUNTS**	**SURVEY DATE:**	**7/14/2015**	**DAY:**	**TUESDAY**
N-S APPROACH:	**FAIRMONT DRIVE**	**SURVEY TIME:**	**7:00 AM**	**TO**	**9:00 AM**
E-W APPROACH:	**NORTH ACCESS ROAD**	**JURISDICTION:**	**ALAMEDA COUNTY**	**FILE:**	**3507085-9A AM**

PEAK HOUR
7:45 AM to 8:45 AM

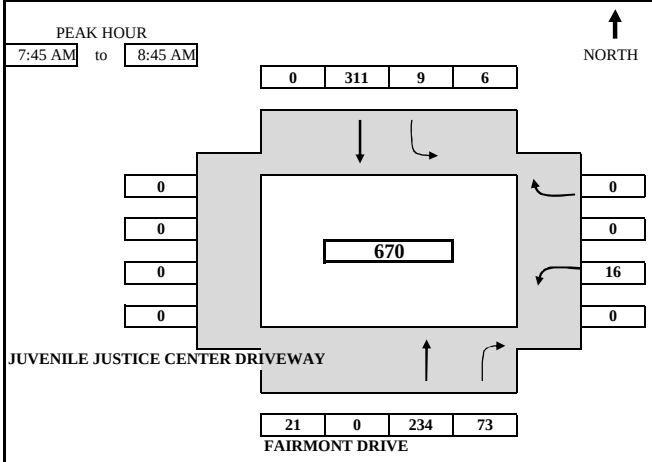

ARRIVAL / DEPARTURE VOLUMES

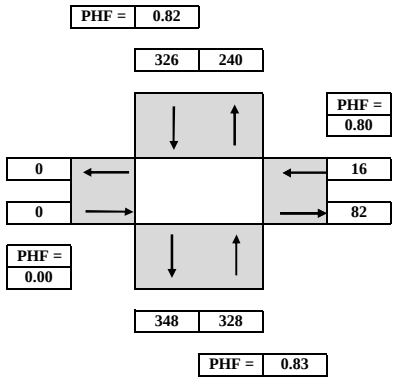

TIME From	TO	NORTHBOUND U-TURN	LEFT	THRU	RIGHT	SOUTHBOUND U-TURN	LEFT	THRU	RIGHT	EASTBOUND U-TURN	LEFT	THRU	RIGHT	WESTBOUND U-TURN	LEFT	THRU	RIGHT	TOTAL
SURVEY DATA																		
7:00 AM	7:15 AM	1		24	6	0	2	59							11		0	**103**
7:15 AM	7:30 AM	1		50	11	0	2	118							15		0	**197**
7:30 AM	7:45 AM	3		83	18	1	3	200							17		0	**325**
7:45 AM	8:00 AM	7		158	38	4	7	293							20		0	**527**
8:00 AM	8:15 AM	10		215	52	5	9	369							23		0	**683**
8:15 AM	8:30 AM	11		268	72	7	11	442							28		0	**839**
8:30 AM	8:45 AM	24		317	91	7	12	511							33		0	**995**
8:45 AM	9:00 AM	38		388	100	8	15	554							36		0	**1139**
TOTAL BY PERIOD																		
7:00 AM	7:15 AM	1	0	24	6	0	2	59	0	0	0	0	0	0	11	0	0	**103**
7:15 AM	7:30 AM	0	0	26	5	0	0	59	0	0	0	0	0	0	4	0	0	**94**
7:30 AM	7:45 AM	2	0	33	7	1	1	82	0	0	0	0	0	0	2	0	0	**128**
7:45 AM	8:00 AM	4	0	75	20	3	4	93	0	0	0	0	0	0	3	0	0	**202**
8:00 AM	8:15 AM	3	0	57	14	1	2	76	0	0	0	0	0	0	3	0	0	**156**
8:15 AM	8:30 AM	1	0	53	20	2	2	73	0	0	0	0	0	0	5	0	0	**156**
8:30 AM	8:45 AM	13	0	49	19	0	1	69	0	0	0	0	0	0	5	0	0	**156**
8:45 AM	9:00 AM	14	0	71	9	1	3	43	0	0	0	0	0	0	3	0	0	**144**
HOURLY TOTALS																		
7:00 AM	8:00 AM	7	0	158	38	4	7	293	0	0	0	0	0	0	20	0	0	**527**
7:15 AM	8:15 AM	9	0	191	46	5	7	310	0	0	0	0	0	0	12	0	0	**580**
7:30 AM	8:30 AM	10	0	218	61	7	9	324	0	0	0	0	0	0	13	0	0	**642**
7:45 AM	8:45 AM	21	0	234	73	6	9	311	0	0	0	0	0	0	16	0	0	**670**
8:00 AM	9:00 AM	31	0	230	62	4	8	261	0	0	0	0	0	0	16	0	0	**612**

PEAK HOUR SUMMARY

7:45 AM to 8:45 AM	NORTHBOUND NBU	NBL	NBT	NBR	SOUTHBOUND SBU	SBL	SBT	SBR	EASTBOUND EBU	EBL	EBT	EBR	WESTBOUND WBU	WBL	WBT	WBR	TOTAL
VOLUME	21	0	234	73	6	9	311	0	0	0	0	0	0	16	0	0	**670**
PHF BY MOVEMENT	0.40	0.00	0.78	0.91	0.50	0.56	0.84	0.00	0.00	0.00	0.00	0.00	0.00	0.80	0.00	0.00	OVERALL
PHF BY APPROACH	0.83				0.82				0.00				0.80				**0.83**
BICYCLE (by Direction)	0				0				0				0				**0**
PED (by Direction) *	0				0				0				0				**0**
	NORTH-END				SOUTH-END				EAST-END				WEST-END				
PED (by Leg) *	0				0				0				0				**0**

TEL: (510) 232 - 1271 FAX: (510) 232 - 1272

* Included Jay-Walk

B.A.Y.M.E.T.R.I.C.S.

PEDESTRIAN & BICYCLE MOVEMENT SUMMARY

PROJECT:	JUVENILE JUSTICE CENTER TRAFFIC COUNTS	**SURVEY DATE:**	7/14/2015	**DAY:**	TUESDAY
N-S APPROACH:	FAIRMONT DRIVE	**SURVEY PERIOD:**	7:00 AM	to	9:00 AM
E-W APPROACH:	NORTH ACCESS ROAD	**JURISDICTION:**	ALAMEDA COUNTY	**FILE:**	3507085-9A AM

PEAK HOUR SUMMARY

PEAK HOUR 07:45 AM TO 08:45 AM

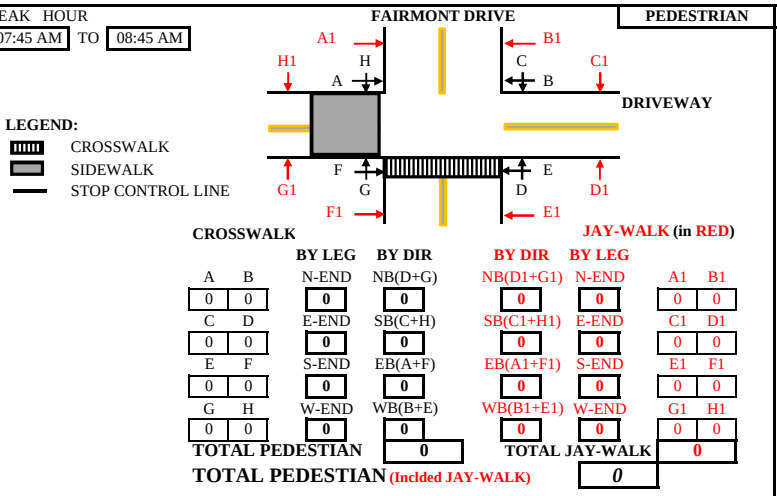

		BY LEG	BY DIR	BY DIR	BY LEG		
A	B	N-END	NB(D+G)	NB(D1+G1)	N-END	A1	B1
0	0	0	0	0	0	0	0
C	D	E-END	SB(C+H)	SB(C1+H1)	E-END	C1	D1
0	0	0	0	0	0	0	0
E	F	S-END	EB(A+F)	EB(A1+F1)	S-END	E1	F1
0	0	0	0	0	0	0	0
G	H	W-END	WB(B+E)	WB(B1+E1)	W-END	G1	H1
0	0	0	0	0	0	0	0

TOTAL PEDESTIAN 0 **TOTAL JAY-WALK** 0

TOTAL PEDESTIAN (Inclded JAY-WALK) 0

PEDESTRIAN	BICYCLE

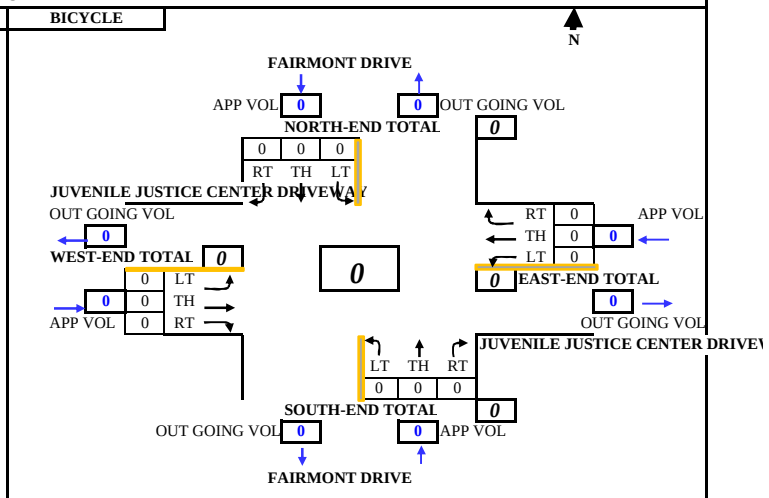

TIME From	TIME To	PEDESTRIAN @ CROSSWALK / STOP LINE N-END A	N-END B	E-END C	E-END D	S-END E	S-END F	W-END G	W-END H	TOTAL	PEDESTRIAN JAY-WALK (From Intersection to Midblock) N-END A1	N-END B1	E-END C1	E-END D1	S-END E1	S-END F1	W-END G1	W-END H1	TOTAL	BICYCLE NB SOUTH-END LT	NB TH	NB RT	SB NORTH-END LT	SB TH	SB RT	EB WEST-END LT	EB TH	EB RT	WB EAST-END LT	WB TH	WB RT	TOTAL	OVER ALL TOTAL
SURVEY DATA																																	
07:00 AM	07:15 AM	0	0	0	0	0	0	0	0		0	0	0	0	0	0	0	0		0	0	0	0	0	0	0	0	0	0	0	0		0
07:15 AM	07:30 AM	0	0	0	0	0	0	0	0		0	0	0	0	0	0	0	0		0	1	0	0	0	0	0	0	0	0	0	0		1
07:30 AM	07:45 AM	0	0	0	0	0	0	0	0		0	0	0	0	0	0	0	0		0	2	0	0	0	0	0	0	0	0	0	0		2
07:45 AM	08:00 AM	0	0	0	0	0	0	0	0		0	0	0	0	0	0	0	0		0	2	0	0	0	0	0	0	0	0	0	0		2
08:00 AM	08:15 AM	0	0	0	0	0	0	0	0		0	0	0	0	0	0	0	0		0	2	0	0	0	0	0	0	0	0	0	0		2
08:15 AM	08:30 AM	0	0	0	0	0	0	0	0		0	0	0	0	0	0	0	0		0	2	0	0	0	0	0	0	0	0	0	0		2
08:30 AM	08:45 AM	0	0	0	0	0	0	0	0		0	0	0	0	0	0	0	0		0	2	0	0	0	0	0	0	0	0	0	0		2
08:45 AM	09:00 AM	0	0	0	0	0	0	0	0		0	0	0	0	0	0	0	0		0	2	0	0	0	0	0	0	0	0	0	0		2
TOTAL BY PERIOD																																	
07:00 AM	07:15 AM	0	0	0	0	0	0	0	0	0	0	0	0	0	0	0	0	0	0	0	0	0	0	0	0	0	0	0	0	0	0	0	0
07:15 AM	07:30 AM	0	0	0	0	0	0	0	0	0	0	0	0	0	0	0	0	0	0	0	1	0	0	0	0	0	0	0	0	0	0	1	1
07:30 AM	07:45 AM	0	0	0	0	0	0	0	0	0	0	0	0	0	0	0	0	0	0	0	1	0	0	0	0	0	0	0	0	0	0	1	1
07:45 AM	08:00 AM	0	0	0	0	0	0	0	0	0	0	0	0	0	0	0	0	0	0	0	0	0	0	0	0	0	0	0	0	0	0	0	0
08:00 AM	08:15 AM	0	0	0	0	0	0	0	0	0	0	0	0	0	0	0	0	0	0	0	0	0	0	0	0	0	0	0	0	0	0	0	0
08:15 AM	08:30 AM	0	0	0	0	0	0	0	0	0	0	0	0	0	0	0	0	0	0	0	0	0	0	0	0	0	0	0	0	0	0	0	0
08:30 AM	08:45 AM	0	0	0	0	0	0	0	0	0	0	0	0	0	0	0	0	0	0	0	0	0	0	0	0	0	0	0	0	0	0	0	0
08:45 AM	09:00 AM	0	0	0	0	0	0	0	0	0	0	0	0	0	0	0	0	0	0	0	0	0	0	0	0	0	0	0	0	0	0	0	0
HOURLY TOTALS																																	
07:00 AM	08:00 AM	0	0	0	0	0	0	0	0	0	0	0	0	0	0	0	0	0	0	0	2	0	0	0	0	0	0	0	0	0	0	2	2
07:15 AM	08:15 AM	0	0	0	0	0	0	0	0	0	0	0	0	0	0	0	0	0	0	0	2	0	0	0	0	0	0	0	0	0	0	2	2
07:30 AM	08:30 AM	0	0	0	0	0	0	0	0	0	0	0	0	0	0	0	0	0	0	0	1	0	0	0	0	0	0	0	0	0	0	1	1
07:45 AM	08:45 AM	0	0	0	0	0	0	0	0	0	0	0	0	0	0	0	0	0	0	0	0	0	0	0	0	0	0	0	0	0	0	0	0
08:00 AM	09:00 AM	0	0	0	0	0	0	0	0	0	0	0	0	0	0	0	0	0	0	0	0	0	0	0	0	0	0	0	0	0	0	0	0

SUMMARY (HOURLY COUNT)

TIME From	TIME To	PEDESTRIAN COUNTS BY LEG* N-END	S-END	E-END	W-END	TOTAL	PEDESTRIAN COUNTS BY DIRECTION* NB	SB	EB	WB	TOTAL	BICYCLE COUNTS NB	SB	EB	WB	TOTAL
07:00 AM	08:00 AM	0	0	0	0	0	0	0	0	0	0	2	0	0	0	2
07:15 AM	08:15 AM	0	0	0	0	0	0	0	0	0	0	2	0	0	0	2
07:30 AM	08:30 AM	0	0	0	0	0	0	0	0	0	0	1	0	0	0	1
07:45 AM	08:45 AM	0	0	0	0	0	0	0	0	0	0	0	0	0	0	0
08:00 AM	09:00 AM	0	0	0	0	0	0	0	0	0	0	0	0	0	0	0

Tel : (510) 232-1271 *Fax: (510) 232-1272*

* Included Jay-Walk

B.A.Y.M.E.T.R.I.C.S.

INTERSECTION TURNING MOVEMENT SUMMARY

PROJECT:	**JUVENILE JUSTICE CENTER TRAFFIC COUNTS**	**SURVEY DATE:**	**7/14/2015**	**DAY:**	**TUESDAY**
N-S APPROACH:	**FAIRMONT DRIVE**	**SURVEY TIME:**	**4:00 PM**	**TO**	**6:00 PM**
E-W APPROACH:	**NORTH ACCESS ROAD**	**JURISDICTION:**	**ALAMEDA COUNTY**	**FILE:**	**3507085-9A PM**

PEAK HOUR
4:30 PM to 5:30 PM

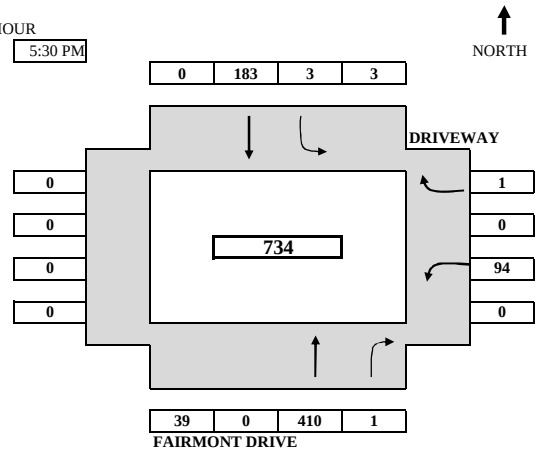

ARRIVAL / DEPARTURE VOLUMES

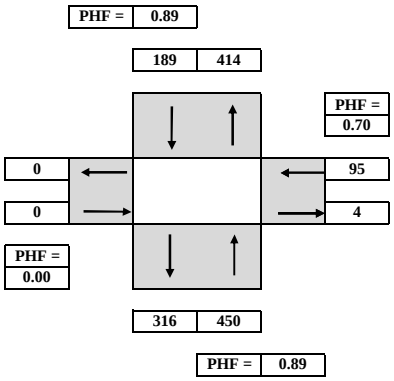

TIME From	PERIOD To	NORTHBOUND U-TURN	NORTHBOUND LEFT	NORTHBOUND THRU	NORTHBOUND RIGHT	SOUTHBOUND U-TURN	SOUTHBOUND LEFT	SOUTHBOUND THRU	SOUTHBOUND RIGHT	EASTBOUND U-TURN	EASTBOUND LEFT	EASTBOUND THRU	EASTBOUND RIGHT	WESTBOUND U-TURN	WESTBOUND LEFT	WESTBOUND THRU	WESTBOUND RIGHT	TOTAL
SURVEY DATA																		
4:00 PM	4:15 PM	2		103	1	2	1	38							22		1	**170**
4:15 PM	4:30 PM	6		174	4	5	1	81							38		1	**310**
4:30 PM	4:45 PM	27		273	4	7	2	125							69		2	**509**
4:45 PM	5:00 PM	31		379	4	8	3	169							86		2	**682**
5:00 PM	5:15 PM	38		466	4	8	4	211							120		2	**853**
5:15 PM	5:30 PM	45		584	5	8	4	264							132		2	**1044**
5:30 PM	5:45 PM	48		663	5	9	4	309							145		2	**1185**
5:45 PM	6:00 PM	55		753	5	9	4	347							151		3	**1327**
TOTAL BY PERIOD																		
4:00 PM	4:15 PM	2	0	103	1	2	1	38	0	0	0	0	0	0	22	0	1	**170**
4:15 PM	4:30 PM	4	0	71	3	3	0	43	0	0	0	0	0	0	16	0	0	**140**
4:30 PM	4:45 PM	21	0	99	0	2	1	44	0	0	0	0	0	0	31	0	1	**199**
4:45 PM	5:00 PM	4	0	106	0	1	1	44	0	0	0	0	0	0	17	0	0	**173**
5:00 PM	5:15 PM	7	0	87	0	0	1	42	0	0	0	0	0	0	34	0	0	**171**
5:15 PM	5:30 PM	7	0	118	1	0	0	53	0	0	0	0	0	0	12	0	0	**191**
5:30 PM	5:45 PM	3	0	79	0	1	0	45	0	0	0	0	0	0	13	0	0	**141**
5:45 PM	6:00 PM	7	0	90	0	0	0	38	0	0	0	0	0	0	6	0	1	**142**
HOURLY TOTALS																		
4:00 PM	5:00 PM	31	0	379	4	8	3	169	0	0	0	0	0	0	86	0	2	**682**
4:15 PM	5:15 PM	36	0	363	3	6	3	173	0	0	0	0	0	0	98	0	1	**683**
4:30 PM	5:30 PM	39	0	410	1	3	3	183	0	0	0	0	0	0	94	0	1	**734**
4:45 PM	5:45 PM	21	0	390	1	2	2	184	0	0	0	0	0	0	76	0	0	**676**
5:00 PM	6:00 PM	24	0	374	1	1	1	178	0	0	0	0	0	0	65	0	1	**645**

PEAK HOUR SUMMARY

4:30 PM to 5:30 PM	NORTHBOUND NBU	NBL	NBT	NBR	SOUTHBOUND SBU	SBL	SBT	SBR	EASTBOUND EBU	EBL	EBT	EBR	WESTBOUND WBU	WBL	WBT	WBR	TOTAL
VOLUME	39	0	410	1	3	3	183	0	0	0	0	0	0	94	0	1	**734**
PHF BY MOVEMENT	0.46	0.00	0.87	0.25	0.38	0.75	0.86	0.00	0.00	0.00	0.00	0.00	0.00	0.69	0.00	0.25	OVERALL
PHF BY APPROACH	0.89				0.89				0.00				0.70				**0.92**
BICYCLE (by Direction)	1				0				0				0				**1**
PED (by Direction) *	0				0				0				0				**0**
	NORTH-END				SOUTH-END				EAST-END				WEST-END				
PED (by Leg) *	0				0				0				0				**0**

TEL: (510) 232 - 1271 FAX: (510) 232 - 1272

* Included Jay-Walk

B.A.Y.M.E.T.R.I.C.S.

PEDESTRIAN & BICYCLE MOVEMENT SUMMARY

PROJECT:	JUVENILE JUSTICE CENTER TRAFFIC COUNTS	**SURVEY DATE:**	7/14/2015	**DAY:**	TUESDAY
N-S APPROACH:	FAIRMONT DRIVE	**SURVEY PERIOD:**	4:00 PM	to	6:00 PM
E-W APPROACH:	NORTH ACCESS ROAD	**JURISDICTION:**	ALAMEDA COUNTY	**FILE:**	3507085-9A PM

PEAK HOUR SUMMARY

PEAK HOUR 04:30 PM TO 05:30 PM

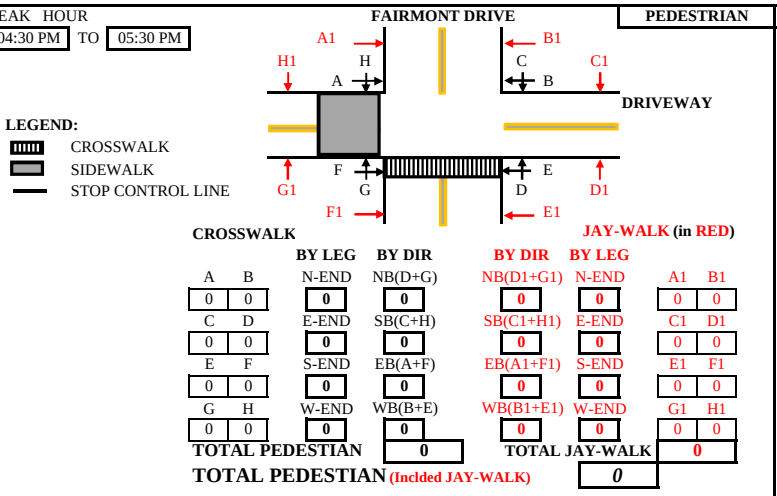

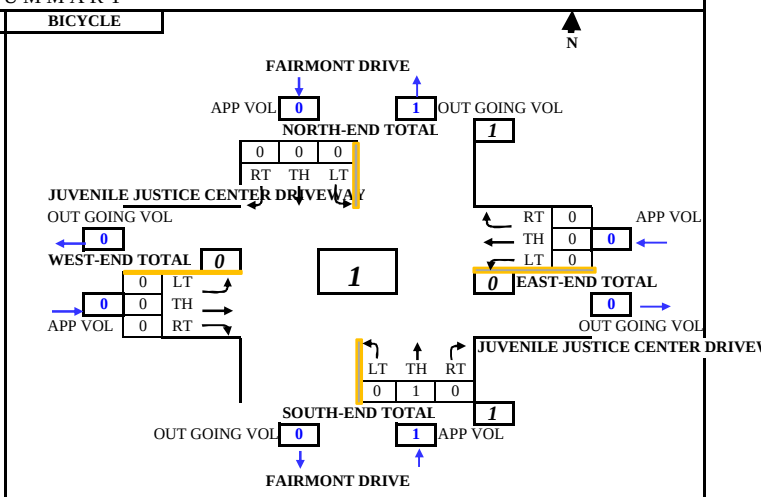

SURVEY DATA

TIME From	To	PEDESTRIAN @ CROSSWALK / STOP LINE N-END A	N-END B	E-END C	E-END D	S-END E	S-END F	W-END G	W-END H	TOTAL	JAY-WALK (From Intersection to Midblock) N-END A1	N-END B1	E-END C1	E-END D1	S-END E1	S-END F1	W-END G1	W-END H1	TOTAL	BICYCLE NB SOUTH-END LT	NB TH	NB RT	SB NORTH-END LT	SB TH	SB RT	EB WEST-END LT	EB TH	EB RT	WB EAST-END LT	WB TH	WB RT	TOTAL	OVER ALL TOTAL
04:00 PM	04:15 PM	0	0	0	0	1	1	0	0		0	0	0	0	0	0	0	0		0	0	0	0	0	0	0	0	0	0	0	0		2
04:15 PM	04:30 PM	0	0	0	0	2	1	0	0		0	0	0	0	0	0	0	0		0	0	0	0	0	0	0	0	0	0	0	0		3
04:30 PM	04:45 PM	0	0	0	0	2	1	0	0		0	0	0	0	0	0	0	0		0	0	0	0	0	0	0	0	0	0	0	0		3
04:45 PM	05:00 PM	0	0	0	0	2	1	0	0		0	0	0	0	0	0	0	0		0	1	0	0	0	0	0	0	0	0	0	0		4
05:00 PM	05:15 PM	0	0	0	0	2	1	0	0		0	0	0	0	0	0	0	0		0	1	0	0	0	0	0	0	0	0	0	0		4
05:15 PM	05:30 PM	0	0	0	0	2	1	0	0		0	0	0	0	0	0	0	0		0	1	0	0	0	0	0	0	0	0	0	0		4
05:30 PM	05:45 PM	0	0	0	0	2	2	0	0		0	0	0	0	0	0	0	0		0	2	0	0	1	0	0	0	0	0	0	0		7
05:45 PM	06:00 PM	0	0	0	0	2	3	0	0		0	0	0	0	0	0	0	0		0	3	0	0	1	0	0	0	0	0	0	0		9

TOTAL BY PERIOD

TIME From	To	N-END A	N-END B	E-END C	E-END D	S-END E	S-END F	W-END G	W-END H	TOTAL	N-END A1	N-END B1	E-END C1	E-END D1	S-END E1	S-END F1	W-END G1	W-END H1	TOTAL	NB LT	NB TH	NB RT	SB LT	SB TH	SB RT	EB LT	EB TH	EB RT	WB LT	WB TH	WB RT	TOTAL	OVER ALL TOTAL
04:00 PM	04:15 PM	0	0	0	0	1	1	0	0	2	0	0	0	0	0	0	0	0	0	0	0	0	0	0	0	0	0	0	0	0	0	0	2
04:15 PM	04:30 PM	0	0	0	0	1	0	0	0	1	0	0	0	0	0	0	0	0	0	0	0	0	0	0	0	0	0	0	0	0	0	0	1
04:30 PM	04:45 PM	0	0	0	0	0	0	0	0	0	0	0	0	0	0	0	0	0	0	0	0	0	0	0	0	0	0	0	0	0	0	0	0
04:45 PM	05:00 PM	0	0	0	0	0	0	0	0	0	0	0	0	0	0	0	0	0	0	0	1	0	0	0	0	0	0	0	0	0	0	1	1
05:00 PM	05:15 PM	0	0	0	0	0	0	0	0	0	0	0	0	0	0	0	0	0	0	0	0	0	0	0	0	0	0	0	0	0	0	0	0
05:15 PM	05:30 PM	0	0	0	0	0	0	0	0	0	0	0	0	0	0	0	0	0	0	0	0	0	0	0	0	0	0	0	0	0	0	0	0
05:30 PM	05:45 PM	0	0	0	0	0	1	0	0	1	0	0	0	0	0	0	0	0	0	0	1	0	0	1	0	0	0	0	0	0	0	2	3
05:45 PM	06:00 PM	0	0	0	0	0	1	0	0	1	0	0	0	0	0	0	0	0	0	0	1	0	0	0	0	0	0	0	0	0	0	1	2

HOURLY TOTALS

TIME From	To	N-END A	N-END B	E-END C	E-END D	S-END E	S-END F	W-END G	W-END H	TOTAL	N-END A1	N-END B1	E-END C1	E-END D1	S-END E1	S-END F1	W-END G1	W-END H1	TOTAL	NB LT	NB TH	NB RT	SB LT	SB TH	SB RT	EB LT	EB TH	EB RT	WB LT	WB TH	WB RT	TOTAL	OVER ALL TOTAL
04:00 PM	05:00 PM	0	0	0	0	2	1	0	0	3	0	0	0	0	0	0	0	0	0	0	1	0	0	0	0	0	0	0	0	0	0	1	4
04:15 PM	05:15 PM	0	0	0	0	1	0	0	0	1	0	0	0	0	0	0	0	0	0	0	1	0	0	0	0	0	0	0	0	0	0	1	2
04:30 PM	05:30 PM	0	0	0	0	0	0	0	0	0	0	0	0	0	0	0	0	0	0	0	1	0	0	0	0	0	0	0	0	0	0	1	1
04:45 PM	05:45 PM	0	0	0	0	0	1	0	0	1	0	0	0	0	0	0	0	0	0	0	2	0	0	1	0	0	0	0	0	0	0	3	4
05:00 PM	06:00 PM	0	0	0	0	0	2	0	0	2	0	0	0	0	0	0	0	0	0	0	2	0	0	1	0	0	0	0	0	0	0	3	5

SUMMARY (HOURLY COUNT)

TIME From	To	PEDESTRIAN COUNTS BY LEG* N-END	S-END	E-END	W-END	TOTAL	PEDESTRIAN COUNTS BY DIRECTION* NB	SB	EB	WB	TOTAL	BICYCLE COUNTS NB	SB	EB	WB	TOTAL
04:00 PM	05:00 PM	0	3	0	0	3	0	0	1	2	3	1	0	0	0	1
04:15 PM	05:15 PM	0	1	0	0	1	0	0	0	1	1	1	0	0	0	1
04:30 PM	05:30 PM	0	0	0	0	0	0	0	0	0	0	1	0	0	0	1
04:45 PM	05:45 PM	0	1	0	0	1	0	0	1	0	1	2	1	0	0	3
05:00 PM	06:00 PM	0	2	0	0	2	0	0	2	0	2	2	1	0	0	3

Tel : (510) 232-1271 *Fax: (510) 232-1272*

* Included Jay-Walk

Existing Camp Sweeney Driveway Counts - 08/12/2015

AM Peak Hour - 7:00 to 9:00 AM

Time period	*Cars In*	*Cars Out*	*Total*
7:00 to 7:15	5	0	5
7:15 to 7:30	2	0	2
7:30 to 7:45	1	2	3
7:45 to 8:00	3	1	4
8:00 to 8:15	2	0	2
8:15 to 8:30	1	2	3
8:30 to 8:45	1	1	2
8:45 to 9:00	3	2	5

Peak Hour - 7:00 to 8:00 AM			
Peak Hour Total	11	3	14

PM Peak Hour - 4:00 to 6:00 PM

Time period	*Cars In*	*Cars Out*	*Total*
4:00 to 4:15	1	2	3
4:15 to 4:30	0	0	0
4:30 to4:45	1	1	2
4:45 to 5:00	0	0	0
5:00 to 5:15	2	2	4
5:15 to 5:30	1	2	3
5:30 to 5:45	1	3	4
5:45 to 6:00	0	1	1

Peak Hour - 5:00 to 6:00 PM			
Peak Hour Total	4	8	12

INTERVAL	TIMING FUNCTION	Ø1	Ø2	Ø3	Ø4	Ø5	Ø6	Ø7	Ø8
0	WALK		5		6		6		
1	FLASHING DON'T WALK		9		13		13		
2	MINIMUM INITIAL	4	5		4	5	6		
3	TYPE 3 DET. DISCONNECT		12		0	0	12		
4	ADDED SEC./ACTUATION		1.2		0	0	1.2		
5	PASSAGE	2.5	2		2	2	2		
6	MAXIMUM GAP	4	3		3	3	3		
7	MINIMUM GAP	2	1		1	1	1		
8	MAXIMUM EXTENSION I	30	15		25	10	25		
9	MAXIMUM EXTENSION II								
A	MAXIMUM EXTENSION III								
B									
C	SEC. OF GAP REDUCED	0.1	0.1		0.1	0.1	0.1		
D	PER SEC. OF INTERVAL	1.0	1.0		1.0	0.8	1.0		
E	YELLOW	3	3.5		3	3	3.5		
F	RED CLEARANCE	0	0.5		0.5	0	0.5		

TURN ON	TIMING CHANGE BY:	REMARKS	FILE
1230BE		ALL RED FLASH	

DATE	DATE	Print Date	By	FILENAME	E#	OPERATION
JULY 18, '96		Jan 16,'07	VP	ALA-580-32.842.xls	E33BR	5ϕ

COUNTY	ROUTE	PM	CITY	INTERSECTION	PROGRAM
ALA	**580**	**32.842**	**SLn**	**150TH & FOOTHILL BLVD./RTE 580 W/B ON-RAMP**	**C8.4**

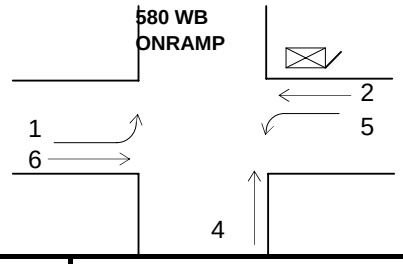

NOTE: To Initialize Controller: 1)Set Location & Feature Switches; 2) Clear RAM Location C-C-0 with STOP-TIME ON; 3) Enter Non-zero at C-C-1 to enter timing; 4)Enter 0 at C-C-1 to star

******SET REAL TIME CLOCK TO TELEPHONE TIME******

Modem Required

Master to Freedom

INTERVAL	FLAG FUNCTION	DISPLAY	Ø1	Ø2	Ø3	Ø4	Ø5	Ø6	Ø7	Ø8
0	PERMITTED PHASES	F 059	ON	ON		ON	ON	ON		
1	RED DETECTOR LOCK									
2	YELLOW DET. LOCK									
3	VEHICLE RECALL									
4	PEDESTRIAN RECALL									
5	PEDESTRIAN PHASES	F 042		ON		ON		ON		
6	OVERLAP A									
7	OVERLAP B									
8	DOUBLE ENTRY									
9	MAX EXT. II									
A	LAG PHASES	VIEW	***FOR OBSERVATION ONLY (SET LAG PHASES AT C-F-0 TO C-F-9)***							
B	RED REST									
C	NON ACTUATED									
D	MAXIMUM EXT. III									
E	START UP YELLOW									
F	FIRST PHASE GREEN	F 034		ON				ON		

EPROM BOARD - 412C

01/16/07

CHIP	PROGRAM	NUMBER	CHECKSUM	CHIP	PROGRAM	NUMBER	CHECKSUM
U1	C8.4	E# 74	4C46	U2	C8.4		

	1	2	3	4	5	6	7	8		1	2	3	4	5	6	7	8
LOCATION (1=ON)									FEATURE (1=ON)								
SWITCH (0=OFF)	0	0	0	0	0	0	0	0	SWITCH (0=OFF)	0	0	0	0	0	0	0	0

CODE	FUNCTION	ENTER	DISPLAY LAMPS	DISPLAY TIMING
F-0-E	MAXIMUM VARIABLE INITIAL	25 E		F 025
F-0-F	RED REVERT	20 E		F 02.0
F-D-0	TBCSEL	1 E		F 001
F-D-1	HOUR	0 E		F 000
F-D-2	MINUTE	0 E		F 000
F-D-8	OFFSET SEEKING FLAG	1 E		F 001
C-0-0	LOCAL ADDRESS	OBSERVE	ONLY	C 000
C-C-2	PC MASTER DOWNLOAD	0 E		C 000
C-F-C	COORDINATED FAZES	2 6	2 6	C 034
D-0-9	FEATURE (Set by Feature Switch)	OBSERVE	ONLY	d 000
F-C-F	RAM ACCESS/CLEAR	123 E		F123
D-4-1-	STRETCH 6J2U	1 E		d01.0
D-3-7	STRETCH 4I6U	1.5 E		d01.5
D-3-8	STRETCH 4I6L	1.5 E		d01.5
E-D-B	CHANGE 4I8U TO EXT	56	56	E048
E-F-5	CHANGE 6J4U TO EXT	56	56	E048
F-C-F	RAM ACCESS/CLEAR	0 E		F000
C-F-0	LAG FAZES "FREE"	2 4 6 8	2 4 6 8	C 170
C-F-1	LAG FAZES "PATTERN 1"	2 4 6 8	2 4 6 8	C 170
C-F-2	LAG FAZES "PATTERN 2"			C
C-F-3	LAG FAZES "PATTERN 3"	2 4 6 8	2 4 6 8	C 170
C-F-4	LAG FAZES "PATTERN 4"			C
C-F-5	LAG FAZES "PATTERN 5"			C
C-F-6	LAG FAZES "PATTERN 6"			C
C-F-7	LAG FAZES "PATTERN 7"			C
C-F-8	LAG FAZES "PATTERN 8"			C
C-F-9	LAG FAZES "PATTERN 9'			C

CODE	FUNCTION	ENTER	DISPLAY LAMPS	DISPLAY TIMING
	EV MAX TIMER	35		F035
	EVA HOLD TIME	5		F005
	EVC HOLD TIME	5		F005
	EVB HOLD TIME	5		F005
C-E-1	LAG PHASE Gap-Out "PATTERN 1"	E		C
C-E-2	LAG PHASE Gap-Out "PATTERN 2"	E		C
C-E-3	LAG PHASE Gap-Out "PATTERN 3"	E		C
C-E-4	LAG PHASE Gap-Out "PATTERN 4"	E		C
C-E-5	LAG PHASE Gap-Out "PATTERN 5"	E		C
C-E-6	LAG PHASE Gap-Out "PATTERN 6"	E		C
C-E-7	LAG PHASE Gap-Out "PATTERN 7"	E		C
C-E-8	LAG PHASE Gap-Out "PATTERN 8"	E		C
C-E-9	LAG PHASE Gap-Out "PATTERN 9"	E		C

County	Route	PM	City	Location
ALA	580	32.842	SLn	150TH & FOOTHILL BLVD./RTE 580 W/B ON-RAMP

PLAN 1

CODE	FUNCTION	ENTER	DISPLAY
C-1-0	CYC. LENG.	65 E	C 065
C-1-1	ϕ 1 SPLIT	19 E	C 019
C-1-2	ϕ 2 SPLIT	E	C
C-1-3	ϕ 3 SPLIT	E	C
C-1-4	ϕ 4 SPLIT	21 E	C 021
C-1-5	ϕ 5 SPLIT	8 E	C 008
C-1-6	ϕ 6 SPLIT	E	C
C-1-7	ϕ 7 SPLIT	E	C
C-1-8	ϕ 8 SPLIT	E	C
C-1-A	OFFSET A	20 E	C 020
C-1-B	OFFSET B	E	C
C-1-C	OFFSET C	E	C

PLAN 2

CODE	FUNCTION	ENTER	DISPLAY
C-2-0	CYC. LENG.	E	C
C-2-1	ϕ 1 SPLIT	E	C
C-2-2	ϕ 2 SPLIT	E	C
C-2-3	ϕ 3 SPLIT	E	C
C-2-4	ϕ 4 SPLIT	E	C
C-2-5	ϕ 5 SPLIT	E	C
C-2-6	ϕ 6 SPLIT	E	C
C-2-7	ϕ 7 SPLIT	E	C
C-2-8	ϕ 8 SPLIT	E	C
C-2-A	OFFSET A	E	C 000
C-2-B	OFFSET B	E	C
C-2-C	OFFSET C	E	C

PLAN 3

CODE	FUNCTION	ENTER	DISPLAY
C-3-0	CYC. LENG.	70 E	C 070
C-3-1	ϕ 1 SPLIT	23 E	C 023
C-3-2	ϕ 2 SPLIT	E	C
C-3-3	ϕ 3 SPLIT	E	C
C-3-4	ϕ 4 SPLIT	22 E	C 022
C-3-5	ϕ 5 SPLIT	8 E	C 008
C-3-6	ϕ 6 SPLIT	E	C
C-3-7	ϕ 7 SPLIT	E	C
C-3-8	ϕ 8 SPLIT	E	C
C-3-A	OFFSET A	23 E	C 023
C-3-B	OFFSET B	E	C
C-3-C	OFFSET C	E	C

PLAN 4

CODE	FUNCTION	ENTER	DISPLAY
C-4-0	CYC. LENG.	E	C
C-4-1	ϕ 1 SPLIT	E	C
C-4-2	ϕ 2 SPLIT	E	C
C-4-3	ϕ 3 SPLIT	E	C
C-4-4	ϕ 4 SPLIT	E	C
C-4-5	ϕ 5 SPLIT	E	C
C-4-6	ϕ 6 SPLIT	E	C
C-4-7	ϕ 7 SPLIT	E	C
C-4-8	ϕ 8 SPLIT	E	C
C-4-A	OFFSET A	E	C 000
C-4-B	OFFSET B	E	C
C-4-C	OFFSET C	E	C

PLAN 5

CODE	FUNCTION	ENTER	DISPLAY
C-5-0	CYC. LENG.	E	C
C-5-1	ϕ 1 SPLIT	E	C
C-5-2	ϕ 2 SPLIT	E	C
C-5-3	ϕ 3 SPLIT	E	C
C-5-4	ϕ 4 SPLIT	E	C
C-5-5	ϕ 5 SPLIT	E	C
C-5-6	ϕ 6 SPLIT	E	C
C-5-7	ϕ 7 SPLIT	E	C
C-5-8	ϕ 8 SPLIT	E	C
C-5-A	OFFSET A	E	C 000
C-5-B	OFFSET B	E	C
C-5-C	OFFSET C	E	C

PLAN 6

CODE	FUNCTION	ENTER	DISPLAY
C-6-0	CYC. LENG.	E	C
C-6-1	ϕ 1 SPLIT	E	C
C-6-2	ϕ 2 SPLIT	E	C
C-6-3	ϕ 3 SPLIT	E	C
C-6-4	ϕ 4 SPLIT	E	C
C-6-5	ϕ 5 SPLIT	E	C
C-6-6	ϕ 6 SPLIT	E	C
C-6-7	ϕ 7 SPLIT	E	C
C-6-8	ϕ 8 SPLIT	E	C
C-6-A	OFFSET A	E	C 000
C-6-B	OFFSET B	E	C
C-6-C	OFFSET C	E	C

PLAN 7

CODE	FUNCTION	ENTER	DISPLAY
C-7-0	CYC. LENG.	E	C
C-7-1	ϕ 1 SPLIT	E	C
C-7-2	ϕ 2 SPLIT	E	C
C-7-3	ϕ 3 SPLIT	E	C
C-7-4	ϕ 4 SPLIT	E	C
C-7-5	ϕ 5 SPLIT	E	C
C-7-6	ϕ 6 SPLIT	E	C
C-7-7	ϕ 7 SPLIT	E	C
C-7-8	ϕ 8 SPLIT	E	C
C-7-A	OFFSET A	E	C 000
C-7-B	OFFSET B	E	C
C-7-C	OFFSET C	E	C

PLAN 8

CODE	FUNCTION	ENTER	DISPLAY
C-8-0	CYC. LENG.	E	C
C-8-1	ϕ 1 SPLIT	E	C
C-8-2	ϕ 2 SPLIT	E	C
C-8-3	ϕ 3 SPLIT	E	C
C-8-4	ϕ 4 SPLIT	E	C
C-8-5	ϕ 5 SPLIT	E	C
C-8-6	ϕ 6 SPLIT	E	C
C-8-7	ϕ 7 SPLIT	E	C
C-8-8	ϕ 8 SPLIT	E	C
C-8-A	OFFSET A	E	C 000
C-8-B	OFFSET B	E	C
C-8-C	OFFSET C	E	C

PLAN 9

CODE	FUNCTION	ENTER	DISPLAY
C-9-0	CYC. LENG.	E	C
C-9-1	ϕ 1 SPLIT	E	C
C-9-2	ϕ 2 SPLIT	E	C
C-9-3	ϕ 3 SPLIT	E	C
C-9-4	ϕ 4 SPLIT	E	C
C-9-5	ϕ 5 SPLIT	E	C
C-9-6	ϕ 6 SPLIT	E	C
C-9-7	ϕ 7 SPLIT	E	C
C-9-8	ϕ 8 SPLIT	E	C
C-9-A	OFFSET A	E	C 000
C-9-B	OFFSET B	E	C
C-9-C	OFFSET C	E	C

COORD MAX RECALL

CODE	PLAN	ENTER	CALL LAMPS	TIMING DATA
D-D-1	1			d
D-D-2	2			d
D-D-3	3			d
D-D-4	4			d
D-D-5	5			d
D-D-6	6			d
D-D-7	7			d
D-D-8	8			d
D-D-9	9			d

COORD MIN RECALL

CODE	PLAN	ENTER	CALL LAMPS	TIMING DATA
D-E-1	1			d
D-E-2	2			d
D-E-3	3			d
D-E-4	4			d
D-E-5	5			d
D-E-6	6			d
D-E-7	7			d
D-E-8	8			d
D-E-9	9			d

COORD PED RECALL

CODE	PLAN	ENTER	CALL LAMPS	TIMING DATA
D-F-1	1			d
D-F-2	2			d
D-F-3	3			d
D-F-4	4			d
D-F-5	5			d
D-F-6	6			d
D-F-7	7			d
D-F-8	8			d
D-F-9	9			d

01/16/07

ALA	580	32.842	SLn	150TH & FOOTHILL BLVD./RTE 580 W/B ON-RAMP
County	Route	PM	City	Location

CONTROL CODE "7"

TIME OF DAY ACTIVITY TABLE

KEY STROKES 7 + EVENT # + HOUR + MIN + ACT CODE + "E" + ON/OFF + DOW LTS

EVENT #	TIME	ACTIVITY CODE	DEPRESS "E"	ON/OFF	DAY OF THE WEEK SET DISPLAY LIGHTS 1-7						
				LIGHT	SUN	MON	TUE	WED	THUR	FRI	SAT
				0	1	2	3	4	5	6	7
0			E								
1			E								
2			E								
3			E								
4			E								
5			E								
6			E								
7			E								
8			E								
9			E								
A			E								
B			E								
C			E								
D			E								
E			E								
F			E								

CONTROL CODE "9"

TIME OF DAY SELECTION FOR COORDINATED CONTROL PLANS

KEY STROKES 9 + EVENT # + HOUR + MIN + Control Plan + Offset + "E" + DOW LTS

DATE	BY	EVENT #	TIME	CONTROL PLAN	OFFSET	DEPRESS "E"	DAY OF THE WEEK SET DISPLAY LIGHTS 1-7						
							SUN	MON	TUE	WED	THUR	FRI	SAT
							1	2	3	4	5	6	7
		0	**1430**	**1**	**A**	E		X	X	X	X	X	
		1	**1530**	**3**	**A**	E		X	X	X	X	X	
		2	**1830**	**E**	**A**	E		X	X	X	X	X	
		3				E							
		4				E							
		5				E							
		6				E							
		7				E							
		8				E							
		9				E							
		A				E							
		B				E							
		C				E							
		D				E							
		E				E							
		F				E							

01/16/07

"7" KEY ACTIVITY CODE

1=TYPE OF SIMULTANEOUS PHASE TERMINATION
2=MAX 2 FAZES
3=MAX 3 FAZES
4=CONDITIONAL SERVICE (1ST SELECT) FAZES SET AT E-F-0
5=CONDITIONAL SERVICE (2ND SELECT) FAZES SET AT E-F-1
6=ENERGIZE AUX 6 RED
7=ENERGIZE AUX 6 GREEN
8=ENERGIZE AUX 6 YELLOW
9=CONSTANT CALL ON FAZES SET AT D-F-A
A=TRAFFIC ACTUATED MAX 2 OPERATION
B=CONSTANT CALL ON FAZES SET AT D-F-B
C=YELLOW YIELD COORDINATION
D=YELLOW YIELD COORDINATION
E=COORD FREE IF F-D-4 = 0
F=FLASHING OPERATION

ALA	580	32.842	SLn	150TH & FOOTHILL BLVD./RTE 580 W/B ON-RAMP
County	Route	PM	City	Location

INPUT FILE - 332 CABINET

1/16/2007

1	2	3	4	5	6	7	8	9	10	11	12	13	14
1I1U EX,CT 1I10U TB2 1,2 F-C1/56 D E	**2I2U** EX,CT 2I11U TB2 5,6 F-C1/39 D E	**2I3U** EX,CT 2I13U TB2 9,10 F-C1/63 D E	**2I4U** CL,T3 2I15U TB4 1,2 F-C1/47 D E	**3I5U** EX,CT 3I16U TB4 5,6 F-C1/58 D E	**4I6U** EX,CT 4I17U TB4 9,10 F-C1/41 D E	**4I7U** EX,CT 4I19U TB6 1,2 F-C1/65 D E	**4I8U** CL,T3 4I1BU TB6 5,6 F-C1/49 D E	**1I9U** EX,CT 1I1CU TB6 9,10 F-C1/60 D E	F D E	**MANUAL** TB8 1,3 F-C1/80 D E	**2-PPB** 2I1E TB8 4,6 F-C1-67 D E	**6-PPB** 6I2E TB8 7,9 F-C1/68 D E	**FLASH SENSE** TB8 10,12 F-C1/81 D E
1I1L EX,CT 1I10L TB2 3,4 W-C1/56 J K	**2I2L** EX,CT 2I12L TB2 7,8 W-C1/43 J K	**2I3L** EX 2I14L TB2 11,12 W-C1/76 J K	**2I4L** CL,T3 2I15L TB4 3,4 W-C1/47 J K	**3I5L** EX,CT 3I16L TB4 7,8 W-C1/58 J K	**4I6L** EX,CT 4I18L TB4 11,12 W-C1/45 J K	**4I7L** EX 4I1AL TB6 3,4 W-C1/78 J K	**4I8L** CL,T3 4I1BL TB6 7,8 W-C1/49 J K	**3I9L** EX,CT 3I1DL TB6 11,12 W-C1/62 J K	W J K	**SPARE 1** TB8 2,3 W-C1/53 J K	**4-PPB** 4I1F TB8 5,6 W-C1/69 J K	**8-PPB** 8I2F TB8 8,9 W-C1/70 J K	**STOP TIME** TB8 11,12 W-C1/82 J K
5J1U EX,CT 5J20U TB3 1,2 F-C1/55 D E	**6J2U** EX,CT 6J21U TB3 5,6 F-C1/40 D E	**6J3U** EX,CT 6J23U TB3 9,10 F-C1/64 D E	**6J4U** CL,T3 6J25U TB5 1,2 F-C1/48 D E	**7J5U** EX,CT 7J26U TB5 5,6 F-C1/57 D E	**8J6U** EX,CT 8J27U TB5 9,10 F-C1/42 D E	**8J7U** EX,CT 8J29U TB7 1,2 F-C1/66 D E	**8J8U** CL,T3 8J2BU TB7 5,6 F-C1/50 D E	**5J9U** EX,CT 5J2CU TB7 9,10 F-C1/59 D E	F D E	**SPARE 2** TB9 1,3 F-C1/54 D E	**EVA PREMT Ø2 & Ø5** TB9 4,2,6 D-Yellow E-Orange K-Blu+Shl	**EVB PREMT Ø4 & Ø7** TB9 7,3,9 D-Yellow E-Orange K-Blu+Shl	**RR1 PREMT ϕ2 & ϕ5** TB9 10,12 F-C1/51 D E
5J1L EX,CT 5J20L TB3 3,4 W-C1/55 J K	**6J2L** EX,CT 6J22L TB3 7,8 W-C1/44 J K	**6J3L** EX 6J24L TB3 11,12 W-C1/77 J K	**6J4L** CL,T3 6J25L TB5 3,4 W-C1/48 J K	**7J5L** EX,CT 7J26L TB5 7,8 W-C1/57 J K	**8J6L** EX,CT 8J28L TB5 11,12 W-C1/46 J K	**8J7L** EX 8J2AL TB7 3,4 W-C1/79 J K	**8J8L** CL,T3 8J2BL TB7 7,8 W-C1/50 J K	**7J9L** EX,CT 7J2DL TB7 11,12 W-C1/61 J K	W J K	**SPARE 3** TB9 2,3 W-C1/75 J K	**EVC PREMT Ø6 & Ø1** TB9 5,2,6 J-Yellow E-Orange K-Blu+Shl	**EVD PREMT Ø8 & Ø3** TB9 8,3,9 J-Yellow E-Orange K-Blu+Shl	**RR2 PREMT ϕ4 & ϕ7** TB9 11,12 W-C1/52 J K

OUTPUT FILE

Ø1	Ø2	Ø2P	Ø3	Ø4	Ø4P
R-125 C1/16	R-128 C1/12	R-113 C1/10	R-116 C1/7	R-101 C1/4	R-104 C1/2
Y-126 C1/17	Y-129 C1/13	Y-114 C1/35	Y-117 C1/8	Y-102 C1/5	Y-105 C1/37
G-127 C1/18	G-130 C1/15	G-115 C1/11	G-118 C1/9	G-103 C1/6	G-106 C1/3
Ø5	**Ø6**	**Ø6P**	**Ø7**	**Ø8**	**Ø8P**
R-131 C1/32	R-134 C1/29	R-119 C1/27	R-122 C1/24	R-107 C1/21	R-110 C1/19
Y-132 C1/33	Y-135 C1/30	Y-120 C1/36	Y-123 C1/25	Y-108 C1/22	Y-111 C1/38
G-133 C1/34	G-136 C1/31	G-121 C1/28	G-124 C1/26	G-109 C1/23	G-112 C1/20

AUXILIARY

A1(OL'C)	A2(OL'D)	A3	A4(OL'A)	A5(OL'B)	A6
R-A121 C1/97	R-A124 C1/94	R-A111 C1/91	R-A114 C1/88	R-A101 C1/85	R-A104 C1/84
Y-A122 C1/98	Y-A125 C1/95	Y-A112 C1/101	Y-A115 C1/89	Y-A102 C1/86	Y-A105 C1/100
G-A123 C1/99	G-A126 C1/96	G-A113 C1/93	G-A116 C1/90	G-A103 C1/87	G-A106 C1/83

ALA	580	32.842	SLn	150TH & FOOTHILL BLVD./RTE 580 W/B ON-RAMP
County	Route	PM	City	Location

DIODE CARD

01/16/07

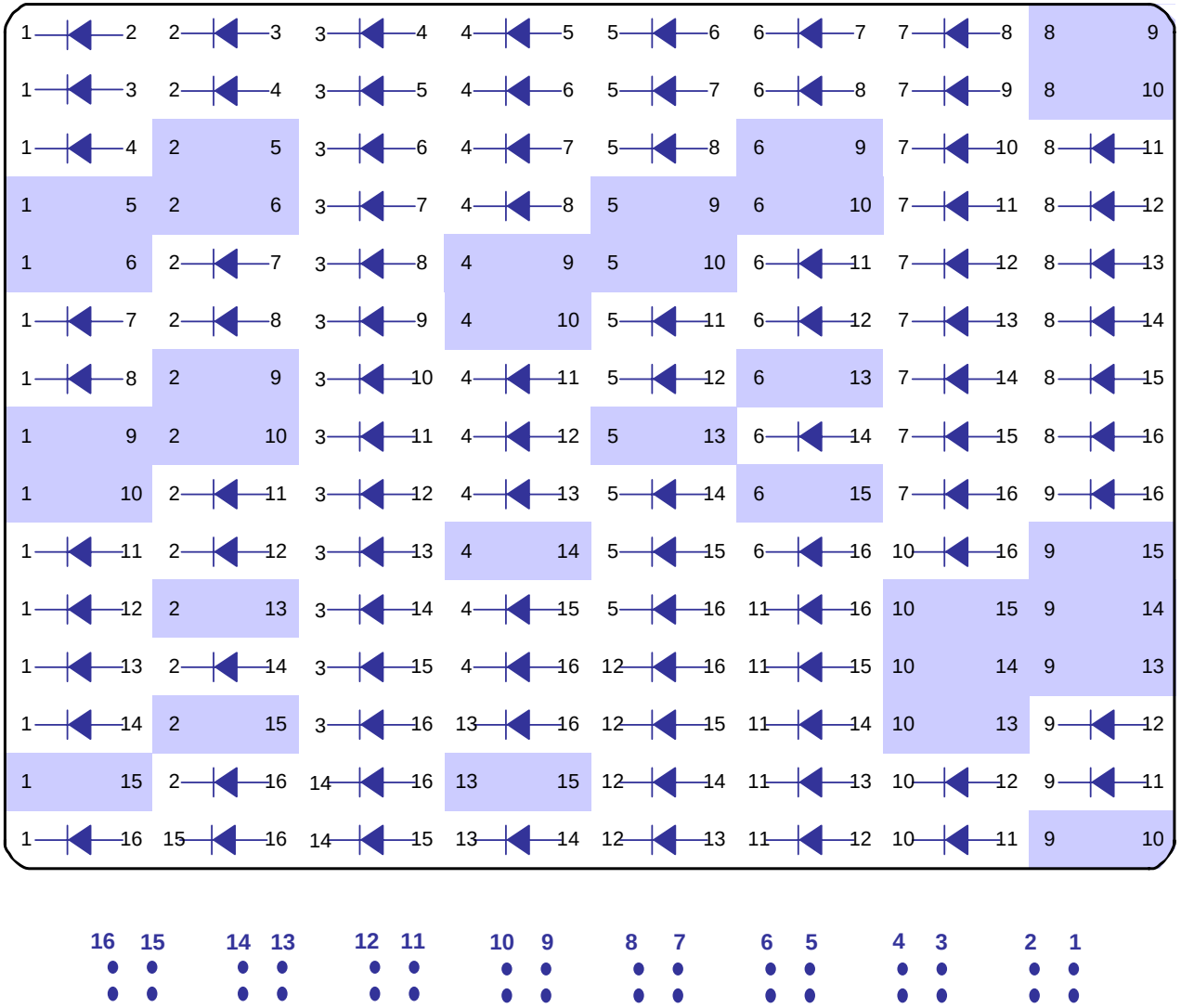

CHANNEL	PIN	LOAD SWITCH ASSIGNMENT		PIN
1	9	Ø1 Y	Ø1 G	J
2	1	Ø2 G	Ø2 Y	A
3	12	Ø3 Y	Ø3 G	M
4	4	Ø4 G	Ø4 Y	D
5	7	Ø5 G	Ø5 Y	H
6	3	Ø6 Y	Ø6 G	B
7	10	Ø7 G	Ø7 Y	L
8	6	Ø8 Y	Ø8 G	E
9G	13	Ø2P Y		
9Y	16	Ø4P Y		
10G			Ø6P Y	R
10Y			Ø8P Y	U
11G			N/U	S
11Y	15	N/U		
12G			N/U	V
12Y	18	N/U		
13G	2	Ø2P G		
13Y	8	N/U		
14G	5	Ø4P G		
14Y	11	N/U		
15G			Ø6P G	C
15Y			N/U	K
16G			Ø8P G	F
16Y			N/U	N

ALA	580	32.842	SLn	150TH & FOOTHILL BLVD./RTE 580 W/B ON-RAMP
County	Route	PM	City	Location

FIELD INPUT/OUTPUT TERMINALS

FIELD INPUT TERMINALS

01/16/07

TB-2	loops
1 & 2	1I1U
3 & 4	1I1L
5 & 6	2I2U
7 & 8	2I2L
9 & 10	2I3U
11 & 12	2I3L

TB-3	loops
1 & 2	5J1U
3 & 4	5J1L
5 & 6	6J2U
7 & 8	6J2L
9 & 10	6J3U
11 & 12	6J3L

TB-8	peds
1	MANUAL
2	SPARE 1
3	COM
4	2-PPB
5	4-PPB
6	2-PPB & 4-PPB COM
7	6-PPB
8	8-PPB
9	6-PPB & 8-PPB COM

TB-4	loops
1 & 2	2I4U
3 & 4	2I4L
5 & 6	3I5U
7 & 8	3I5L
9 & 10	4I6U
11 & 12	4I6L

TB-5	loops
1 & 2	6J4U
3 & 4	6J4L
5 & 6	7J5U
7 & 8	7J5L
9 & 10	8J6U
11 & 12	8J6L

TB-9		emergency pre-emp.
1-SP2		
2-EV A & C PWR.	** SP3	→ ORN Wires to EV A & C
3-EV B & D Pwr.	** COM	→ ORN Wires to EV B & D
4-EVA Actuation		→ YEL Wire to EV A
5-EVC Actuation		→ YEL Wire to EV C
6-EV A & C COM		→ Blu+shields to EV A & C
7-EVB Actuation		→ YEL Wire to EV B
8-EVD Actuation		→ YEL Wire to EV D
9-EV B & D COM		→ Blu+shields to EV B & D
10-RR1		
11-RR2		
12-COM		

TB-6	loops
1 & 2	4I7U
3 & 4	4I7L
5 & 6	4I8U
7 & 8	4I8L
9 & 10	1I9U
11 & 12	3I9L

TB-7	loops
1 & 2	8J7U
3 & 4	8J7L
5 & 6	8J8U
7 & 8	8J8L
9 & 10	5J9U
11 & 12	7J9L

**J11-J to J12-E / J11-K to J13-E for opto probe pwr.

FIELD OUTPUT TERMINALS

101	Ø4	- RED	113	Ø2P	- DON'T WALK	125	Ø1	- RED
102	Ø4	- YELLOW	114	OL'A	- GREEN	126	Ø1	- YELLOW
103	Ø4	- GREEN	115	Ø2P	- WALK	127	Ø1	- GREEN
104	Ø4P	- DON'T WALK	116	Ø3	- RED	128	Ø2	- RED
105	OL'A	- YELLOW	117	Ø3	- YELLOW	129	Ø2	- YELLOW
106	Ø4P	- WALK	118	Ø3	- GREEN	130	Ø2	- GREEN
107	Ø8	- RED	119	Ø6P	- DON'T WALK	131	Ø5	- RED
108	Ø8	- YELLOW	120	OL'B	- GREEN	132	Ø5	- YELLOW
109	Ø8	- GREEN	121	Ø6P	- WALK	133	Ø5	- GREEN
110	Ø8P	- DON'T WALK	122	Ø7	- RED	134	Ø6	- RED
111	OL'B	- YELLOW	123	Ø7	- YELLOW	135	Ø6	- YELLOW
112	Ø8P	- WALK	124	Ø7	- GREEN	136	Ø6	- GREEN

AUX. FIELD OUTPUT TERMINALS

A101	A5(OL'B)	- RED	A111	A3	- RED	A121	A1(OL'C)	- RED
A102	A5(OL'B)	- YELLOW	A112	A3	- YELLOW	A122	A1(OL'C)	- YELLOW
A103	A5(OL'B)	- GREEN	A113	A3	- GREEN	A123	A1(OL'C)	- GREEN
A104	A6	- RED	A114	A4(OL'A)	- RED	A124	A2(OL'D)	- RED
A105	A6	- YELLOW	A115	A4(OL'A)	- YELLOW	A125	A2(OL'D)	- YELLOW
A106	A6	- GREEN	A116	A4(OL'A)	- GREEN	A126	A2(OL'D)	- GREEN

ALA	580	32.842	SLn	150TH & FOOTHILL BLVD./RTE 580 W/B ON-RAMP
County	Route	PM	City	Location

INTERVAL	TIMING FUNCTION	Ø1	Ø2	Ø3	Ø4	Ø5	Ø6	Ø7	Ø8
0	WALK		7		7		7		
1	FLASHING DON'T WALK		10		15		12		
2	MINIMUM INITIAL	4	8	4	4	4	6	4	4
3	TYPE 3 DET. DISCONNECT		12				15		
4	ADDED SEC./ACTUATION	0	1	0	0	0	1	0	0
5	PASSAGE	1	4	2	2	1	4	1	1
6	MAXIMUM GAP	1	5	3	3	1	5	1	1
7	MINIMUM GAP	1	3	1	1.5	1	3	1	1
8	MAXIMUM EXTENSION I	5	19	11	36	5	21	5	5
9	MAXIMUM EXTENSION II				46				
A	MAXIMUM EXTENSION III								
B									
C	SEC. OF GAP REDUCED	0.1	0.1	0.1	0.1	0.1	0.1	0.1	0.1
D	PER SEC. OF INTERVAL	0.8	1.0	0.8	1.5	0.8	1.0	0.8	0.8
E	YELLOW	3	3.5	3	3	3	3.5	3	3
F	RED CLEARANCE	1	0.5	0	0.5	1	0.5	1	1

TURN ON	TIMING CHANGE BY:	REMARKS	FILE
1600 TJW		ALL RED FLASH	

DATE	DATE	Print Date	By	FILENAME	E#	OPERATION
Jan 03, '88		Aug 24,'15	OY	ALA-580-32.8.xls		

COUNTY	ROUTE	PM	CITY	INTERSECTION	PROGRAM
ALA	**580**	**32.844**	**San Leandro**	**150th/Freedom & Rte 580 E/B Off-ramp**	**C8.4**

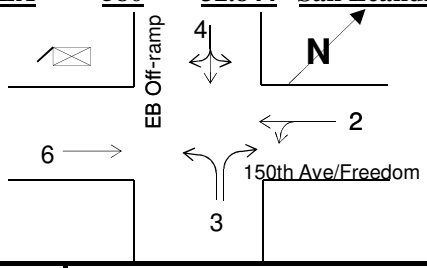

NOTE: To Initialize Controller: 1)Set Location & Feature Switches; 2) Clear RAM Location C-C-0 with STOP-TIME ON; 3) Enter Non-zero at C-C-1 to enter timing; 4)Enter 0 at C-C-1 to star

******SET REAL TIME CLOCK TO TELEPHONE TIME******

*Master @ Foothill / Modem Required

* Set location SW #1 On.

INTERVAL	FLAG FUNCTION	DISPLAY	Ø1	Ø2	Ø3	Ø4	Ø5	Ø6	Ø7	Ø8
0	PERMITTED PHASES	F 046		ON	ON	ON		ON		
1	RED DETECTOR LOCK									
2	YELLOW DET. LOCK									
3	VEHICLE RECALL	F 034		ON				ON		
4	PEDESTRIAN RECALL									
5	PEDESTRIAN PHASES	F 042		ON		ON		ON		
6	OVERLAP A									
7	OVERLAP B									
8	DOUBLE ENTRY									
9	MAX EXT. II	F 008				ON				
A	LAG PHASES	VIEW	***FOR OBSERVATION ONLY (SET LAG PHASES AT C-F-0 TO C-F-9)***							
B	RED REST									
C	NON ACTUATED									
D	MAXIMUM EXT. III									
E	START UP YELLOW									
F	FIRST PHASE GREEN	F 034		ON				ON		

EPROM BOARD - 412C

08/24/15

CHIP	PROGRAM	NUMBER	CHECKSUM	CHIP	PROGRAM	NUMBER	CHECKSUM
U1	C8.4	E# 74	0110	U2	C8.4	D# 74	4B36

	1	2	3	4	5	6	7	8		1	2	3	4	5	6	7	8
LOCATION (1=ON)									FEATURE (1=ON)								
SWITCH (0=OFF)	1	0	0	0	0	0	0	0	SWITCH (0=OFF)	0	0	0	0	0	0	0	0

CODE	FUNCTION	ENTER	DISPLAY LAMPS	DISPLAY TIMING
F-0-E	MAXIMUM VARIABLE INITIAL	25 E		F 025
F-0-F	RED REVERT	20 E		F 02.0
F-D-0	TBCSEL	1 E		F 001
F-D-1	HOUR	0 E		F 000
F-D-2	MINUTE	0 E		F 000
F-D-8	OFFSET SEEKING FLAG	1 E		F 001
C-0-0	LOCAL ADDRESS	OBSERVE	ONLY	C 001
C-C-2	PC MASTER DOWNLOAD	1 E		C 001
C-F-C	COORDINATED FAZES	2 6	2 6	C 034
D-0-9	FEATURE (Set by Feature Switch)	OBSERVE	ONLY	d 000
F-C-F	RAM PAGE ACCESS	123		
D-1-d	DELAY 3I9L	100 E		d10.0
D-3-2	STRETCH 2I2L	5 E		d00.5
D-3-1	STRETCH 2I2U	5		d00.5
F-C-F	RAM ACCESS	0 E		F000
C-F-0	LAG FAZES "FREE"	2 4 6 8	2 4 6 8	C 170
C-F-1	LAG FAZES "PATTERN 1"	2 4 6 8	2 4 6 8	C 170
C-F-2	LAG FAZES "PATTERN 2"			C
C-F-3	LAG FAZES "PATTERN 3"	2 4 6 8	2 4 6 8	C 170
C-F-4	LAG FAZES "PATTERN 4"			C
C-F-5	LAG FAZES "PATTERN 5"			C
C-F-6	LAG FAZES "PATTERN 6"			C
C-F-7	LAG FAZES "PATTERN 7"			C
C-F-8	LAG FAZES "PATTERN 8"			C
C-F-9	LAG FAZES "PATTERN 9"			C

CODE	FUNCTION	ENTER	DISPLAY LAMPS	DISPLAY TIMING
F-E-3	EVA HOLD	5 E		F005
F-E-5	EVB HOLD	5 E		F005
F-E-7	EVC HOLD	5 E		F005
F-E-9	EVD HOLD	5 E		F005
F-E-0	MAX HOLD TIME	35 E		F035
F-C-0	NO. OF SEQ. GABS TO MAXI	3 E		F003
F-C-1	NO. PF SEQ. MAXI TO MAXII	2 E		F002
C-E-1	LAG PHASE Gap-Out "PATTERN 1"	E		C
C-E-2	LAG PHASE Gap-Out "PATTERN 2"	E		C
C-E-3	LAG PHASE Gap-Out "PATTERN 3"	E		C
C-E-4	LAG PHASE Gap-Out "PATTERN 4"	E		C
C-E-5	LAG PHASE Gap-Out "PATTERN 5"	E		C
C-E-6	LAG PHASE Gap-Out "PATTERN 6"	E		C
C-E-7	LAG PHASE Gap-Out "PATTERN 7"	E		C
C-E-8	LAG PHASE Gap-Out "PATTERN 8"	E		C
C-E-9	LAG PHASE Gap-Out "PATTERN 9"	E		C

ALA	580	32.844	San Leandro	150th/Freedom & Rte 580 E/B Off-ramp
County	Route	PM	City	Location

PLAN 1

CODE	FUNCTION	ENTER	DISPLAY
C-1-0	CYC. LENG.	65 E	C 065
C-1-1	ϕ 1 SPLIT	E	C
C-1-2	ϕ 2 SPLIT	E	C
C-1-3	ϕ 3 SPLIT	9 E	C 009
C-1-4	ϕ 4 SPLIT	22 E	C 022
C-1-5	ϕ 5 SPLIT	E	C
C-1-6	ϕ 6 SPLIT	E	C
C-1-7	ϕ 7 SPLIT	E	C
C-1-8	ϕ 8 SPLIT	E	C
C-1-A	OFFSET A	0 E	C 000
C-1-B	OFFSET B	E	C
C-1-C	OFFSET C	E	C

PLAN 2

CODE	FUNCTION	ENTER	DISPLAY
C-2-0	CYC. LENG.	E	C
C-2-1	ϕ 1 SPLIT	E	C
C-2-2	ϕ 2 SPLIT	E	C
C-2-3	ϕ 3 SPLIT	E	C
C-2-4	ϕ 4 SPLIT	E	C
C-2-5	ϕ 5 SPLIT	E	C
C-2-6	ϕ 6 SPLIT	E	C
C-2-7	ϕ 7 SPLIT	E	C
C-2-8	ϕ 8 SPLIT	E	C
C-2-A	OFFSET A	E	C 000
C-2-B	OFFSET B	E	C
C-2-C	OFFSET C	E	C

PLAN 3

CODE	FUNCTION	ENTER	DISPLAY
C-3-0	CYC. LENG.	70 E	C 070
C-3-1	ϕ 1 SPLIT	E	C
C-3-2	ϕ 2 SPLIT	E	C
C-3-3	ϕ 3 SPLIT	9 E	C 009
C-3-4	ϕ 4 SPLIT	25 E	C 025
C-3-5	ϕ 5 SPLIT	E	C
C-3-6	ϕ 6 SPLIT	E	C
C-3-7	ϕ 7 SPLIT	E	C
C-3-8	ϕ 8 SPLIT	E	C
C-3-A	OFFSET A	0 E	C 000
C-3-B	OFFSET B	E	C
C-3-C	OFFSET C	E	C

PLAN 4

CODE	FUNCTION	ENTER	DISPLAY
C-4-0	CYC. LENG.	E	C
C-4-1	ϕ 1 SPLIT	E	C
C-4-2	ϕ 2 SPLIT	E	C
C-4-3	ϕ 3 SPLIT	E	C
C-4-4	ϕ 4 SPLIT	E	C
C-4-5	ϕ 5 SPLIT	E	C
C-4-6	ϕ 6 SPLIT	E	C
C-4-7	ϕ 7 SPLIT	E	C
C-4-8	ϕ 8 SPLIT	E	C
C-4-A	OFFSET A	E	C 000
C-4-B	OFFSET B	E	C
C-4-C	OFFSET C	E	C

PLAN 5

CODE	FUNCTION	ENTER	DISPLAY
C-5-0	CYC. LENG.	E	C
C-5-1	ϕ 1 SPLIT	E	C
C-5-2	ϕ 2 SPLIT	E	C
C-5-3	ϕ 3 SPLIT	E	C
C-5-4	ϕ 4 SPLIT	E	C
C-5-5	ϕ 5 SPLIT	E	C
C-5-6	ϕ 6 SPLIT	E	C
C-5-7	ϕ 7 SPLIT	E	C
C-5-8	ϕ 8 SPLIT	E	C
C-5-A	OFFSET A	E	C 000
C-5-B	OFFSET B	E	C
C-5-C	OFFSET C	E	C

PLAN 6

CODE	FUNCTION	ENTER	DISPLAY
C-6-0	CYC. LENG.	E	C
C-6-1	ϕ 1 SPLIT	E	C
C-6-2	ϕ 2 SPLIT	E	C
C-6-3	ϕ 3 SPLIT	E	C
C-6-4	ϕ 4 SPLIT	E	C
C-6-5	ϕ 5 SPLIT	E	C
C-6-6	ϕ 6 SPLIT	E	C
C-6-7	ϕ 7 SPLIT	E	C
C-6-8	ϕ 8 SPLIT	E	C
C-6-A	OFFSET A	E	C 000
C-6-B	OFFSET B	E	C
C-6-C	OFFSET C	E	C

PLAN 7

CODE	FUNCTION	ENTER	DISPLAY
C-7-0	CYC. LENG.	E	C
C-7-1	ϕ 1 SPLIT	E	C
C-7-2	ϕ 2 SPLIT	E	C
C-7-3	ϕ 3 SPLIT	E	C
C-7-4	ϕ 4 SPLIT	E	C
C-7-5	ϕ 5 SPLIT	E	C
C-7-6	ϕ 6 SPLIT	E	C
C-7-7	ϕ 7 SPLIT	E	C
C-7-8	ϕ 8 SPLIT	E	C
C-7-A	OFFSET A	E	C 000
C-7-B	OFFSET B	E	C
C-7-C	OFFSET C	E	C

PLAN 8

CODE	FUNCTION	ENTER	DISPLAY
C-8-0	CYC. LENG.	E	C
C-8-1	ϕ 1 SPLIT	E	C
C-8-2	ϕ 2 SPLIT	E	C
C-8-3	ϕ 3 SPLIT	E	C
C-8-4	ϕ 4 SPLIT	E	C
C-8-5	ϕ 5 SPLIT	E	C
C-8-6	ϕ 6 SPLIT	E	C
C-8-7	ϕ 7 SPLIT	E	C
C-8-8	ϕ 8 SPLIT	E	C
C-8-A	OFFSET A	E	C 000
C-8-B	OFFSET B	E	C
C-8-C	OFFSET C	E	C

PLAN 9

CODE	FUNCTION	ENTER	DISPLAY
C-9-0	CYC. LENG.	E	C
C-9-1	ϕ 1 SPLIT	E	C
C-9-2	ϕ 2 SPLIT	E	C
C-9-3	ϕ 3 SPLIT	E	C
C-9-4	ϕ 4 SPLIT	E	C
C-9-5	ϕ 5 SPLIT	E	C
C-9-6	ϕ 6 SPLIT	E	C
C-9-7	ϕ 7 SPLIT	E	C
C-9-8	ϕ 8 SPLIT	E	C
C-9-A	OFFSET A	E	C 000
C-9-B	OFFSET B	E	C
C-9-C	OFFSET C	E	C

COORD MAX RECALL

CODE	PLAN	ENTER	CALL LAMPS	TIMING DATA
D-D-1	1			d
D-D-2	2			d
D-D-3	3			d
D-D-4	4			d
D-D-5	5			d
D-D-6	6			d
D-D-7	7			d
D-D-8	8			d
D-D-9	9			d

COORD MIN RECALL

CODE	PLAN	ENTER	CALL LAMPS	TIMING DATA
D-E-1	1			d
D-E-2	2			d
D-E-3	3			d
D-E-4	4			d
D-E-5	5			d
D-E-6	6			d
D-E-7	7			d
D-E-8	8			d
D-E-9	9			d

COORD PED RECALL

CODE	PLAN	ENTER	CALL LAMPS	TIMING DATA
D-F-1	1			d
D-F-2	2			d
D-F-3	3			d
D-F-4	4			d
D-F-5	5			d
D-F-6	6			d
D-F-7	7			d
D-F-8	8			d
D-F-9	9			d

08/24/15

ALA	580	32.844	San Leandro	150th/Freedom & Rte 580 E/B Off-ramp
County	Route	PM	City	Location

CONTROL CODE "7"

TIME OF DAY ACTIVITY TABLE

KEY STROKES 7 + EVENT # + HOUR + MIN + ACT CODE + "E" + ON/OFF + DOW LTS

EVENT #	TIME	ACTIVITY CODE	DEPRESS "E"	ON/OFF	DAY OF THE WEEK SET DISPLAY LIGHTS 1-7						
				LIGHT	SUN	MON	TUE	WED	THUR	FRI	SAT
				0	1	2	3	4	5	6	7
0	**1630**	A	E	ON		X	X	X	X	X	
1	**1800**	A	E	OFF		X	X	X	X	X	
2			E								
3			E								
4			E								
5			E								
6			E								
7			E								
8			E								
9			E								
A			E								
B			E								
C			E								
D			E								
E			E								
F			E								

CONTROL CODE "9"

TIME OF DAY SELECTION FOR COORDINATED CONTROL PLANS

KEY STROKES 9 + EVENT # + HOUR + MIN + Control Plan + Offset + "E" + DOW LTS

DATE	BY	EVENT #	TIME	CONTROL PLAN	OFFSET	DEPRESS "E"	DAY OF THE WEEK SET DISPLAY LIGHTS 1-7						
							SUN	MON	TUE	WED	THUR	FRI	SAT
							1	2	3	4	5	6	7
		0	**1430**	**1**	**A**	E		X	X	X	X	X	
		1	**1530**	**3**	**A**	E		X	X	X	X	X	
		2	**1830**	**E**		E		X	X	X	X	X	
		3				E							
		4				E							
		5				E							
		6				E							
		7				E							
		8				E							
		9				E							
		A				E							
		B				E							
		C				E							
		D				E							
		E				E							
		F				E							

"7" KEY ACTIVITY CODE

1=TYPE OF SIMULTANEOUS PHASE TERMINATION
2=MAX 2 FAZES
3=MAX 3 FAZES
4=CONDITIONAL SERVICE (1ST SELECT) FAZES SET AT E-F-0
5=CONDITIONAL SERVICE (2ND SELECT) FAZES SET AT E-F-1
6=ENERGIZE AUX 6 RED
7=ENERGIZE AUX 6 GREEN
8=ENERGIZE AUX 6 YELLOW
9=CONSTANT CALL ON FAZES SET AT D-F-A
A=TRAFFIC ACTUATED MAX 2 OPERATION
B=CONSTANT CALL ON FAZES SET AT D-F-B
C=YELLOW YIELD COORDINATION
D=YELLOW YIELD COORDINATION
E=COORD FREE IF F-D-4 = 0
F=FLASHING OPERATION

08/24/15

ALA	580	32.844	San Leandro	150th/Freedom & Rte 580 E/B Off-ramp
County	Route	PM	City	Location

INPUT FILE - 332 CABINET

8/24/2015

1	2	3	4	5	6	7	8	9	10	11	12	13	14
1I1U EX,CT 1I10U TB2 1,2 F-C1/56 D E	**2I2U** EX,CT 2I11U TB2 5,6 F-C1/39 D E	**2I3U** EX,CT 2I13U TB2 9,10 F-C1/63 D E	**2I4U** CL,T3 2I15U TB4 1,2 F-C1/47 D E	**3I5U** EX,CT 3I16U TB4 5,6 F-C1/58 D E	**4I6U** EX,CT 4I17U TB4 9,10 F-C1/41 D E	**4I7U** EX,CT 4I19U TB6 1,2 F-C1/65 D E	**4I8U** CL,T3 4I1BU TB6 5,6 F-C1/49 D E	**1I9U** EX,CT 1I1CU TB6 9,10 F-C1/60 D E	F D E	**MANUAL** TB8 1,3 F-C1/80 D E	**2-PPB** 2I1E TB8 4,6 F-C1-67 D E	**6-PPB** 6I2E TB8 7,9 F-C1/68 D E	**FLASH SENSE** TB8 10,12 F-C1/81 D E
1I1L EX,CT 1I10L TB2 3,4 W-C1/56 J K	**2I2L** EX,CT 2I12L TB2 7,8 W-C1/43 J K	**2I3L** EX 2I14L TB2 11,12 W-C1/76 J K	**2I4L** CL,T3 2I15L TB4 3,4 W-C1/47 J K	**3I5L** EX,CT 3I16L TB4 7,8 W-C1/58 J K	**4I6L** EX,CT 4I18L TB4 11,12 W-C1/45 J K	**4I7L** EX 4I1AL TB6 3,4 W-C1/78 J K	**4I8L** CL,T3 4I1BL TB6 7,8 W-C1/49 J K	**3I9L** EX,CT 3I1DL TB6 11,12 W-C1/62 J K	W J K	**SPARE 1** TB8 2,3 W-C1/53 J K	**4-PPB** 4I1F TB8 5,6 W-C1/69 J K	**8-PPB** 8I2F TB8 8,9 W-C1/70 J K	**STOP TIME** TB8 11,12 W-C1/82 J K
5J1U EX,CT 5J20U TB3 1,2 F-C1/55 D E	**6J2U** EX,CT 6J21U TB3 5,6 F-C1/40 D E	**6J3U** EX,CT 6J23U TB3 9,10 F-C1/64 D E	**6J4U** CL,T3 6J25U TB5 1,2 F-C1/48 D E	**7J5U** EX,CT 7J26U TB5 5,6 F-C1/57 D E	**8J6U** EX,CT 8J27U TB5 9,10 F-C1/42 D E	**8J7U** EX,CT 8J29U TB7 1,2 F-C1/66 D E	**8J8U** CL,T3 8J2BU TB7 5,6 F-C1/50 D E	**5J9U** EX,CT 5J2CU TB7 9,10 F-C1/59 D E	F D E	**SPARE 2** TB9 1,3 F-C1/54 D E	**EVA PREMT Ø2 & Ø5** TB9 4,2,6 D-Yellow E-Orange K-Blu+Shl	**EVB PREMT Ø4 & Ø7** TB9 7,3,9 D-Yellow E-Orange K-Blu+Shl	**RR1 PREMT ϕ2 & ϕ5** TB9 10,12 F-C1/51 D E
5J1L EX,CT 5J20L TB3 3,4 W-C1/55 J K	**6J2L** EX,CT 6J22L TB3 7,8 W-C1/44 J K	**6J3L** EX 6J24L TB3 11,12 W-C1/77 J K	**6J4L** CL,T3 6J25L TB5 3,4 W-C1/48 J K	**7J5L** EX,CT 7J26L TB5 7,8 W-C1/57 J K	**8J6L** EX,CT 8J28L TB5 11,12 W-C1/46 J K	**8J7L** EX 8J2AL TB7 3,4 W-C1/79 J K	**8J8L** CL,T3 8J2BL TB7 7,8 W-C1/50 J K	**7J9L** EX,CT 7J2DL TB7 11,12 W-C1/61 J K	W J K	**SPARE 3** TB9 2,3 W-C1/75 J K	**EVC PREMT Ø6 & Ø1** TB9 5,2,6 J-Yellow E-Orange K-Blu+Shl	**EVD PREMT Ø8 & Ø3** TB9 8,3,9 J-Yellow E-Orange K-Blu+Shl	**RR2 PREMT ϕ4 & ϕ7** TB9 11,12 W-C1/52 J K

OUTPUT FILE

Ø1	**Ø2**	**Ø2P**	**Ø3**	**Ø4**	**Ø4P**
R-125 C1/16	R-128 C1/12	R-113 C1/10	R-116 C1/7	R-101 C1/4	R-104 C1/2
Y-126 C1/17	Y-129 C1/13	Y-114 C1/35	Y-117 C1/8	Y-102 C1/5	Y-105 C1/37
G-127 C1/18	G-130 C1/15	G-115 C1/11	G-118 C1/9	G-103 C1/6	G-106 C1/3
Ø5	**Ø6**	**Ø6P**	**Ø7**	**Ø8**	**Ø8P**
R-131 C1/32	R-134 C1/29	R-119 C1/27	R-122 C1/24	R-107 C1/21	R-110 C1/19
Y-132 C1/33	Y-135 C1/30	Y-120 C1/36	Y-123 C1/25	Y-108 C1/22	Y-111 C1/38
G-133 C1/34	G-136 C1/31	G-121 C1/28	G-124 C1/26	G-109 C1/23	G-112 C1/20

AUXILIARY

A1(OL'C)	**A2(OL'D)**	**A3**	**A4(OL'A)**	**A5(OL'B)**	**A6**
R-A121 C1/97	R-A124 C1/94	R-A111 C1/91	R-A114 C1/88	R-A101 C1/85	R-A104 C1/84
Y-A122 C1/98	Y-A125 C1/95	Y-A112 C1/101	Y-A115 C1/89	Y-A102 C1/86	Y-A105 C1/100
G-A123 C1/99	G-A126 C1/96	G-A113 C1/93	G-A116 C1/90	G-A103 C1/87	G-A106 C1/83

ALA	**580**	**32.844**	**San Leandro**	**150th/Freedom & Rte 580 E/B Off-ramp**
County	Route	PM	City	Location

DIODE CARD

08/24/15

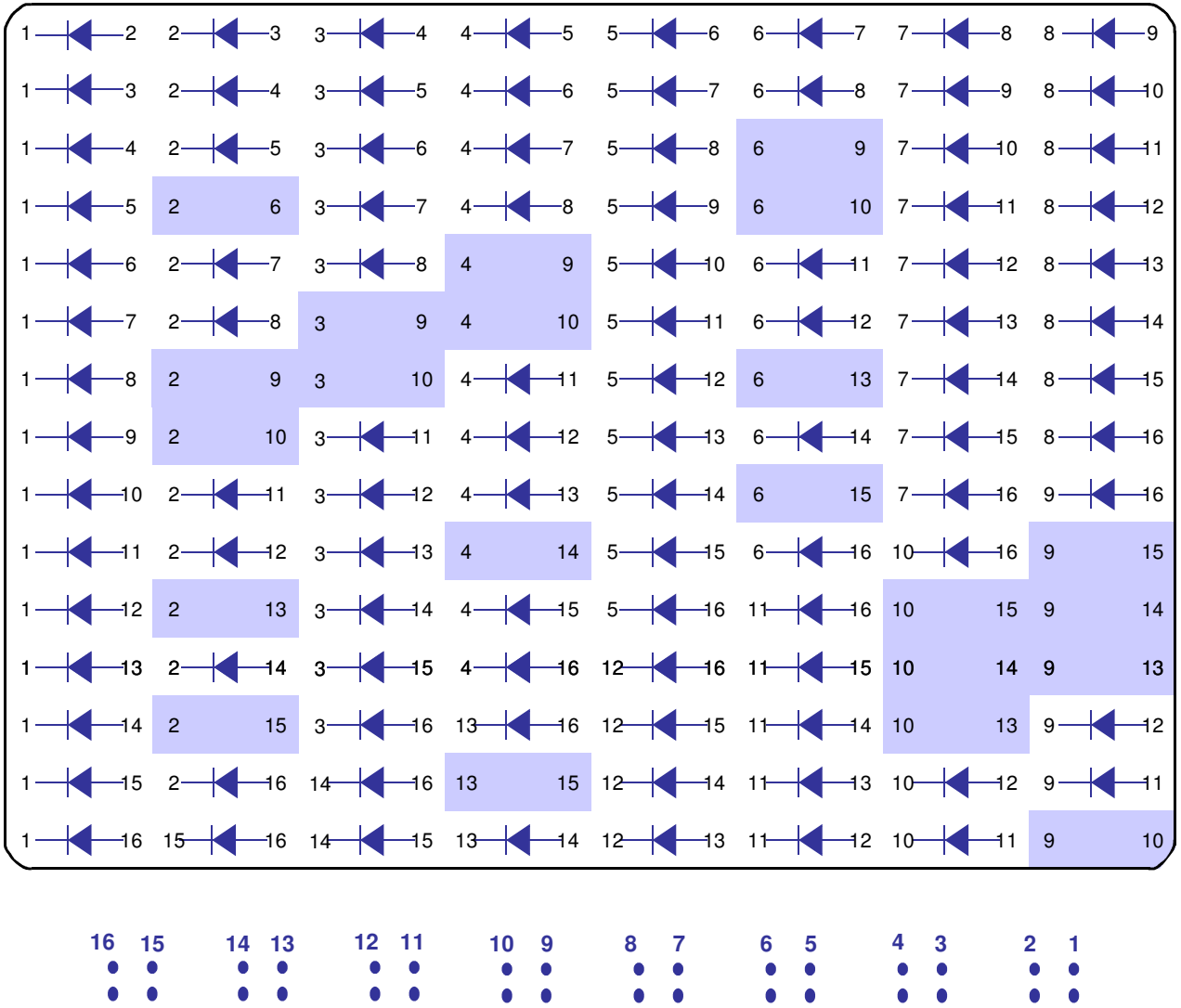

CHANNEL	PIN	LOAD SWITCH ASSIGNMENT		PIN
1	9	Ø1 Y	Ø1 G	J
2	1	Ø2 G	Ø2 Y	A
3	12	Ø3 Y	Ø3 G	M
4	4	Ø4 G	Ø4 Y	D
5	7	Ø5 G	Ø5 Y	H
6	3	Ø6 Y	Ø6 G	B
7	10	Ø7 G	Ø7 Y	L
8	6	Ø8 Y	Ø8 G	E
9G	13	Ø2P Y		
9Y	16	Ø4P Y		
10G			Ø6P Y	R
10Y			Ø8P Y	U
11G			N/U	S
11Y	15	N/U		
12G			N/U	V
12Y	18	N/U		
13G	2	Ø2P G		
13Y	8	N/U		
14G	5	Ø4P G		
14Y	11	N/U		
15G			Ø6P G	C
15Y			N/U	K
16G			Ø8P G	F
16Y			N/U	N

ALA	580	32.844	San Leandro	150th/Freedom & Rte 580 E/B Off-ramp
County	Route	PM	City	Location

INTERVAL	TIMING FUNCTION	Ø1	Ø2	Ø3	Ø4	Ø5	Ø6	Ø7	Ø8
0	WALK		7		7		7		7
1	FLASHING DON'T WALK		20		20		15		20
2	MINIMUM INITIAL	4	10	2	8	4	10	2	9
3	TYPE 3 DET. DISCONNECT		16				16		
4	ADDED SEC./ACTUATION	0	2		0	0	2		0
5	PASSAGE	2	4	2	2	2	4	2	2
6	MAXIMUM GAP	3	5	2	3	3	5	2	3
7	MINIMUM GAP	1	3	2	1.2	1	3	2	1.2
8	MAXIMUM EXTENSION I	16	30	2	26	21	30	2	26
9	MAXIMUM EXTENSION II								
A	MAXIMUM EXTENSION III	16	30	2	26	21	30	2	26
B									
C	SEC. OF GAP REDUCED	0.1	0.1	0.1	0.1	0.1	0.1	0.1	0.1
D	PER SEC. OF INTERVAL	0.8	2.0	0.8	1.0	1.0	2.0	0.8	1.0
E	YELLOW	3	4	3	3.6	3	4	3	3
F	RED CLEARANCE	0	0	0	1	0	0	0	1

TURN ON	TIMING CHANGE BY:	REMARKS	FILE
1130 EPB	OY	ALL RED FLASH	MAINT.

DATE	DATE	Print Date	By	FILENAME	E#	OPERATION
Aug 17, '88	04/29/30	Aug 24,'15	OY	ALA-185-03.690.xls	E33K7	5Φ SLAVE

COUNTY	ROUTE	PM	CITY	INTERSECTION	PROGRAM
ALA	**185**	**03.690**	**San Leanro**	**150th AVENUE & E. 14th ST.**	**C8.4** #7

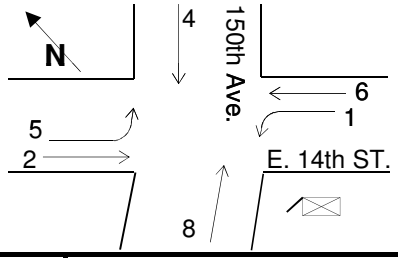

NOTE: To Initialize Controller: 1)Set Location & Feature Switches; 2) Clear RAM Location C-C-0 with STOP-TIME ON; 3) Enter Non-zero at C-C-1 to enter timing; 4)Enter 0 at C-C-1 to star

******SET REAL TIME CLOCK TO TELEPHONE TIME******

9600 MODEM Req'd, **MASTER LOCATED at Fairmont & E 14th.**

Set Jumper ACIA 1 53.6Khz

OY 4/30/13 Coordination is along E-14, No more Coordination along Hesperian Blvd

INTERVAL	FLAG FUNCTION	DISPLAY	Ø1	Ø2	Ø3	Ø4	Ø5	Ø6	Ø7	Ø8
0	PERMITTED PHASES	F 171	ON	ON		ON		ON		ON
1	RED DETECTOR LOCK									
2	YELLOW DET. LOCK									
3	VEHICLE RECALL	F 034		ON				ON		
4	PEDESTRIAN RECALL									
5	PEDESTRIAN PHASES	F 170		ON		ON		ON		ON
6	OVERLAP A									
7	OVERLAP B									
8	DOUBLE ENTRY	F 170		ON		ON		ON		ON
9	MAX EXT. II									
A	LAG PHASES	VIEW	***FOR OBSERVATION ONLY (SET LAG PHASES AT C-F-0 TO C-F-9)***							
B	RED REST									
C	NON ACTUATED									
D	MAXIMUM EXT. III									
E	START UP YELLOW									
F	FIRST PHASE GREEN	F 034		ON				ON		

EPROM BOARD - 412C

08/24/15

CHIP	PROGRAM	NUMBER	CHECKSUM	CHIP	PROGRAM	NUMBER	CHECKSUM
U1	C8.4	E# 152	27BI	U2	C8.4		

	1	2	3	4	5	6	7	8		1	2	3	4	5	6	7	8
LOCATION (1=ON)									FEATURE (1=ON)								
SWITCH (0=OFF)	1	1	1	0	0	0	0	0	SWITCH (0=OFF)	0	0	0	0	0	0	0	0

CODE	FUNCTION	ENTER	DISPLAY LAMPS	DISPLAY TIMING
F-0-E	MAXIMUM VARIABLE INITIAL	20 E		F 020
F-0-F	RED REVERT	20 E		F 02.0
F-D-0	TBCSEL	1 E		F 001
F-D-1	HOUR	0 E		F 000
F-D-2	MINUTE	0 E		F 000
F-D-8	OFFSET SEEKING FLAG	1 E		F 001
C-0-0	LOCAL ADDRESS	OBSERVE	ONLY	C 007
C-C-2	PC MASTER DOWNLOAD	1 E		C 001
C-F-C	COORDINATED FAZES	2 6	2 6	C 034
D-0-9	FEATURE (Set by Feature Switch)	OBSERVE	ONLY	d 000
F-D-3	Coord Ped Rest in WALK	2 6 E		F 026
F-D-4	ACTIVE 7W-OUTPUT	7 E		F007
C-C-3	Follow Local 9-Key	0 E		C000
F-C-F	RAM ACCESS	113 E		F113
E-3-9	TSP ON	2 E		E002
F-C-F	RAM EXIT	0 E		F000
C-F-0	LAG FAZES "FREE"	2 4 6 8	2 4 6 8	C 170
C-F-1	LAG FAZES "PATTERN 1"	2 4 5 8	2 4 5 8	C 154
C-F-2	LAG FAZES "PATTERN 2"	2 4 5 8	2 4 5 8	C 154
C-F-3	LAG FAZES "PATTERN 3"	2 4 5 8	2 4 5 8	C 154
C-F-4	LAG FAZES "PATTERN 4"			C
C-F-5	LAG FAZES "PATTERN 5"			C
C-F-6	LAG FAZES "PATTERN 6"			C
C-F-7	LAG FAZES "PATTERN 7"			C
C-F-8	LAG FAZES "PATTERN 8"			C
C-F-9	LAG FAZES "PATTERN 9"			C

CODE	FUNCTION	ENTER	DISPLAY LAMPS	DISPLAY TIMING
F-E-3	EVA HOLD TIME	5 E		F005
F-E-5	EVB HOLD TIME	5 E		F005
F-E-7	EVC HOLD TIME	5 E		F005
F-E-9	EVD HOLD TIME	5 E		F005
F-E-A	EV MAX HOLD TIME	30 E		F030
C-C-3	LOCAL FOLLOWS THE MASTER	1 E		
F-C-F	RAM PAGE ACCESS	113 E		
E39	TSP ON	002 E		
F-C-F	RAM PAGE EXIT	0 E		
C-E-1	LAG PHASE Gap-Out "PATTERN 1"	5 E		C 005
C-E-2	LAG PHASE Gap-Out "PATTERN 2"	5 E		C 005
C-E-3	LAG PHASE Gap-Out "PATTERN 3"	5 E		C 005
C-E-4	LAG PHASE Gap-Out "PATTERN 4"	E		C
C-E-5	LAG PHASE Gap-Out "PATTERN 5"	E		C
C-E-6	LAG PHASE Gap-Out "PATTERN 6"	E		C
C-E-7	LAG PHASE Gap-Out "PATTERN 7"	E		C
C-E-8	LAG PHASE Gap-Out "PATTERN 8"	E		C
C-E-9	LAG PHASE Gap-Out "PATTERN 9"	E		C

ALA	185	03.690	San Leanro	150th AVENUE & E. 14th ST.
County	Route	PM	City	Location

PLAN 1

CODE	FUNCTION	ENTER	DISPLAY
C-1-0	CYC. LENG.	85 E	C 085
C-1-1	ϕ 1 SPLIT	12 E	C 012
C-1-2	ϕ 2 SPLIT	E	C
C-1-3	ϕ 3 SPLIT	E	C
C-1-4	ϕ 4 SPLIT	27 E	C 027
C-1-5	ϕ 5 SPLIT	12 E	C 012
C-1-6	ϕ 6 SPLIT	E	C
C-1-7	ϕ 7 SPLIT	E	C
C-1-8	ϕ 8 SPLIT	27 E	C 027
C-1-A	OFFSET A	1 E	C 001
C-1-B	OFFSET B	E	C
C-1-C	OFFSET C	E	C

PLAN 2

CODE	FUNCTION	ENTER	DISPLAY
C-2-0	CYC. LENG.	95 E	C 095
C-2-1	ϕ 1 SPLIT	17 E	C 017
C-2-2	ϕ 2 SPLIT	E	C
C-2-3	ϕ 3 SPLIT	E	C
C-2-4	ϕ 4 SPLIT	22 E	C 022
C-2-5	ϕ 5 SPLIT	17 E	C 017
C-2-6	ϕ 6 SPLIT	E	C
C-2-7	ϕ 7 SPLIT	E	C
C-2-8	ϕ 8 SPLIT	22 E	C 022
C-2-A	OFFSET A	27 E	C 027
C-2-B	OFFSET B	E	C
C-2-C	OFFSET C	E	C

PLAN 3

CODE	FUNCTION	ENTER	DISPLAY
C-3-0	CYC. LENG.	95 E	C 095
C-3-1	ϕ 1 SPLIT	17 E	C 017
C-3-2	ϕ 2 SPLIT	E	C
C-3-3	ϕ 3 SPLIT	E	C
C-3-4	ϕ 4 SPLIT	27 E	C 027
C-3-5	ϕ 5 SPLIT	17 E	C 017
C-3-6	ϕ 6 SPLIT	E	C
C-3-7	ϕ 7 SPLIT	E	C
C-3-8	ϕ 8 SPLIT	27 E	C 027
C-3-A	OFFSET A	34 E	C 034
C-3-B	OFFSET B	E	C
C-3-C	OFFSET C	E	C

PLAN 4

CODE	FUNCTION	ENTER	DISPLAY
C-4-0	CYC. LENG.	E	C
C-4-1	ϕ 1 SPLIT	E	C
C-4-2	ϕ 2 SPLIT	E	C
C-4-3	ϕ 3 SPLIT	E	C
C-4-4	ϕ 4 SPLIT	E	C
C-4-5	ϕ 5 SPLIT	E	C
C-4-6	ϕ 6 SPLIT	E	C
C-4-7	ϕ 7 SPLIT	E	C
C-4-8	ϕ 8 SPLIT	E	C
C-4-A	OFFSET A	E	C 000
C-4-B	OFFSET B	E	C
C-4-C	OFFSET C	E	C

PLAN 5

CODE	FUNCTION	ENTER	DISPLAY
C-5-0	CYC. LENG.	E	C
C-5-1	ϕ 1 SPLIT	E	C
C-5-2	ϕ 2 SPLIT	E	C
C-5-3	ϕ 3 SPLIT	E	C
C-5-4	ϕ 4 SPLIT	E	C
C-5-5	ϕ 5 SPLIT	E	C
C-5-6	ϕ 6 SPLIT	E	C
C-5-7	ϕ 7 SPLIT	E	C
C-5-8	ϕ 8 SPLIT	E	C
C-5-A	OFFSET A	E	C 000
C-5-B	OFFSET B	E	C
C-5-C	OFFSET C	E	C

PLAN 6

CODE	FUNCTION	ENTER	DISPLAY
C-6-0	CYC. LENG.	E	C
C-6-1	ϕ 1 SPLIT	E	C
C-6-2	ϕ 2 SPLIT	E	C
C-6-3	ϕ 3 SPLIT	E	C
C-6-4	ϕ 4 SPLIT	E	C
C-6-5	ϕ 5 SPLIT	E	C
C-6-6	ϕ 6 SPLIT	E	C
C-6-7	ϕ 7 SPLIT	E	C
C-6-8	ϕ 8 SPLIT	E	C
C-6-A	OFFSET A	E	C 000
C-6-B	OFFSET B	E	C
C-6-C	OFFSET C	E	C

PLAN 7

CODE	FUNCTION	ENTER	DISPLAY
C-7-0	CYC. LENG.	E	C
C-7-1	ϕ 1 SPLIT	E	C
C-7-2	ϕ 2 SPLIT	E	C
C-7-3	ϕ 3 SPLIT	E	C
C-7-4	ϕ 4 SPLIT	E	C
C-7-5	ϕ 5 SPLIT	E	C
C-7-6	ϕ 6 SPLIT	E	C
C-7-7	ϕ 7 SPLIT	E	C
C-7-8	ϕ 8 SPLIT	E	C
C-7-A	OFFSET A	E	C 000
C-7-B	OFFSET B	E	C
C-7-C	OFFSET C	E	C

PLAN 8

CODE	FUNCTION	ENTER	DISPLAY
C-8-0	CYC. LENG.	E	C
C-8-1	ϕ 1 SPLIT	E	C
C-8-2	ϕ 2 SPLIT	E	C
C-8-3	ϕ 3 SPLIT	E	C
C-8-4	ϕ 4 SPLIT	E	C
C-8-5	ϕ 5 SPLIT	E	C
C-8-6	ϕ 6 SPLIT	E	C
C-8-7	ϕ 7 SPLIT	E	C
C-8-8	ϕ 8 SPLIT	E	C
C-8-A	OFFSET A	E	C 000
C-8-B	OFFSET B	E	C
C-8-C	OFFSET C	E	C

PLAN 9

CODE	FUNCTION	ENTER	DISPLAY
C-9-0	CYC. LENG.	E	C
C-9-1	ϕ 1 SPLIT	E	C
C-9-2	ϕ 2 SPLIT	E	C
C-9-3	ϕ 3 SPLIT	E	C
C-9-4	ϕ 4 SPLIT	E	C
C-9-5	ϕ 5 SPLIT	E	C
C-9-6	ϕ 6 SPLIT	E	C
C-9-7	ϕ 7 SPLIT	E	C
C-9-8	ϕ 8 SPLIT	E	C
C-9-A	OFFSET A	E	C 000
C-9-B	OFFSET B	E	C
C-9-C	OFFSET C	E	C

COORD MAX RECALL

CODE	PLAN	ENTER	CALL LAMPS	TIMING DATA
D-D-1	1			d
D-D-2	2			d
D-D-3	3			d
D-D-4	4			d
D-D-5	5			d
D-D-6	6			d
D-D-7	7			d
D-D-8	8			d
D-D-9	9			d

COORD MIN RECALL

CODE	PLAN	ENTER	CALL LAMPS	TIMING DATA
D-E-1	1			d
D-E-2	2			d
D-E-3	3			d
D-E-4	4			d
D-E-5	5			d
D-E-6	6			d
D-E-7	7			d
D-E-8	8			d
D-E-9	9			d

COORD PED RECALL

CODE	PLAN	ENTER	CALL LAMPS	TIMING DATA
D-F-1	1			d
D-F-2	2			d
D-F-3	3			d
D-F-4	4			d
D-F-5	5			d
D-F-6	6			d
D-F-7	7			d
D-F-8	8			d
D-F-9	9			d

08/24/15

ALA	185	03.690	San Leanro	150th AVENUE & E. 14th ST.
County	Route	PM	City	Location

CONTROL CODE "7"

TIME OF DAY ACTIVITY TABLE

KEY STROKES 7 + EVENT # + HOUR + MIN + ACT CODE + "E" + ON/OFF + DOW LTS

EVENT #	TIME	ACTIVITY CODE	DEPRESS "E"	ON/OFF	DAY OF THE WEEK SET DISPLAY LIGHTS 1-7						
				LIGHT	SUN	MON	TUE	WED	THUR	FRI	SAT
				0	1	2	3	4	5	6	7
0			E								
1			E								
2			E								
3			E								
4			E								
5			E								
6			E								
7			E								
8			E								
9			E								
A			E								
B			E								
C			E								
D			E								
E			E								
F			E								

CONTROL CODE "9"

TIME OF DAY SELECTION FOR COORDINATED CONTROL PLANS

KEY STROKES 9 + EVENT # + HOUR + MIN + Control Plan + Offset + "E" + DOW LTS

DATE	BY	EVENT #	TIME	CONTROL PLAN	OFFSET	DEPRESS "E"	DAY OF THE WEEK SET DISPLAY LIGHTS 1-7						
							SUN	MON	TUE	WED	THUR	FRI	SAT
							1	2	3	4	5	6	7
		0	**0630**	**1**	**A**	E		X	X	X	X	X	
		1	**0900**	**3**	**A**	E	X	X	X	X	X	X	X
		2				E							
		3	**1900**	**E**		E	X	X	X	X	X	X	X
		4				E							
		5				E							
		6				E							
		7				E							
		8				E							
		9				E							
		A				E							
		B				E							
		C				E							
		D				E							
		E				E							
		F				E							

08/24/15

"7" KEY ACTIVITY CODE

1=TYPE OF SIMULTANEOUS PHASE TERMINATION
2=MAX 2 FAZES
3=MAX 3 FAZES
4=CONDITIONAL SERVICE (1ST SELECT) FAZES SET AT E-F-0
5=CONDITIONAL SERVICE (2ND SELECT) FAZES SET AT E-F-1
6=ENERGIZE AUX 6 RED
7=ENERGIZE AUX 6 GREEN
8=ENERGIZE AUX 6 YELLOW
9=CONSTANT CALL ON FAZES SET AT D-F-A
A=TRAFFIC ACTUATED MAX 2 OPERATION
B=CONSTANT CALL ON FAZES SET AT D-F-B
C=YELLOW YIELD COORDINATION
D=YELLOW YIELD COORDINATION
E=COORD FREE IF F-D-4 = 0
F=FLASHING OPERATION

County	Route	PM	City	Location
ALA	**185**	**03.690**	**San Leanro**	**150th AVENUE & E. 14th ST.**

INPUT FILE - 332 CABINET

8/24/2015

1	2	3	4	5	6	7	8	9	10	11	12	13	14
1I1U EX,CT 1I10U TB2 1,2 F-C1/56 D E	**2I2U** EX,CT 2I11U TB2 5,6 F-C1/39 D E	**2I3U** EX,CT 2I13U TB2 9,10 F-C1/63 D E	**2I4U** CL,T3 2I15U TB4 1,2 F-C1/47 D E	**3I5U** EX,CT 3I16U TB4 5,6 F-C1/58 D E	**4I6U** EX,CT 4I17U TB4 9,10 F-C1/41 D E	**4I7U** EX,CT 4I19U TB6 1,2 F-C1/65 D E	**4I8U** CL,T3 4I1BU TB6 5,6 F-C1/49 D E	**1I9U** EX,CT 1I1CU TB6 9,10 F-C1/60 D E	F D E	**MANUAL** TB8 1,3 F-C1/80 D E	**2-PPB** 2I1E TB8 4,6 F-C1-67 D E	**6-PPB** 6I2E TB8 7,9 F-C1/68 D E	**FLASH SENSE** TB8 10,12 F-C1/81 D E
1I1L EX,CT 1I10L TB2 3,4 W-C1/56 J K	**2I2L** EX,CT 2I12L TB2 7,8 W-C1/43 J K	**2I3L** EX 2I14L TB2 11,12 W-C1/76 J K	**2I4L** CL,T3 2I15L TB4 3,4 W-C1/47 J K	**3I5L** EX,CT 3I16L TB4 7,8 W-C1/58 J K	**4I6L** EX,CT 4I18L TB4 11,12 W-C1/45 J K	**4I7L** EX 4I1AL TB6 3,4 W-C1/78 J K	**4I8L** CL,T3 4I1BL TB6 7,8 W-C1/49 J K	**3I9L** EX,CT 3I1DL TB6 11,12 W-C1/62 J K	W J K	**SPARE 1** TB8 2,3 W-C1/53 J K	**4-PPB** 4I1F TB8 5,6 W-C1/69 J K	**8-PPB** 8I2F TB8 8,9 W-C1/70 J K	**STOP TIME** TB8 11,12 W-C1/82 J K
5J1U EX,CT 5J20U TB3 1,2 F-C1/55 D E	**6J2U** EX,CT 6J21U TB3 5,6 F-C1/40 D E	**6J3U** EX,CT 6J23U TB3 9,10 F-C1/64 D E	**6J4U** CL,T3 6J25U TB5 1,2 F-C1/48 D E	**7J5U** EX,CT 7J26U TB5 5,6 F-C1/57 D E	**8J6U** EX,CT 8J27U TB5 9,10 F-C1/42 D E	**8J7U** EX,CT 8J29U TB7 1,2 F-C1/66 D E	**8J8U** CL,T3 8J2BU TB7 5,6 F-C1/50 D E	**5J9U** EX,CT 5J2CU TB7 9,10 F-C1/59 D E	F D E	**SPARE 2** TB9 1,3 F-C1/54 D E	**EVA PREMT** **Ø2 & Ø5** TB9 4,2,6 D-Yellow E-Orange K-Blu+Shl	**EVB PREMT** **Ø4 & Ø7** TB9 7,3,9 D-Yellow E-Orange K-Blu+Shl	**RR1 PREMT** **ϕ2 & ϕ5** TB9 10,12 F-C1/51 D E
5J1L EX,CT 5J20L TB3 3,4 W-C1/55 J K	**6J2L** EX,CT 6J22L TB3 7,8 W-C1/44 J K	**6J3L** EX 6J24L TB3 11,12 W-C1/77 J K	**6J4L** CL,T3 6J25L TB5 3,4 W-C1/48 J K	**7J5L** EX,CT 7J26L TB5 7,8 W-C1/57 J K	**8J6L** EX,CT 8J28L TB5 11,12 W-C1/46 J K	**8J7L** EX 8J2AL TB7 3,4 W-C1/79 J K	**8J8L** CL,T3 8J2BL TB7 7,8 W-C1/50 J K	**7J9L** EX,CT 7J2DL TB7 11,12 W-C1/61 J K	W J K	**SPARE 3** TB9 2,3 W-C1/75 J K	**EVC PREMT** **Ø6 & Ø1** TB9 5,2,6 J-Yellow E-Orange K-Blu+Shl	**EVD PREMT** **Ø8 & Ø3** TB9 8,3,9 J-Yellow E-Orange K-Blu+Shl	**RR2 PREMT** **ϕ4 & ϕ7** TB9 11,12 W-C1/52 J K

OUTPUT FILE

Ø1	**Ø2**	**Ø2P**	**Ø3**	**Ø4**	**Ø4P**
R-125 C1/16	R-128 C1/12	R-113 C1/10	R-116 C1/7	R-101 C1/4	R-104 C1/2
Y-126 C1/17	Y-129 C1/13	Y-114 C1/35	Y-117 C1/8	Y-102 C1/5	Y-105 C1/37
G-127 C1/18	G-130 C1/15	G-115 C1/11	G-118 C1/9	G-103 C1/6	G-106 C1/3
Ø5	**Ø6**	**Ø6P**	**Ø7**	**Ø8**	**Ø8P**
R-131 C1/32	R-134 C1/29	R-119 C1/27	R-122 C1/24	R-107 C1/21	R-110 C1/19
Y-132 C1/33	Y-135 C1/30	Y-120 C1/36	Y-123 C1/25	Y-108 C1/22	Y-111 C1/38
G-133 C1/34	G-136 C1/31	G-121 C1/28	G-124 C1/26	G-109 C1/23	G-112 C1/20

AUXILIARY

A1(OL'C)	**A2(OL'D)**	**A3**	**A4(OL'A)**	**A5(OL'B)**	**A6**
R-A121 C1/97	R-A124 C1/94	R-A111 C1/91	R-A114 C1/88	R-A101 C1/85	R-A104 C1/84
Y-A122 C1/98	Y-A125 C1/95	Y-A112 C1/101	Y-A115 C1/89	Y-A102 C1/86	Y-A105 C1/100
G-A123 C1/99	G-A126 C1/96	G-A113 C1/93	G-A116 C1/90	G-A103 C1/87	G-A106 C1/83

R-A111 C1/91
Y-A112 C1/101
G-A113 C1/93

To City Intersect

ALA	**185**	**03.690**	**San Leanro**	**150th AVENUE & E. 14th ST.**
County	Route	PM	City	Location

DIODE CARD

08/24/15

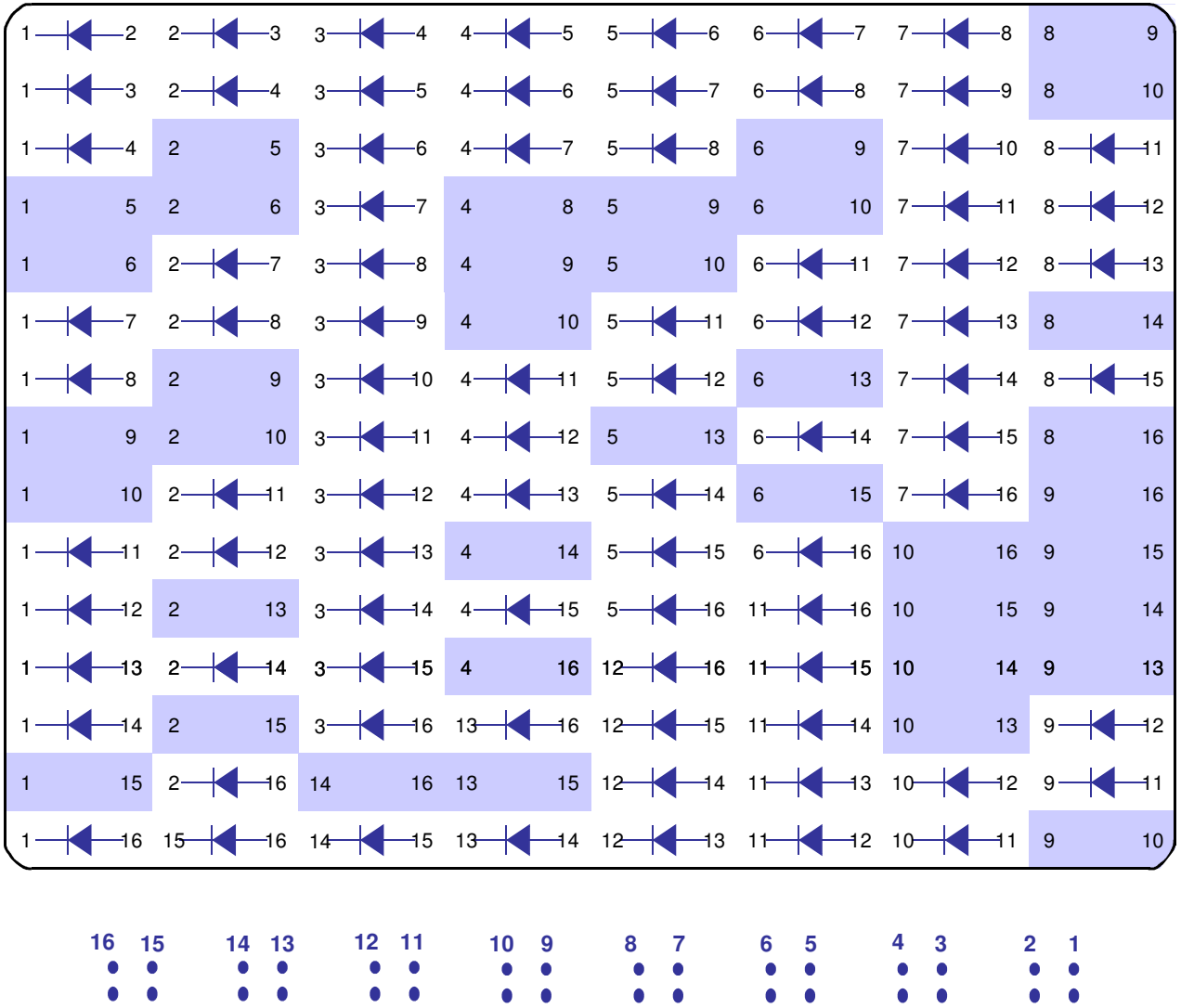

CHANNEL	PIN	LOAD SWITCH ASSIGNMENT		PIN
1	9	Ø1 Y	Ø1 G	J
2	1	Ø2 G	Ø2 Y	A
3	12	Ø3 Y	Ø3 G	M
4	4	Ø4 G	Ø4 Y	D
5	7	Ø5 G	Ø5 Y	H
6	3	Ø6 Y	Ø6 G	B
7	10	Ø7 G	Ø7 Y	L
8	6	Ø8 Y	Ø8 G	E
9G	13	Ø2P G		
9Y	16	Ø4P Y		
10G			Ø6P Y	R
10Y			Ø8P Y	U
11G			N/U	S
11Y	15	N/U		
12G			N/U	V
12Y	18	N/U		
13G	2	Ø2P G		
13Y	8	N/U		
14G	5	Ø4P G		
14Y	11	N/U		
15G			Ø6P G	C
15Y			N/U	K
16G			Ø8P G	F
16Y			N/U	N

ALA	185	03.690	San Leanro	150th AVENUE & E. 14th ST.
County	Route	PM	City	Location

INTERVAL	TIMING FUNCTION	Ø1	Ø2	Ø3	Ø4	Ø5	Ø6	Ø7	Ø8
0	WALK		5		5		5		5
1	FLASHING DON'T WALK		25		20		26		18
2	MINIMUM INITIAL	4	10	4	4	4	10	4	4
3	TYPE 3 DET. DISCONNECT		16		16		16		16
4	ADDED SEC./ACTUATION	0	2	0	0	0	2	0	0
5	PASSAGE	2	4	2	2	2	4	2	2
6	MAXIMUM GAP	3	5	3	3	3	5	3	3
7	MINIMUM GAP	1	3	1	1	1	3	1	1
8	MAXIMUM EXTENSION I	21	30	16	21	16	30	16	21
9	MAXIMUM EXTENSION II								
A	MAXIMUM EXTENSION III	21	30	16	21	16	30	16	21
B									
C	SEC. OF GAP REDUCED	0.1	0.1	0.1	0.1	0.1	0.1	0.1	0.1
D	PER SEC. OF INTERVAL	1.0	2.0	0.8	1.0	0.8	2.0	0.8	1.0
E	YELLOW	3.7	4.1	3.7	4.1	3.7	4.1	3.7	4.1
F	RED CLEARANCE	0	0.5	0	0.5	0	0.5	0	0.5

TURN ON	TIMING CHANGE BY:	REMARKS	FILE
DC/TJW	OY	ALL RED FLASH	MAINT.

DATE	DATE	Print Date	By	FILENAME	E#	OPERATION
Sep 27, '89	12/03/13	Aug 24,'15	OY	ALA-185-03.440.xls		8 ϕ

COUNTY	ROUTE	PM	CITY	INTERSECTION	PROGRAM
ALA	**185**	**03.440**	**San Leandro**	**FAIRMONT DR. & E. 14th St.**	**C8V4** Slave

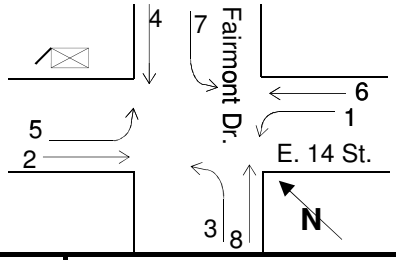

NOTE: To Initialize Controller: 1)Set Location & Feature Switches; 2) Clear RAM Location C-C-0 with STOP-TIME ON; 3) Enter Non-zero at C-C-1 to enter timing; 4)Enter 0 at C-C-1 to star

******SET REAL TIME CLOCK TO TELEPHONE TIME******

Master in BBS CABINET @ Fairmont [redacted]

496 MODEM REQUIRED. SET ACIA JUMPERs TO 153 KHZ C40S - SIF 752 CARD

OY: Ped time adjusted 12/3/13

OY:08/19/15 Updated Yellow. (Yellow time compliance)

INTERVAL	FLAG FUNCTION	DISPLAY	Ø1	Ø2	Ø3	Ø4	Ø5	Ø6	Ø7	Ø8
0	PERMITTED PHASES	F 255	ON	ON	ON	ON	ON	ON	ON	ON
1	RED DETECTOR LOCK									
2	YELLOW DET. LOCK									
3	VEHICLE RECALL	F 034		ON				ON		
4	PEDESTRIAN RECALL									
5	PEDESTRIAN PHASES	F 170		ON		ON		ON		ON
6	OVERLAP A									
7	OVERLAP B									
8	DOUBLE ENTRY	F 170		ON		ON		ON		ON
9	MAX EXT. II									
A	LAG PHASES	VIEW	*FOR OBSERVATION ONLY (SET LAG PHASES AT C-F-0 TO C-F-9)*							
B	RED REST									
C	NON ACTUATED									
D	MAXIMUM EXT. III									
E	START UP YELLOW									
F	FIRST PHASE GREEN									

EPROM BOARD - 412C

08/24/15

CHIP	PROGRAM	NUMBER	CHECKSUM	CHIP	PROGRAM	NUMBER	CHECKSUM
U1	C8V4	E# 152	27B1	U2	C8V4		

	1	2	3	4	5	6	7	8
LOCATION (1=ON)								
SWITCH (0=OFF)	1	0	0	0	0	0	0	0
FEATURE (1=ON)								
SWITCH (0=OFF)	0	0	0	0	0	0	0	0

CODE	FUNCTION	ENTER	DISPLAY LAMPS	DISPLAY TIMING
F-0-E	MAXIMUM VARIABLE INITIAL	20 E		F 020
F-0-F	RED REVERT	20 E		F 02.0
F-D-0	TBCSEL	1 E		F 001
F-D-1	HOUR	0 E		F 000
F-D-2	MINUTE	0 E		F 000
F-D-8	OFFSET SEEKING FLAG	1 E		F 001
C-0-0	LOCAL ADDRESS	OBSERVE	ONLY	C 001
C-C-2	PC MASTER DOWNLOAD	1 E		C 001
C-F-C	COORDINATED FAZES	2 6	2 6	C 034
D-0-9	FEATURE (Set by Feature Switch)	OBSERVE	ONLY	d 000
D-1-B	DELAY DEYECTOR 4I8U	200 E		d20.0
D-2-B	DELAY DETECTOR 8J8U	200 E		d20.0
D-0-1	System Detector 2I2U	1 E		d001
D-0-2	System Detector 2I2L	5 E		d005
D-0-3	System Detector 6J2U	2 E		d002
D-0-4	Sytem Detector 6J2L	6 E		d006
C-F-0	LAG FAZES "FREE"	2 4 6 8	2 4 6 8	C 170
C-F-1	LAG FAZES "PATTERN 1"	1 4 6 8	1 4 6 8	C 169
C-F-2	LAG FAZES "PATTERN 2"	1 4 6 8	1 4 6 8	C 169
C-F-3	LAG FAZES "PATTERN 3"	1 4 6 8	1 4 6 8	C 169
C-F-4	LAG FAZES "PATTERN 4"			C
C-F-5	LAG FAZES "PATTERN 5"			C
C-F-6	LAG FAZES "PATTERN 6"			C
C-F-7	LAG FAZES "PATTERN 7"			C
C-F-8	LAG FAZES "PATTERN 8"			C
C-F-9	LAG FAZES "PATTERN 9"			C

CODE	FUNCTION	ENTER	DISPLAY LAMPS	DISPLAY TIMING
F-E-3	EVA MIN HOLD TIME	5 E		f005
F-E-7	EVC MIN HOLD TIME	5 E		f005
F-E-A	MAX HOLD TIME	30 E		f030
F-C-F	RAM ACCESS	113 E		F113
E-3-9	TSP ON	2 E		E002
F-C-F	RAM EXIT	0 E		F000
C-C-3	FLOW THE MASTER	1 E		
C-E-1	LAG PHASE Gap-Out "PATTERN 1"	1 E		C 001
C-E-2	LAG PHASE Gap-Out "PATTERN 2"	1 E		C 001
C-E-3	LAG PHASE Gap-Out "PATTERN 3"	1 E		C 001
C-E-4	LAG PHASE Gap-Out "PATTERN 4"	E		C
C-E-5	LAG PHASE Gap-Out "PATTERN 5"	E		C
C-E-6	LAG PHASE Gap-Out "PATTERN 6"	E		C
C-E-7	LAG PHASE Gap-Out "PATTERN 7"	E		C
C-E-8	LAG PHASE Gap-Out "PATTERN 8"	E		C
C-E-9	LAG PHASE Gap-Out "PATTERN 9"	E		C

ALA	185	03.440	San Leandro	FAIRMONT DR. & E. 14th St.
County	Route	PM	City	Location

PLAN 1

CODE	FUNCTION	ENTER	DISPLAY
C-1-0	CYC. LENG.	85 E	C 085
C-1-1	ϕ 1 SPLIT	11 E	C 011
C-1-2	ϕ 2 SPLIT	E	C
C-1-3	ϕ 3 SPLIT	11 E	C 011
C-1-4	ϕ 4 SPLIT	24 E	C 024
C-1-5	ϕ 5 SPLIT	11 E	C 011
C-1-6	ϕ 6 SPLIT	E	C
C-1-7	ϕ 7 SPLIT	11 E	C 011
C-1-8	ϕ 8 SPLIT	24 E	C 024
C-1-A	OFFSET A	42 E	C 042
C-1-B	OFFSET B	E	C
C-1-C	OFFSET C	E	C

PLAN 2

CODE	FUNCTION	ENTER	DISPLAY
C-2-0	CYC. LENG.	E	C
C-2-1	ϕ 1 SPLIT	E	C
C-2-2	ϕ 2 SPLIT	E	C
C-2-3	ϕ 3 SPLIT	E	C
C-2-4	ϕ 4 SPLIT	E	C
C-2-5	ϕ 5 SPLIT	E	C
C-2-6	ϕ 6 SPLIT	E	C
C-2-7	ϕ 7 SPLIT	E	C
C-2-8	ϕ 8 SPLIT	E	C
C-2-A	OFFSET A	E	C 000
C-2-B	OFFSET B	E	C
C-2-C	OFFSET C	E	C

PLAN 3

CODE	FUNCTION	ENTER	DISPLAY
C-3-0	CYC. LENG.	95 E	C 095
C-3-1	ϕ 1 SPLIT	12 E	C 012
C-3-2	ϕ 2 SPLIT	E	C
C-3-3	ϕ 3 SPLIT	12 E	C 012
C-3-4	ϕ 4 SPLIT	24 E	C 024
C-3-5	ϕ 5 SPLIT	12 E	C 012
C-3-6	ϕ 6 SPLIT	E	C
C-3-7	ϕ 7 SPLIT	12 E	C 012
C-3-8	ϕ 8 SPLIT	24 E	C 024
C-3-A	OFFSET A	93 E	C 093
C-3-B	OFFSET B	E	C
C-3-C	OFFSET C	E	C

PLAN 4

CODE	FUNCTION	ENTER	DISPLAY
C-4-0	CYC. LENG.	E	C
C-4-1	ϕ 1 SPLIT	E	C
C-4-2	ϕ 2 SPLIT	E	C
C-4-3	ϕ 3 SPLIT	E	C
C-4-4	ϕ 4 SPLIT	E	C
C-4-5	ϕ 5 SPLIT	E	C
C-4-6	ϕ 6 SPLIT	E	C
C-4-7	ϕ 7 SPLIT	E	C
C-4-8	ϕ 8 SPLIT	E	C
C-4-A	OFFSET A	E	C 000
C-4-B	OFFSET B	E	C
C-4-C	OFFSET C	E	C

PLAN 5

CODE	FUNCTION	ENTER	DISPLAY
C-5-0	CYC. LENG.	E	C
C-5-1	ϕ 1 SPLIT	E	C
C-5-2	ϕ 2 SPLIT	E	C
C-5-3	ϕ 3 SPLIT	E	C
C-5-4	ϕ 4 SPLIT	E	C
C-5-5	ϕ 5 SPLIT	E	C
C-5-6	ϕ 6 SPLIT	E	C
C-5-7	ϕ 7 SPLIT	E	C
C-5-8	ϕ 8 SPLIT	E	C
C-5-A	OFFSET A	E	C 000
C-5-B	OFFSET B	E	C
C-5-C	OFFSET C	E	C

PLAN 6

CODE	FUNCTION	ENTER	DISPLAY
C-6-0	CYC. LENG.	E	C
C-6-1	ϕ 1 SPLIT	E	C
C-6-2	ϕ 2 SPLIT	E	C
C-6-3	ϕ 3 SPLIT	E	C
C-6-4	ϕ 4 SPLIT	E	C
C-6-5	ϕ 5 SPLIT	E	C
C-6-6	ϕ 6 SPLIT	E	C
C-6-7	ϕ 7 SPLIT	E	C
C-6-8	ϕ 8 SPLIT	E	C
C-6-A	OFFSET A	E	C 000
C-6-B	OFFSET B	E	C
C-6-C	OFFSET C	E	C

PLAN 7

CODE	FUNCTION	ENTER	DISPLAY
C-7-0	CYC. LENG.	E	C
C-7-1	ϕ 1 SPLIT	E	C
C-7-2	ϕ 2 SPLIT	E	C
C-7-3	ϕ 3 SPLIT	E	C
C-7-4	ϕ 4 SPLIT	E	C
C-7-5	ϕ 5 SPLIT	E	C
C-7-6	ϕ 6 SPLIT	E	C
C-7-7	ϕ 7 SPLIT	E	C
C-7-8	ϕ 8 SPLIT	E	C
C-7-A	OFFSET A	E	C 000
C-7-B	OFFSET B	E	C
C-7-C	OFFSET C	E	C

PLAN 8

CODE	FUNCTION	ENTER	DISPLAY
C-8-0	CYC. LENG.	E	C
C-8-1	ϕ 1 SPLIT	E	C
C-8-2	ϕ 2 SPLIT	E	C
C-8-3	ϕ 3 SPLIT	E	C
C-8-4	ϕ 4 SPLIT	E	C
C-8-5	ϕ 5 SPLIT	E	C
C-8-6	ϕ 6 SPLIT	E	C
C-8-7	ϕ 7 SPLIT	E	C
C-8-8	ϕ 8 SPLIT	E	C
C-8-A	OFFSET A	E	C 000
C-8-B	OFFSET B	E	C
C-8-C	OFFSET C	E	C

PLAN 9

CODE	FUNCTION	ENTER	DISPLAY
C-9-0	CYC. LENG.	E	C
C-9-1	ϕ 1 SPLIT	E	C
C-9-2	ϕ 2 SPLIT	E	C
C-9-3	ϕ 3 SPLIT	E	C
C-9-4	ϕ 4 SPLIT	E	C
C-9-5	ϕ 5 SPLIT	E	C
C-9-6	ϕ 6 SPLIT	E	C
C-9-7	ϕ 7 SPLIT	E	C
C-9-8	ϕ 8 SPLIT	E	C
C-9-A	OFFSET A	E	C 000
C-9-B	OFFSET B	E	C
C-9-C	OFFSET C	E	C

COORD MAX RECALL

CODE	PLAN	ENTER	CALL LAMPS	TIMING DATA
D-D-1	1			d
D-D-2	2			d
D-D-3	3			d
D-D-4	4			d
D-D-5	5			d
D-D-6	6			d
D-D-7	7			d
D-D-8	8			d
D-D-9	9			d

COORD MIN RECALL

CODE	PLAN	ENTER	CALL LAMPS	TIMING DATA
D-E-1	1			d
D-E-2	2			d
D-E-3	3			d
D-E-4	4			d
D-E-5	5			d
D-E-6	6			d
D-E-7	7			d
D-E-8	8			d
D-E-9	9			d

COORD PED RECALL

CODE	PLAN	ENTER	CALL LAMPS	TIMING DATA
D-F-1	1			d
D-F-2	2			d
D-F-3	3			d
D-F-4	4			d
D-F-5	5			d
D-F-6	6			d
D-F-7	7			d
D-F-8	8			d
D-F-9	9			d

08/24/15

ALA	185	03.440	San Leandro	FAIRMONT DR. & E. 14th St.
County	Route	PM	City	Location

CONTROL CODE "7"

TIME OF DAY ACTIVITY TABLE

KEY STROKES 7 + EVENT # + HOUR + MIN + ACT CODE + "E" + ON/OFF + DOW LTS

EVENT #	TIME	ACTIVITY CODE	DEPRESS "E"	ON/OFF	DAY OF THE WEEK SET DISPLAY LIGHTS 1-7						
				LIGHT	SUN	MON	TUE	WED	THUR	FRI	SAT
				0	1	2	3	4	5	6	7
0			E								
1			E								
2			E								
3			E								
4			E								
5			E								
6			E								
7			E								
8			E								
9			E								
A			E								
B			E								
C			E								
D			E								
E			E								
F			E								

CONTROL CODE "9"

TIME OF DAY SELECTION FOR COORDINATED CONTROL PLANS

KEY STROKES 9 + EVENT # + HOUR + MIN + Control Plan + Offset + "E" + DOW LTS

DATE	BY	EVENT #	TIME	CONTROL PLAN	OFFSET	DEPRESS "E"	DAY OF THE WEEK SET DISPLAY LIGHTS 1-7						
							SUN	MON	TUE	WED	THUR	FRI	SAT
							1	2	3	4	5	6	7
		0	**0630**	**1**	**A**	E		X	X	X	X	X	
		1	**0900**	**3**	**A**	E	X	X	X	X	X	X	X
		2				E							
		3	**1900**	**E**	**A**	E	X	X	X	X	X	X	X
		4				E							
		5				E							
		6				E							
		7				E							
		8				E							
		9				E							
		A				E							
		B				E							
		C				E							
		D				E							
		E				E							
		F				E							

08/24/15

"7" KEY ACTIVITY CODE

1=TYPE OF SIMULTANEOUS PHASE TERMINATION
2=MAX 2 FAZES
3=MAX 3 FAZES
4=CONDITIONAL SERVICE (1ST SELECT) FAZES SET AT E-F-0
5=CONDITIONAL SERVICE (2ND SELECT) FAZES SET AT E-F-1
6=ENERGIZE AUX 6 RED
7=ENERGIZE AUX 6 GREEN
8=ENERGIZE AUX 6 YELLOW
9=CONSTANT CALL ON FAZES SET AT D-F-A
A=TRAFFIC ACTUATED MAX 2 OPERATION
B=CONSTANT CALL ON FAZES SET AT D-F-B
C=YELLOW YIELD COORDINATION
D=YELLOW YIELD COORDINATION
E=COORD FREE IF F-D-4 = 0
F=FLASHING OPERATION

ALA	185	03.440	San Leandro	FAIRMONT DR. & E. 14th St.
County	Route	PM	City	Location

INPUT FILE - 332 CABINET

8/24/2015

1	2	3	4	5	6	7	8	9	10	11	12	13	14
1I1U EX,CT 1I10U TB2 1,2 F-C1/56 D E	**2I2U** EX,CT 2I11U TB2 5,6 F-C1/39 D E	**2I3U** EX,CT 2I13U TB2 9,10 F-C1/63 D E	**2I4U** CL,T3 2I15U TB4 1,2 F-C1/47 D E	**3I5U** EX,CT 3I16U TB4 5,6 F-C1/58 D E	**4I6U** EX,CT 4I17U TB4 9,10 F-C1/41 D E	**4I7U** EX,CT 4I19U TB6 1,2 F-C1/65 D E	**4I8U** CL,T3 4I1BU TB6 5,6 F-C1/49 D E	**1I9U** EX,CT 1I1CU TB6 9,10 F-C1/60 D E	F D E	**MANUAL** TB8 1,3 F-C1/80 D E	**2-PPB** 2I1E TB8 4,6 F-C1-67 D E	**6-PPB** 6I2E TB8 7,9 F-C1/68 D E	**FLASH SENSE** TB8 10,12 F-C1/81 D E
1I1L EX,CT 1I10L TB2 3,4 W-C1/56 J K	**2I2L** EX,CT 2I12L TB2 7,8 W-C1/43 J K	**2I3L** EX 2I14L TB2 11,12 W-C1/76 J K	**2I4L** CL,T3 2I15L TB4 3,4 W-C1/47 J K	**3I5L** EX,CT 3I16L TB4 7,8 W-C1/58 J K	**4I6L** EX,CT 4I18L TB4 11,12 W-C1/45 J K	**4I7L** EX 4I1AL TB6 3,4 W-C1/78 J K	**4I8L** CL,T3 4I1BL TB6 7,8 W-C1/49 J K	**3I9L** EX,CT 3I1DL TB6 11,12 W-C1/62 J K	W J K	**SPARE 1** TB8 2,3 W-C1/53 J K	**4-PPB** 4I1F TB8 5,6 W-C1/69 J K	**8-PPB** 8I2F TB8 8,9 W-C1/70 J K	**STOP TIME** TB8 11,12 W-C1/82 J K
5J1U EX,CT 5J20U TB3 1,2 F-C1/55 D E	**6J2U** EX,CT 6J21U TB3 5,6 F-C1/40 D E	**6J3U** EX,CT 6J23U TB3 9,10 F-C1/64 D E	**6J4U** CL,T3 6J25U TB5 1,2 F-C1/48 D E	**7J5U** EX,CT 7J26U TB5 5,6 F-C1/57 D E	**8J6U** EX,CT 8J27U TB5 9,10 F-C1/42 D E	**8J7U** EX,CT 8J29U TB7 1,2 F-C1/66 D E	**8J8U** CL,T3 8J2BU TB7 5,6 F-C1/50 D E	**5J9U** EX,CT 5J2CU TB7 9,10 F-C1/59 D E	F D E	**SPARE 2** TB9 1,3 F-C1/54 D E	**EVA PREMT Ø2 & Ø5** TB9 4,2,6 D-Yellow E-Orange K-Blu+Shl	**EVB PREMT Ø4 & Ø7** TB9 7,3,9 D-Yellow E-Orange K-Blu+Shl	**RR1 PREMT ϕ2 & ϕ5** TB9 10,12 F-C1/51 D E
5J1L EX,CT 5J20L TB3 3,4 W-C1/55 J K	**6J2L** EX,CT 6J22L TB3 7,8 W-C1/44 J K	**6J3L** EX 6J24L TB3 11,12 W-C1/77 J K	**6J4L** CL,T3 6J25L TB5 3,4 W-C1/48 J K	**7J5L** EX,CT 7J26L TB5 7,8 W-C1/57 J K	**8J6L** EX,CT 8J28L TB5 11,12 W-C1/46 J K	**8J7L** EX 8J2AL TB7 3,4 W-C1/79 J K	**8J8L** CL,T3 8J2BL TB7 7,8 W-C1/50 J K	**7J9L** EX,CT 7J2DL TB7 11,12 W-C1/61 J K	W J K	**SPARE 3** TB9 2,3 W-C1/75 J K	**EVC PREMT Ø6 & Ø1** TB9 5,2,6 J-Yellow E-Orange K-Blu+Shl	**EVD PREMT Ø8 & Ø3** TB9 8,3,9 J-Yellow E-Orange K-Blu+Shl	**RR2 PREMT ϕ4 & ϕ7** TB9 11,12 W-C1/52 J K

OUTPUT FILE

Ø1	**Ø2**	**Ø2P**	**Ø3**	**Ø4**	**Ø4P**
R-125 C1/16	R-128 C1/12	R-113 C1/10	R-116 C1/7	R-101 C1/4	R-104 C1/2
Y-126 C1/17	Y-129 C1/13	Y-114 C1/35	Y-117 C1/8	Y-102 C1/5	Y-105 C1/37
G-127 C1/18	G-130 C1/15	G-115 C1/11	G-118 C1/9	G-103 C1/6	G-106 C1/3
Ø5	**Ø6**	**Ø6P**	**Ø7**	**Ø8**	**Ø8P**
R-131 C1/32	R-134 C1/29	R-119 C1/27	R-122 C1/24	R-107 C1/21	R-110 C1/19
Y-132 C1/33	Y-135 C1/30	Y-120 C1/36	Y-123 C1/25	Y-108 C1/22	Y-111 C1/38
G-133 C1/34	G-136 C1/31	G-121 C1/28	G-124 C1/26	G-109 C1/23	G-112 C1/20

AUXILIARY

A1(OL'C)	**A2(OL'D)**	**A3**	**A4(OL'A)**	**A5(OL'B)**	**A6**
R-A121 C1/97	R-A124 C1/94	R-A111 C1/91	R-A114 C1/88	R-A101 C1/85	R-A104 C1/84
Y-A122 C1/98	Y-A125 C1/95	Y-A112 C1/101	Y-A115 C1/89	Y-A102 C1/86	Y-A105 C1/100
G-A123 C1/99	G-A126 C1/96	G-A113 C1/93	G-A116 C1/90	G-A103 C1/87	G-A106 C1/83

ALA	**185**	**03.440**	**San Leandro**	**FAIRMONT DR. & E. 14th St.**
County	Route	PM	City	Location

DIODE CARD

08/24/15

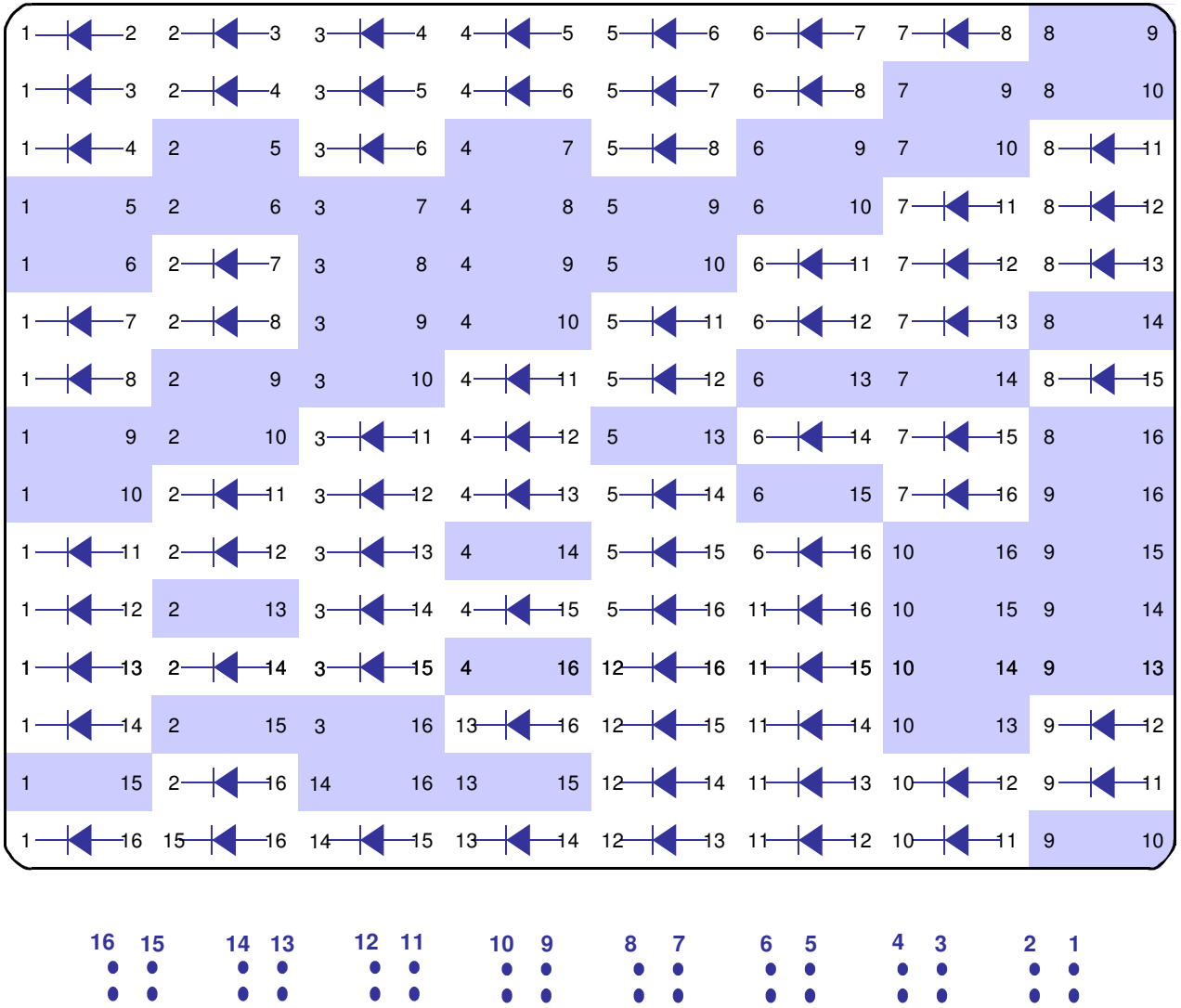

CHANNEL	PIN	LOAD SWITCH ASSIGNMENT		PIN
1	9	Ø1 Y	Ø1 G	J
2	1	Ø2 G	Ø2 Y	A
3	12	Ø3 Y	Ø3 G	M
4	4	Ø4 G	Ø4 Y	D
5	7	Ø5 G	Ø5 Y	H
6	3	Ø6 Y	Ø6 G	B
7	10	Ø7 G	Ø7 Y	L
8	6	Ø8 Y	Ø8 G	E
9G	13	Ø2P G		
9Y	16	Ø4P Y		
10G			Ø6P Y	R
10Y			Ø8P Y	U
11G			N/U	S
11Y	15	N/U		
12G			N/U	V
12Y	18	N/U		
13G	2	Ø2P G		
13Y	8	N/U		
14G	5	Ø4P G		
14Y	11	N/U		
15G			Ø6P G	C
15Y			N/U	K
16G			Ø8P G	F
16Y			N/U	N

ALA	185	03.440	San Leandro	FAIRMONT DR. & E. 14th St.
County	Route	PM	City	Location

APOGEE VERSION 60 SOFTWARE

MM<1>1>1

Cont ID #: Enter ID #

Location: Intersection Name Fairmont @ Foothill

Direction																
CHANNEL	1	2	3	4	5	6	7	8	9	10	11	12	13	14	15	16
Phase	1	2	3	4	5	6	7	8	1 - A	2 - B	3 - C	4 - D	2P	4P	6P	8P
Min Grn	2	2	2	2												
Min Init																
Gap, Ext	2	2	2	2												
Res. Ext. Pos.T.																
Max 1	30	30	35	30												
Max 2	30	30	35	30												
Yellow	3.6	3.6	3.6	3.9												
Red	1.5	1.5	1.0	1.5												
Walk	7	7	7	7												
D. Walk	21	17	16	16												
Red Revt	2.0	2.0	2.0	2.0												
Add Intial																
Per. Act. Sec. Act.																
Max Init	2	2	2	2												
Time B4																
Reduc. Bef.																
Cars B4																
Time to																
Red. To Min.																
Red By																
Min Gap																
Min. Ext.																
DyMaxLim																
Max Step																

PHASE OPTIONS (MM>1>1>2)

Phase	1	2	3	4	5	6	7	8
Enable	X	X	X	X				
Min Recall								
Max Recall								
Soft Recall	X					X		
Ped Recall								
Lock Calls								
Auto Flash Entry	X					X		
Auto Flash Exit	X					X		
Dual Entry								
Enable Simul Gap								
Guarantd Passage								
Rest in Walk								
Conditional Servic								
Non-Actuated 1								
Non-Actuated 2								
Added Init Calc	S	S	S	S	S	S	S	S

OPTIONS + (MM>1>1>3)

Reservice								
Ped Clr thru Yel								
Skip Red-No Call								
Red Rest								
Max II								
Red Rest on Gap								
Conflicting P								
Conflicting P								
Omit Yel, Yel P								
Ped Out/Ovrlp								
Start Yel, Next P								

Ring, Start, Concurrency (MM>1>1>4))

Ph	Ring	Startup	Concurrent Phases							
1	1	~~RED~~ WALK	5	6	0	0	0	0	0	0
2	1	RED	5	6	0	0	0	0	0	0
3	1	RED	7	8	0	0	0	0	0	0
4	1	RED	7	8	0	0	0	0	0	0
5	2	RED	1	2	0	0	0	0	0	0
6	2	RED	1	2	0	0	0	0	0	0
7	2	RED	3	4	0	0	0	0	0	0
8	2	RED	3	4	0	0	0	0	0	0

UNIT PARMETERS (MM>1>2>1)

StartUp Flash	Ø	Red Revert	2.0
Backup Time(s)	Ø	Auto Ped Clr	OFF
Local Flash Start	OFF	Display Time	60
Allow <3 sec Yel	OFF	Tone Disable	OFF
Allow Skip Yel	OFF		
Start Red Time	4.0	Phase Mode	Std.8
Disable Init Ped	OFF	Enable Run	ON
TOD Dimming Enbl	OFF	Diamond Mode	4P
SDLC Retry Time	Ø	TS2 Det Flts	OFF
StopTm Over Prmpt	OFF	Free Ring Seq	1
Feature Profile	Ø	IO Mode	Auto
Max Seek Trak Tim	Ø	Max Cycle Tm	Ø
Max Seek Dwel Tim	Ø	CycFlt Actn	Alarm
Prmpt/ExtCoor Out	Pre.	ClrncDecide	

PARMS + (MM>1>2>5)

Input Map	Ring#	1	2	3	4
Use Ring Inputs		1	2	1	2

Ring	Seq. 1-2-4
1	1 2 3 4
2	

Controller ID#: Enter ID #

Location: Intersection Name

Fairmont / Foothill

R67027

INTERSECTION Fairmont @ Freedom - Liberty

CONTROLLER TYPE Multisonics 820A

PROGRAM		TIMING FUNCTION		Phase 1	2	3	4	5	6	No Density 7	8	OVERLAPS	
Start	Flash	RECALL	Max									Overlap #1	Std.
In	All Red X		Min		X				X			Grn Ext. / Yellow (sec)	5.2 / 3.9
Time (sec.)	4		Ped									Red (sec)	.5
First Phases: 2 6		~~NON~~-LOCK		X	X			X	X		8-16 NO	Independent Phase	2,3
Display: Grn		INITIAL	Min	2	2	2	2	4	5	2	2	Overlap #2	Std.
GENERAL			Per Act		2				2			Yellow (sec)	—
Dual Entry			Max	2	10	2	2	4	10		2	Red (sec)	—
G. P. T.		PEDESTRIAN	Walk		7				7		7	Follow Parent Phase	3,5
Sim Gap	All		Protect		22				22		22	Overlap #3	Std.
Max Ext.		EXTENSION	Preset	2.0	2.5	2.0	2.0	2.0	2.5	2.0	2.0	Grn Ext. / Yellow (sec)	2.5 / 3.0
Red Rest 1-4			Minimum	2.0	2.5	2.0	2.0	2.0	2.5		2.0	Red (sec)	.5
Red Rest 5-8		REDUCTION	Before									Independent Phase	1,7
Min Yellow / Min Red (sec)	3 / 2		To Min									Overlap #4	Std.
Seq. 210043 678005		MAXIMUM	Max 1	15	35	32	15	25	35	2	2	Grn Ext. / Yellow (sec)	5.2 / 3.6
			Max 2	15	35	22	15	25	35	2	2	Red (sec)	.5
		CLEARANCE	Yellow	3.0	3.9	3.5	3.5	3.0	3.6	3.5	3.5	Independent Phase	6,7
			Red	.5	.5	.5	.5	.5	.5	.5	.5		
		DETECTOR	Ext. / Del			2.0 / 2.6			1				
						P42,44			P33				

REMARKS:

Pri. Det. Assoc

1	2	3	4	5	6	7	8	9	10	11	12
1	2	8	8	5	6	5	Ø	2	2	6	6

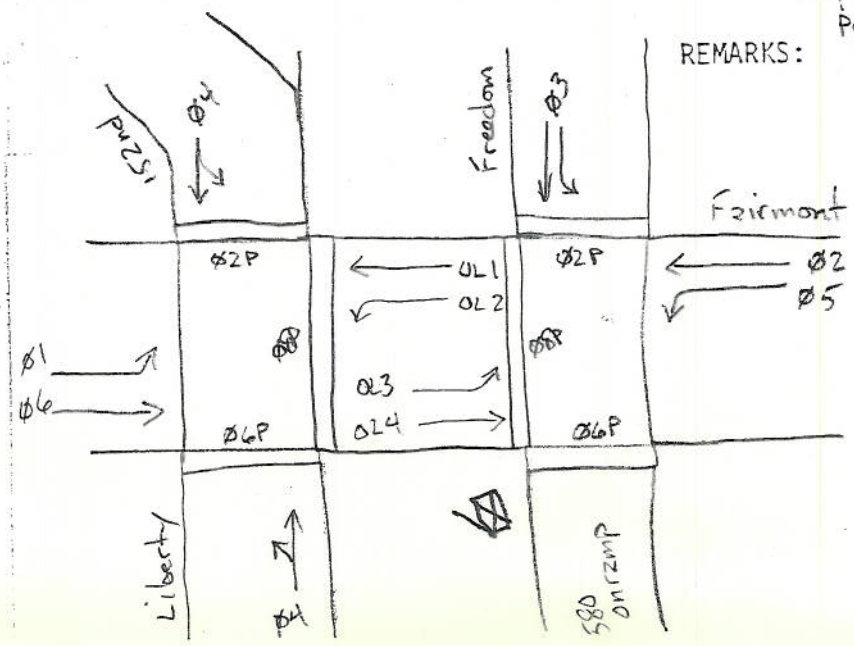

APPROVAL RECOMMENDED		CHECKED
By:	Date:	By:
APPROVED		
By:		Date:
INSTALLED		
Date: 6/18/13	Time:	By:

Appendix F-3 – Level of Service Worksheets: Existing Conditions

Level Of Service Computation Report
2000 HCM Operations (Base Volume Alternative)
Existing AM

Intersection #1: I-580 EB Off Ramp/ 150th/ Freedom

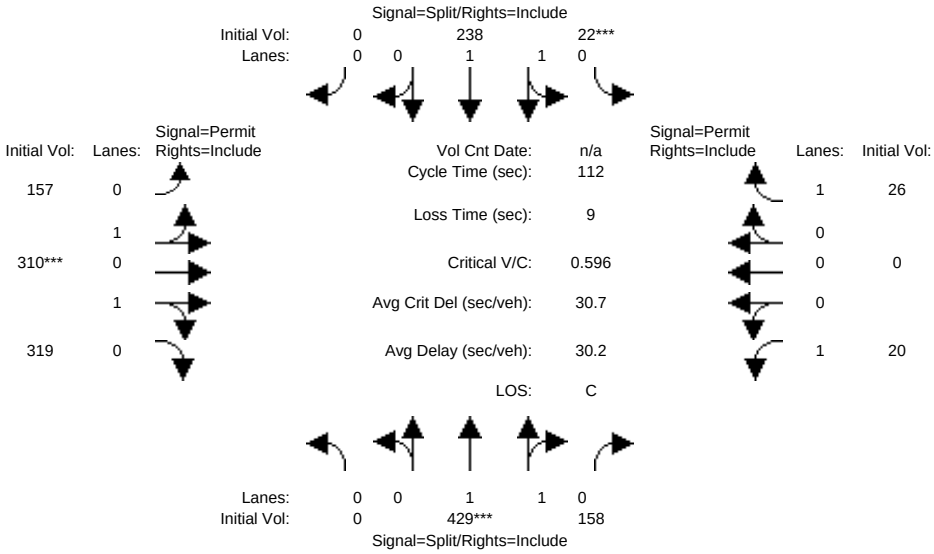

Street Name:	150th Avenue/ Freedom Avenue						I-580 EB Off Ramp					
Approach:	North Bound			South Bound			East Bound			West Bound		
Movement:	L -	T -	R	L -	T -	R	L -	T -	R	L -	T -	R
Min. Green:	6	6	6	8	8	8	4	4	4	4	4	4
Y+R:	4.0	4.0	4.0	4.0	4.0	4.0	3.5	3.5	3.5	3.0	3.0	3.0
Volume Module:												
Base Vol:	0	429	158	22	238	0	157	310	319	20	0	26
Growth Adj:	1.00	1.00	1.00	1.00	1.00	1.00	1.00	1.00	1.00	1.00	1.00	1.00
Initial Bse:	0	429	158	22	238	0	157	310	319	20	0	26
User Adj:	1.00	1.00	1.00	1.00	1.00	1.00	1.00	1.00	1.00	1.00	1.00	1.00
PHF Adj:	0.92	0.92	0.92	0.87	0.87	0.87	0.94	0.94	0.94	0.82	0.82	0.82
PHF Volume:	0	466	172	25	274	0	167	330	339	24	0	32
Reduct Vol:	0	0	0	0	0	0	0	0	0	0	0	0
Reduced Vol:	0	466	172	25	274	0	167	330	339	24	0	32
PCE Adj:	1.00	1.00	1.00	1.00	1.00	1.00	1.00	1.00	1.00	1.00	1.00	1.00
MLF Adj:	1.00	1.00	1.00	1.00	1.00	1.00	1.00	1.00	1.00	1.00	1.00	1.00
FinalVolume:	0	466	172	25	274	0	167	330	339	24	0	32
Saturation Flow Module:												
Sat/Lane:	1900	1900	1900	1900	1900	1900	1900	1900	1900	1900	1900	1900
Adjustment:	1.00	0.91	0.91	0.95	0.95	1.00	0.78	0.78	0.78	0.25	1.00	0.85
Lanes:	0.00	1.46	0.54	0.17	1.83	0.00	0.40	0.79	0.81	1.00	0.00	1.00
Final Sat.:	0	2533	933	304	3291	0	595	1175	1209	471	0	1615
Capacity Analysis Module:												
Vol/Sat:	0.00	0.18	0.18	0.08	0.08	0.00	0.28	0.28	0.28	0.05	0.00	0.02
Crit Moves:		****		****				****				
Green/Cycle:	0.00	0.31	0.31	0.14	0.14	0.00	0.47	0.47	0.47	0.47	0.00	0.47
Volume/Cap:	0.00	0.60	0.60	0.60	0.60	0.00	0.60	0.60	0.60	0.11	0.00	0.04
Uniform Del:	0.0	32.8	32.8	45.2	45.2	0.0	21.8	21.8	21.8	16.5	0.0	16.0
IncremntDel:	0.0	0.9	0.9	2.0	2.0	0.0	0.7	0.7	0.7	0.2	0.0	0.0
InitQueuDel:	0.0	0.0	0.0	0.0	0.0	0.0	0.0	0.0	0.0	0.0	0.0	0.0
Delay Adj:	0.00	1.00	1.00	1.00	1.00	0.00	1.00	1.00	1.00	1.00	0.00	1.00
Delay/Veh:	0.0	33.7	33.7	47.2	47.2	0.0	22.5	22.5	22.5	16.7	0.0	16.0
User DelAdj:	1.00	1.00	1.00	1.00	1.00	1.00	1.00	1.00	1.00	1.00	1.00	1.00
AdjDel/Veh:	0.0	33.7	33.7	47.2	47.2	0.0	22.5	22.5	22.5	16.7	0.0	16.0
LOS by Move:	A	C	C	D	D	A	C	C	C	B	A	B
HCM2kAvgQ:	0	10	10	5	5	0	11	11	11	1	0	1

Note: Queue reported is the number of cars per lane.

Copyright (c) 2008 Dowling Associates, Inc. Licensed to TJKM, PLEASANTON, CA

Level Of Service Computation Report
2000 HCM Operations (Base Volume Alternative)
Existing PM

Intersection #1: I-580 EB Off Ramp/ 150th/ Freedom

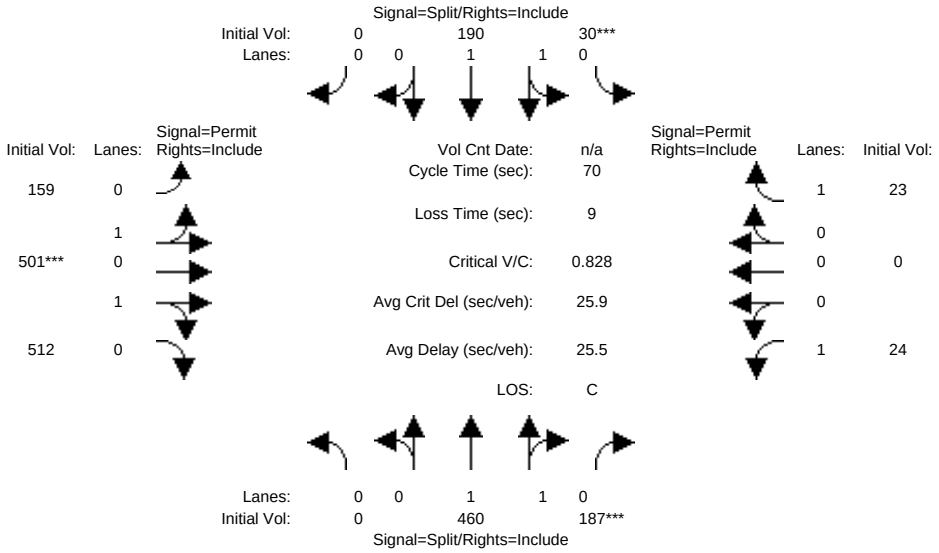

Street Name:	150th Avenue/ Freedom Avenue						I-580 EB Off Ramp					
Approach:	North Bound			South Bound			East Bound			West Bound		
Movement:	L -	T -	R	L -	T -	R	L -	T -	R	L -	T -	R
Min. Green:	6	6	6	8	8	8	4	4	4	4	4	4
Y+R:	4.0	4.0	4.0	4.0	4.0	4.0	3.0	3.0	3.0	3.5	3.5	3.5
Volume Module:												
Base Vol:	0	460	187	30	190	0	159	501	512	24	0	23
Growth Adj:	1.00	1.00	1.00	1.00	1.00	1.00	1.00	1.00	1.00	1.00	1.00	1.00
Initial Bse:	0	460	187	30	190	0	159	501	512	24	0	23
User Adj:	1.00	1.00	1.00	1.00	1.00	1.00	1.00	1.00	1.00	1.00	1.00	1.00
PHF Adj:	0.86	0.86	0.86	0.86	0.86	0.86	0.89	0.89	0.89	0.84	0.84	0.84
PHF Volume:	0	535	217	35	221	0	179	563	575	29	0	27
Reduct Vol:	0	0	0	0	0	0	0	0	0	0	0	0
Reduced Vol:	0	535	217	35	221	0	179	563	575	29	0	27
PCE Adj:	1.00	1.00	1.00	1.00	1.00	1.00	1.00	1.00	1.00	1.00	1.00	1.00
MLF Adj:	1.00	1.00	1.00	1.00	1.00	1.00	1.00	1.00	1.00	1.00	1.00	1.00
FinalVolume:	0	535	217	35	221	0	179	563	575	29	0	27
Saturation Flow Module:												
Sat/Lane:	1900	1900	1900	1900	1900	1900	1900	1900	1900	1900	1900	1900
Adjustment:	1.00	0.91	0.91	0.94	0.94	1.00	0.80	0.80	0.80	0.12	1.00	0.85
Lanes:	0.00	1.42	0.58	0.27	1.73	0.00	0.27	0.85	0.88	1.00	0.00	1.00
Final Sat.:	0	2456	999	489	3096	0	413	1302	1330	219	0	1615
Capacity Analysis Module:												
Vol/Sat:	0.00	0.22	0.22	0.07	0.07	0.00	0.43	0.43	0.43	0.13	0.00	0.02
Crit Moves:			****	****				****				
Green/Cycle:	0.00	0.25	0.25	0.11	0.11	0.00	0.50	0.50	0.50	0.50	0.00	0.50
Volume/Cap:	0.00	0.86	0.86	0.62	0.62	0.00	0.86	0.86	0.86	0.26	0.00	0.03
Uniform Del:	0.0	24.9	24.9	29.6	29.6	0.0	15.2	15.2	15.2	9.9	0.0	8.8
IncremntDel:	0.0	8.5	8.5	3.0	3.0	0.0	5.1	5.1	5.1	1.3	0.0	0.0
InitQueuDel:	0.0	0.0	0.0	0.0	0.0	0.0	0.0	0.0	0.0	0.0	0.0	0.0
Delay Adj:	0.00	1.00	1.00	1.00	1.00	0.00	1.00	1.00	1.00	1.00	0.00	1.00
Delay/Veh:	0.0	33.5	33.5	32.6	32.6	0.0	20.3	20.3	20.3	11.2	0.0	8.8
User DelAdj:	1.00	1.00	1.00	1.00	1.00	1.00	1.00	1.00	1.00	1.00	1.00	1.00
AdjDel/Veh:	0.0	33.5	33.5	32.6	32.6	0.0	20.3	20.3	20.3	11.2	0.0	8.8
LOS by Move:	A	C	C	C	C	A	C	C	C	B	A	A
HCM2kAvgQ:	0	11	11	3	3	0	16	16	16	1	0	0

Note: Queue reported is the number of cars per lane.

Copyright (c) 2008 Dowling Associates, Inc. Licensed to TJKM, PLEASANTON, CA

Level Of Service Computation Report
2000 HCM Operations (Base Volume Alternative)
Existing AM

Intersection #2: 150th Ave/ FootHill Blvd/I-580 WB On Ramp

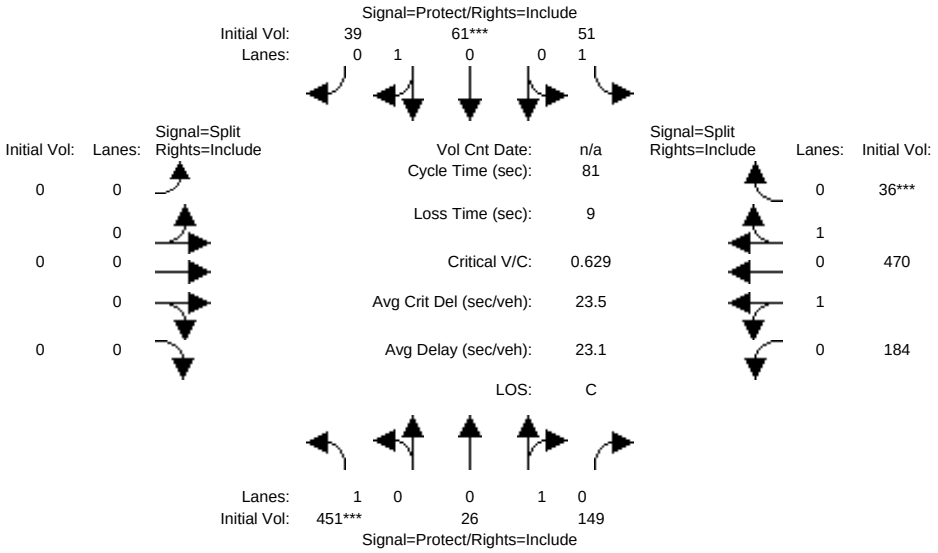

Street Name:	150th Ave/ FootHill Blvd						I-580 WB On Ramp					
Approach:	North Bound			South Bound			East Bound			West Bound		
Movement:	L -	T -	R	L -	T -	R	L -	T -	R	L -	T -	R
Min. Green:	4	6	6	5	5	5	4	4	4	4	4	4
Y+R:	3.0	4.0	4.0	3.0	4.0	4.0	0.0	0.0	0.0	3.5	3.5	3.5
Volume Module:												
Base Vol:	451	26	149	51	61	39	0	0	0	184	470	36
Growth Adj:	1.00	1.00	1.00	1.00	1.00	1.00	1.00	1.00	1.00	1.00	1.00	1.00
Initial Bse:	451	26	149	51	61	39	0	0	0	184	470	36
User Adj:	1.00	1.00	1.00	1.00	1.00	1.00	1.00	1.00	1.00	1.00	1.00	1.00
PHF Adj:	0.90	0.90	0.90	0.82	0.82	0.82	1.00	1.00	1.00	0.94	0.94	0.94
PHF Volume:	501	29	166	62	74	48	0	0	0	196	500	38
Reduct Vol:	0	0	0	0	0	0	0	0	0	0	0	0
Reduced Vol:	501	29	166	62	74	48	0	0	0	196	500	38
PCE Adj:	1.00	1.00	1.00	1.00	1.00	1.00	1.00	1.00	1.00	1.00	1.00	1.00
MLF Adj:	1.00	1.00	1.00	1.00	1.00	1.00	1.00	1.00	1.00	1.00	1.00	1.00
FinalVolume:	501	29	166	62	74	48	0	0	0	196	500	38
Saturation Flow Module:												
Sat/Lane:	1900	1900	1900	1900	1900	1900	1900	1900	1900	1900	1900	1900
Adjustment:	0.95	0.87	0.87	0.95	0.94	0.94	1.00	1.00	1.00	0.90	0.90	0.90
Lanes:	1.00	0.15	0.85	1.00	0.61	0.39	0.00	0.00	0.00	0.53	1.37	0.10
Final Sat.:	1805	246	1411	1805	1092	698	0	0	0	917	2342	179
Capacity Analysis Module:												
Vol/Sat:	0.28	0.12	0.12	0.03	0.07	0.07	0.00	0.00	0.00	0.21	0.21	0.21
Crit Moves:	****				****							****
Green/Cycle:	0.44	0.36	0.36	0.19	0.11	0.11	0.00	0.00	0.00	0.34	0.34	0.34
Volume/Cap:	0.63	0.33	0.33	0.18	0.63	0.63	0.00	0.00	0.00	0.63	0.63	0.63
Uniform Del:	17.5	18.8	18.8	27.6	34.6	34.6	0.0	0.0	0.0	22.5	22.5	22.5
IncremntDel:	1.6	0.3	0.3	0.3	6.5	6.5	0.0	0.0	0.0	1.1	1.1	1.1
InitQueuDel:	0.0	0.0	0.0	0.0	0.0	0.0	0.0	0.0	0.0	0.0	0.0	0.0
Delay Adj:	1.00	1.00	1.00	1.00	1.00	1.00	0.00	0.00	0.00	1.00	1.00	1.00
Delay/Veh:	19.1	19.1	19.1	27.8	41.0	41.0	0.0	0.0	0.0	23.6	23.6	23.6
User DelAdj:	1.00	1.00	1.00	1.00	1.00	1.00	1.00	1.00	1.00	1.00	1.00	1.00
AdjDel/Veh:	19.1	19.1	19.1	27.8	41.0	41.0	0.0	0.0	0.0	23.6	23.6	23.6
LOS by Move:	B	B	B	C	D	D	A	A	A	C	C	C
HCM2kAvgQ:	9	3	3	1	4	4	0	0	0	8	8	8

Note: Queue reported is the number of cars per lane.

Copyright (c) 2008 Dowling Associates, Inc. Licensed to TJKM, PLEASANTON, CA

Level Of Service Computation Report
2000 HCM Operations (Base Volume Alternative)
Existing PM

Intersection #2: 150th Ave/ FootHill Blvd/I-580 WB On Ramp

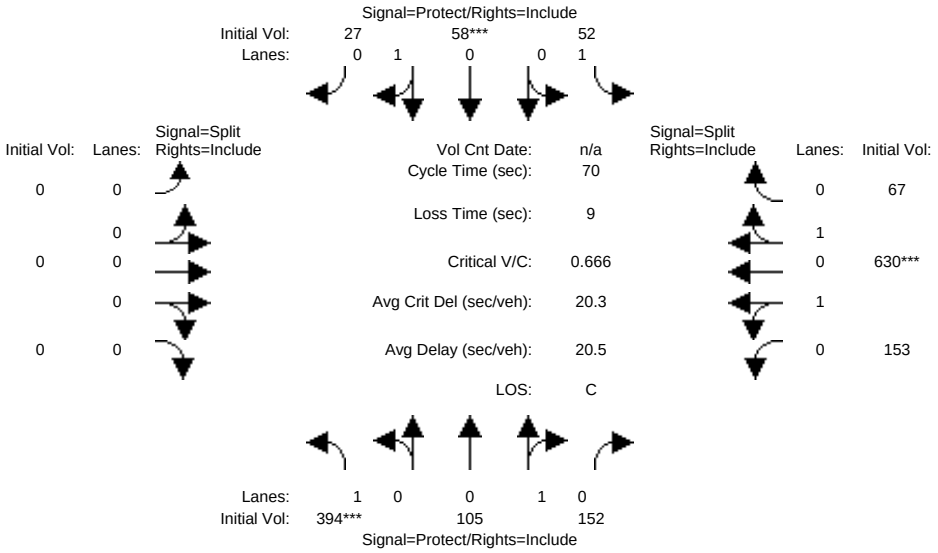

Street Name:	150th Ave/ FootHill Blvd						I-580 WB On Ramp					
Approach:	North Bound			South Bound			East Bound			West Bound		
Movement:	L -	T -	R	L -	T -	R	L -	T -	R	L -	T -	R
Min. Green:	4	6	6	5	5	5	4	4	4	4	4	4
Y+R:	3.0	4.0	4.0	3.0	4.0	4.0	0.0	0.0	0.0	3.5	3.5	3.5
Volume Module:												
Base Vol:	394	105	152	52	58	27	0	0	0	153	630	67
Growth Adj:	1.00	1.00	1.00	1.00	1.00	1.00	1.00	1.00	1.00	1.00	1.00	1.00
Initial Bse:	394	105	152	52	58	27	0	0	0	153	630	67
User Adj:	1.00	1.00	1.00	1.00	1.00	1.00	1.00	1.00	1.00	1.00	1.00	1.00
PHF Adj:	0.87	0.87	0.87	0.86	0.86	0.86	1.00	1.00	1.00	0.89	0.89	0.89
PHF Volume:	453	121	175	60	67	31	0	0	0	172	708	75
Reduct Vol:	0	0	0	0	0	0	0	0	0	0	0	0
Reduced Vol:	453	121	175	60	67	31	0	0	0	172	708	75
PCE Adj:	1.00	1.00	1.00	1.00	1.00	1.00	1.00	1.00	1.00	1.00	1.00	1.00
MLF Adj:	1.00	1.00	1.00	1.00	1.00	1.00	1.00	1.00	1.00	1.00	1.00	1.00
FinalVolume:	453	121	175	60	67	31	0	0	0	172	708	75
Saturation Flow Module:												
Sat/Lane:	1900	1900	1900	1900	1900	1900	1900	1900	1900	1900	1900	1900
Adjustment:	0.95	0.91	0.91	0.95	0.95	0.95	1.00	1.00	1.00	0.91	0.91	0.91
Lanes:	1.00	0.41	0.59	1.00	0.68	0.32	0.00	0.00	0.00	0.36	1.48	0.16
Final Sat.:	1805	707	1024	1805	1234	575	0	0	0	625	2572	274
Capacity Analysis Module:												
Vol/Sat:	0.25	0.17	0.17	0.03	0.05	0.05	0.00	0.00	0.00	0.28	0.28	0.28
Crit Moves:	****				****						****	
Green/Cycle:	0.38	0.32	0.32	0.14	0.08	0.08	0.00	0.00	0.00	0.41	0.41	0.41
Volume/Cap:	0.67	0.53	0.53	0.25	0.67	0.67	0.00	0.00	0.00	0.67	0.67	0.67
Uniform Del:	18.2	19.3	19.3	27.1	31.2	31.2	0.0	0.0	0.0	16.6	16.6	16.6
IncremntDel:	2.5	0.9	0.9	0.5	11.0	11.0	0.0	0.0	0.0	1.2	1.2	1.2
InitQueuDel:	0.0	0.0	0.0	0.0	0.0	0.0	0.0	0.0	0.0	0.0	0.0	0.0
Delay Adj:	1.00	1.00	1.00	1.00	1.00	1.00	0.00	0.00	0.00	1.00	1.00	1.00
Delay/Veh:	20.7	20.3	20.3	27.6	42.2	42.2	0.0	0.0	0.0	17.9	17.9	17.9
User DelAdj:	1.00	1.00	1.00	1.00	1.00	1.00	1.00	1.00	1.00	1.00	1.00	1.00
AdjDel/Veh:	20.7	20.3	20.3	27.6	42.2	42.2	0.0	0.0	0.0	17.9	17.9	17.9
LOS by Move:	C	C	C	C	D	D	A	A	A	B	B	B
HCM2kAvgQ:	8	5	5	1	3	3	0	0	0	9	9	9

Note: Queue reported is the number of cars per lane.

Copyright (c) 2008 Dowling Associates, Inc. Licensed to TJKM, PLEASANTON, CA

Level Of Service Computation Report
2000 HCM Operations (Base Volume Alternative)
Existing AM

Intersection #3: Fairmont Drive/Freedom/ I-580 EB On Ramp

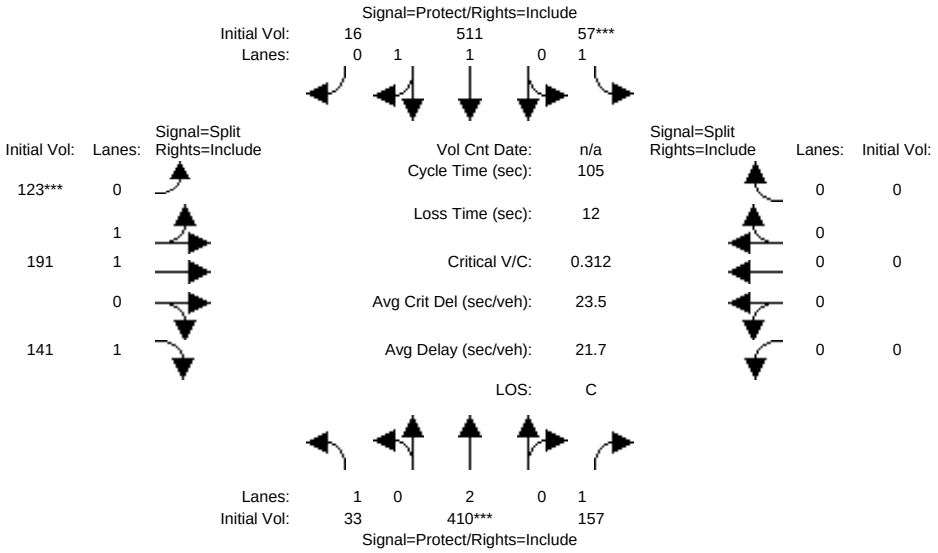

Street Name:	Fairmont Drive						Freedom/ I-580 EB On Ramp					
Approach:	North Bound			South Bound			East Bound			West Bound		
Movement:	L -	T -	R	L -	T -	R	L -	T -	R	L -	T -	R
Min. Green:	2	5	5	4	2	2	2	2	2	2	2	2
Y+R:	3.5	4.1	4.1	3.5	4.4	4.4	4.0	4.0	4.0	4.0	4.0	4.0
Volume Module:												
Base Vol:	33	410	157	57	511	16	123	191	141	0	0	0
Growth Adj:	1.00	1.00	1.00	1.00	1.00	1.00	1.00	1.00	1.00	1.00	1.00	1.00
Initial Bse:	33	410	157	57	511	16	123	191	141	0	0	0
User Adj:	1.00	1.00	1.00	1.00	1.00	1.00	1.00	1.00	1.00	1.00	1.00	1.00
PHF Adj:	0.82	0.82	0.82	0.91	0.91	0.91	0.88	0.88	0.88	1.00	1.00	1.00
PHF Volume:	40	500	191	63	562	18	140	217	160	0	0	0
Reduct Vol:	0	0	0	0	0	0	0	0	0	0	0	0
Reduced Vol:	40	500	191	63	562	18	140	217	160	0	0	0
PCE Adj:	1.00	1.00	1.00	1.00	1.00	1.00	1.00	1.00	1.00	1.00	1.00	1.00
MLF Adj:	1.00	1.00	1.00	1.00	1.00	1.00	1.00	1.00	1.00	1.00	1.00	1.00
FinalVolume:	40	500	191	63	562	18	140	217	160	0	0	0
Saturation Flow Module:												
Sat/Lane:	1900	1900	1900	1900	1900	1900	1900	1900	1900	1900	1900	1900
Adjustment:	0.95	0.95	0.85	0.95	0.95	0.95	0.91	0.91	0.85	1.00	1.00	1.00
Lanes:	1.00	2.00	1.00	1.00	1.94	0.06	0.78	1.22	1.00	0.00	0.00	0.00
Final Sat.:	1805	3610	1615	1805	3486	109	1358	2108	1615	0	0	0
Capacity Analysis Module:												
Vol/Sat:	0.02	0.14	0.12	0.03	0.16	0.16	0.10	0.10	0.10	0.00	0.00	0.00
Crit Moves:		****		****			****					
Green/Cycle:	0.07	0.44	0.44	0.11	0.49	0.49	0.33	0.33	0.33	0.00	0.00	0.00
Volume/Cap:	0.33	0.31	0.27	0.31	0.33	0.33	0.31	0.31	0.30	0.00	0.00	0.00
Uniform Del:	46.7	18.8	18.4	43.0	16.4	16.4	26.3	26.3	26.1	0.0	0.0	0.0
IncremntDel:	1.6	0.1	0.2	0.9	0.1	0.1	0.2	0.2	0.3	0.0	0.0	0.0
InitQueuDel:	0.0	0.0	0.0	0.0	0.0	0.0	0.0	0.0	0.0	0.0	0.0	0.0
Delay Adj:	1.00	1.00	1.00	1.00	1.00	1.00	1.00	1.00	1.00	0.00	0.00	0.00
Delay/Veh:	48.3	18.9	18.6	43.8	16.5	16.5	26.4	26.4	26.5	0.0	0.0	0.0
User DelAdj:	1.00	1.00	1.00	1.00	1.00	1.00	1.00	1.00	1.00	1.00	1.00	1.00
AdjDel/Veh:	48.3	18.9	18.6	43.8	16.5	16.5	26.4	26.4	26.5	0.0	0.0	0.0
LOS by Move:	D	B	B	D	B	B	C	C	C	A	A	A
HCM2kAvgQ:	2	5	4	2	6	6	5	5	4	0	0	0

Note: Queue reported is the number of cars per lane.

Copyright (c) 2008 Dowling Associates, Inc. Licensed to TJKM, PLEASANTON, CA

Level Of Service Computation Report
2000 HCM Operations (Base Volume Alternative)
Existing PM

Intersection #3: Fairmont Drive/Freedom/ I-580 EB On Ramp

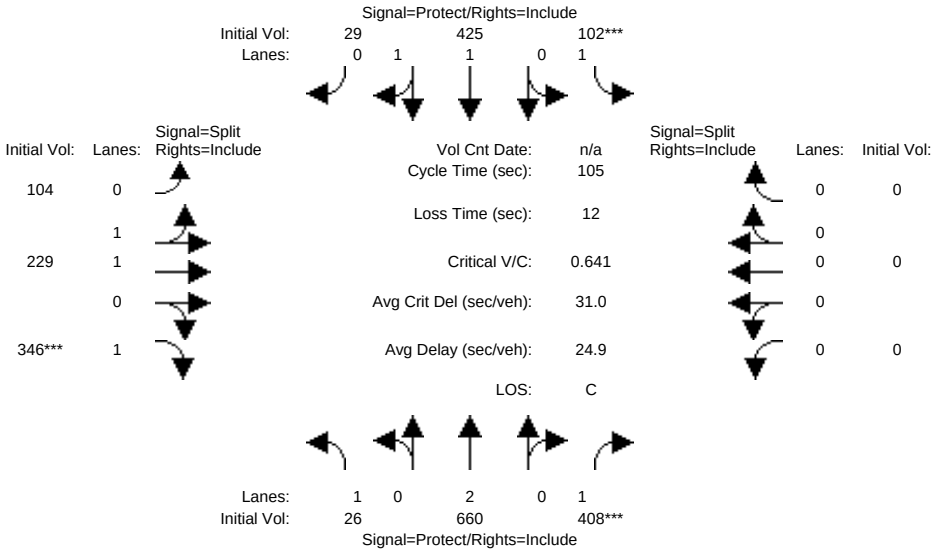

Street Name:	Fairmont Drive						Freedom/ I-580 EB On Ramp					
Approach:	North Bound			South Bound			East Bound			West Bound		
Movement:	L -	T -	R	L -	T -	R	L -	T -	R	L -	T -	R
Min. Green:	2	5	5	4	2	2	2	2	2	2	2	2
Y+R:	3.5	4.1	4.1	3.5	4.4	4.4	4.0	4.0	4.0	4.0	4.0	4.0
Volume Module:												
Base Vol:	26	660	408	102	425	29	104	229	346	0	0	0
Growth Adj:	1.00	1.00	1.00	1.00	1.00	1.00	1.00	1.00	1.00	1.00	1.00	1.00
Initial Bse:	26	660	408	102	425	29	104	229	346	0	0	0
User Adj:	1.00	1.00	1.00	1.00	1.00	1.00	1.00	1.00	1.00	1.00	1.00	1.00
PHF Adj:	0.92	0.92	0.92	0.90	0.90	0.90	0.93	0.93	0.93	1.00	1.00	1.00
PHF Volume:	28	717	443	113	472	32	112	246	372	0	0	0
Reduct Vol:	0	0	0	0	0	0	0	0	0	0	0	0
Reduced Vol:	28	717	443	113	472	32	112	246	372	0	0	0
PCE Adj:	1.00	1.00	1.00	1.00	1.00	1.00	1.00	1.00	1.00	1.00	1.00	1.00
MLF Adj:	1.00	1.00	1.00	1.00	1.00	1.00	1.00	1.00	1.00	1.00	1.00	1.00
FinalVolume:	28	717	443	113	472	32	112	246	372	0	0	0
Saturation Flow Module:												
Sat/Lane:	1900	1900	1900	1900	1900	1900	1900	1900	1900	1900	1900	1900
Adjustment:	0.95	0.95	0.85	0.95	0.94	0.94	0.93	0.93	0.85	1.00	1.00	1.00
Lanes:	1.00	2.00	1.00	1.00	1.87	0.13	0.62	1.38	1.00	0.00	0.00	0.00
Final Sat.:	1805	3610	1615	1805	3346	228	1102	2425	1615	0	0	0
Capacity Analysis Module:												
Vol/Sat:	0.02	0.20	0.27	0.06	0.14	0.14	0.10	0.10	0.23	0.00	0.00	0.00
Crit Moves:			****	****					****			
Green/Cycle:	0.06	0.43	0.43	0.10	0.46	0.46	0.36	0.36	0.36	0.00	0.00	0.00
Volume/Cap:	0.25	0.46	0.64	0.64	0.30	0.30	0.28	0.28	0.64	0.00	0.00	0.00
Uniform Del:	46.9	21.4	23.6	45.6	17.6	17.6	24.0	24.0	28.0	0.0	0.0	0.0
IncremntDel:	1.2	0.2	2.0	7.7	0.1	0.1	0.1	0.1	2.4	0.0	0.0	0.0
InitQueuDel:	0.0	0.0	0.0	0.0	0.0	0.0	0.0	0.0	0.0	0.0	0.0	0.0
Delay Adj:	1.00	1.00	1.00	1.00	1.00	1.00	1.00	1.00	1.00	0.00	0.00	0.00
Delay/Veh:	48.0	21.6	25.7	53.3	17.7	17.7	24.1	24.1	30.4	0.0	0.0	0.0
User DelAdj:	1.00	1.00	1.00	1.00	1.00	1.00	1.00	1.00	1.00	1.00	1.00	1.00
AdjDel/Veh:	48.0	21.6	25.7	53.3	17.7	17.7	24.1	24.1	30.4	0.0	0.0	0.0
LOS by Move:	D	C	C	D	B	B	C	C	C	A	A	A
HCM2kAvgQ:	1	9	12	4	5	5	4	4	11	0	0	0

Note: Queue reported is the number of cars per lane.

Copyright (c) 2008 Dowling Associates, Inc. Licensed to TJKM, PLEASANTON, CA

Level Of Service Computation Report
2000 HCM Unsignalized (Base Volume Alternative)
Existing AM

Intersection #4: Foothill Blvd/ I-580 WB Off Ramp

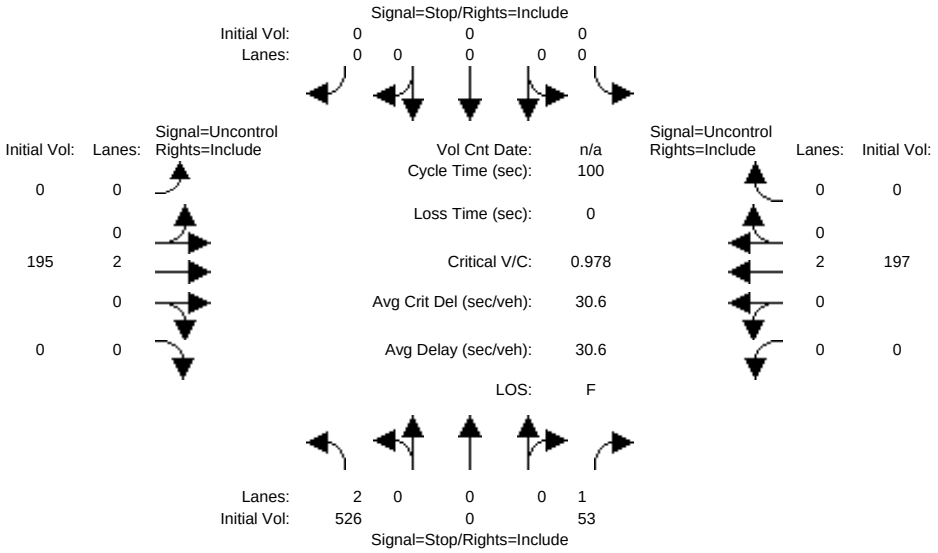


```
Street Name:        I-580 WB Off Ramp                    Foothill Blvd
Approach:      North Bound      South Bound       East Bound       West Bound
Movement:     L  -  T  -  R    L  -  T  -  R    L  -  T  -  R    L  -  T  -  R
------------|---------------||---------------||---------------||---------------|
Volume Module:
Base Vol:     526    0    53     0    0     0     0  195     0     0  197     0
Growth Adj:  1.00 1.00  1.00  1.00 1.00  1.00  1.00 1.00  1.00  1.00 1.00  1.00
Initial Bse:  526    0    53     0    0     0     0  195     0     0  197     0
User Adj:    1.00 1.00  1.00  1.00 1.00  1.00  1.00 1.00  1.00  1.00 1.00  1.00
PHF Adj:     0.84 0.84  0.84  1.00 1.00  1.00  0.96 0.96  0.96  0.75 0.75  0.75
PHF Volume:   626    0    63     0    0     0     0  203     0     0  263     0
Reduct Vol:     0    0     0     0    0     0     0    0     0     0    0     0
FinalVolume:  626    0    63     0    0     0     0  203     0     0  263     0
------------|---------------||---------------||---------------||---------------|
Critical Gap Module:
Critical Gp:  6.8 xxxx   6.9 xxxxx xxxx xxxxx xxxxx xxxx xxxxx xxxxx xxxx xxxxx
FollowUpTim:  3.5 xxxx   3.3 xxxxx xxxx xxxxx xxxxx xxxx xxxxx xxxxx xxxx xxxxx
------------|---------------||---------------||---------------||---------------|
Capacity Module:
Cnflict Vol:  334 xxxx   102  xxxx xxxx xxxxx  xxxx xxxx xxxxx  xxxx xxxx xxxxx
Potent Cap.:  641 xxxx   940  xxxx xxxx xxxxx  xxxx xxxx xxxxx  xxxx xxxx xxxxx
Move Cap.:    641 xxxx   940  xxxx xxxx xxxxx  xxxx xxxx xxxxx  xxxx xxxx xxxxx
Volume/Cap:  0.98 xxxx  0.07  xxxx xxxx  xxxx  xxxx xxxx  xxxx  xxxx xxxx  xxxx
------------|---------------||---------------||---------------||---------------|
Level Of Service Module:
2Way95thQ:   10.4 xxxx   0.2  xxxx xxxx xxxxx  xxxx xxxx xxxxx  xxxx xxxx xxxxx
Control Del: 55.5 xxxx   9.1 xxxxx xxxx xxxxx xxxxx xxxx xxxxx xxxxx xxxx xxxxx
LOS by Move:    F    *     A     *    *     *     *    *     *     *    *     *
Movement:     LT - LTR - RT    LT - LTR - RT    LT - LTR - RT    LT - LTR - RT
Shared Cap.: xxxx xxxx xxxxx  xxxx xxxx xxxxx  xxxx xxxx xxxxx  xxxx xxxx xxxxx
SharedQueue:xxxxx xxxx xxxxx xxxxx xxxx xxxxx xxxxx xxxx xxxxx xxxxx xxxx xxxxx
Shrd ConDel:xxxxx xxxx xxxxx xxxxx xxxx xxxxx xxxxx xxxx xxxxx xxxxx xxxx xxxxx
Shared LOS:     *    *     *     *    *     *     *    *     *     *    *     *
ApproachDel:      51.3           xxxxxx           xxxxxx           xxxxxx
ApproachLOS:         F                *                *                *
Note: Queue reported is the number of cars per lane.
                    Peak Hour Delay Signal Warrant Report
*******************************************************************************
Intersection #4 Foothill Blvd/ I-580 WB Off Ramp
*******************************************************************************
Base Volume Alternative: Peak Hour Warrant Met
------------|---------------||---------------||---------------||---------------|
Approach:      North Bound      South Bound       East Bound       West Bound
```


Copyright (c) 2008 Dowling Associates, Inc. Licensed to TJKM, PLEASANTON, CA

```
Movement:     L  -  T  -  R    L  -  T  -  R    L  -  T  -  R    L  -  T  -  R
------------|---------------||---------------||---------------||---------------|
Control:        Stop Sign        Stop Sign       Uncontrolled     Uncontrolled
Lanes:        2  0  0  0  1    0  0  0  0  0    0  0  2  0  0    0  0  2  0  0
Initial Vol:  526    0    53     0    0     0     0  195     0     0  197     0
ApproachDel:      51.3           xxxxxx           xxxxxx           xxxxxx
------------|---------------||---------------||---------------||---------------|
Approach[northbound][lanes=3][control=Stop Sign]
Signal Warrant Rule #1: [vehicle-hours=8.3]
   SUCCEED - Vehicle-hours >= 5 for two or more lane approach.
Signal Warrant Rule #2: [approach volume=579]
   SUCCEED - Approach volume >= 150 for two or more lane approach.
Signal Warrant Rule #3: [approach count=3][total volume=971]
   SUCCEED - Total volume greater than or equal to 650 for intersection
             with less than four approaches.
--------------------------------------------------------------------------------
SIGNAL WARRANT DISCLAIMER
This peak hour signal warrant analysis should be considered solely as an
"indicator" of the likelihood of an unsignalized intersection warranting
a traffic signal in the future.  Intersections that exceed this warrant
are probably more likely to meet one or more of the other volume based
signal warrant (such as the 4-hour or 8-hour warrants).

The peak hour warrant analysis in this report is not intended to replace
a rigorous and complete traffic signal warrant analysis by the responsible
jurisdiction.  Consideration of the other signal warrants, which is beyond
the scope of this software, may yield different results.
                Peak Hour Volume Signal Warrant Report [Urban]
********************************************************************************
Intersection #4 Foothill Blvd/ I-580 WB Off Ramp
********************************************************************************
Base Volume Alternative: Peak Hour Warrant NOT Met
------------|---------------||---------------||---------------||---------------|
Approach:      North Bound      South Bound       East Bound       West Bound
Movement:     L  -  T  -  R    L  -  T  -  R    L  -  T  -  R    L  -  T  -  R
------------|---------------||---------------||---------------||---------------|
Control:        Stop Sign        Stop Sign       Uncontrolled     Uncontrolled
Lanes:        2  0  0  0  1    0  0  0  0  0    0  0  2  0  0    0  0  2  0  0
Initial Vol:  526    0    53     0    0     0     0  195     0     0  197     0
------------|---------------||---------------||---------------||---------------|
Major Street Volume:             392
Minor Approach Volume:           579
Minor Approach Volume Threshold: 777
--------------------------------------------------------------------------------
SIGNAL WARRANT DISCLAIMER
This peak hour signal warrant analysis should be considered solely as an
"indicator" of the likelihood of an unsignalized intersection warranting
a traffic signal in the future.  Intersections that exceed this warrant
are probably more likely to meet one or more of the other volume based
signal warrant (such as the 4-hour or 8-hour warrants).

The peak hour warrant analysis in this report is not intended to replace
a rigorous and complete traffic signal warrant analysis by the responsible
jurisdiction.  Consideration of the other signal warrants, which is beyond
the scope of this software, may yield different results.
```


Copyright (c) 2008 Dowling Associates, Inc.
Licensed to TJKM, PLEASANTON, CA

Level Of Service Computation Report
2000 HCM Unsignalized (Base Volume Alternative)
Existing PM

Intersection #4: Foothill Blvd/ I-580 WB Off Ramp

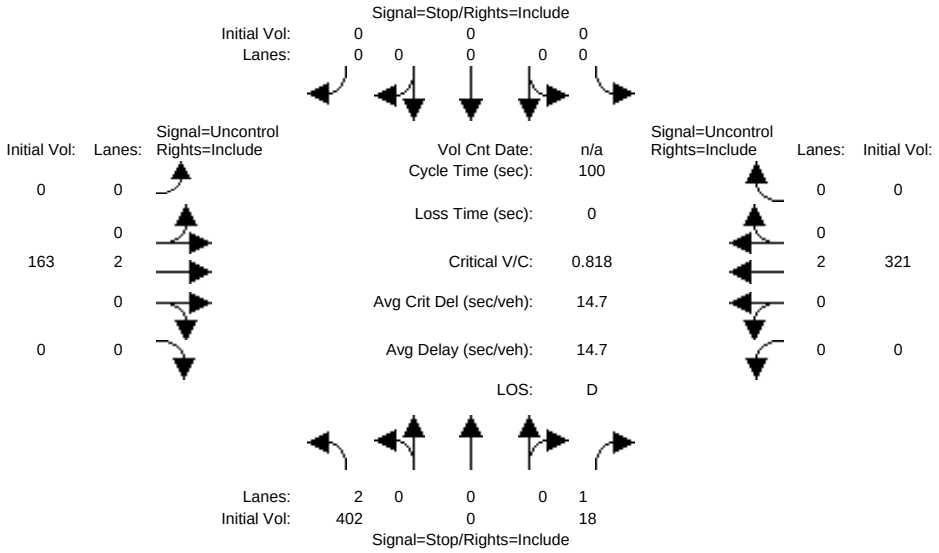


```
Street Name:        I-580 WB Off Ramp                    Foothill Blvd
Approach:      North Bound      South Bound       East Bound       West Bound
Movement:     L  -  T  -  R    L  -  T  -  R    L  -  T  -  R    L  -  T  -  R
------------|---------------||---------------||---------------||---------------|
Volume Module:
Base Vol:     402    0    18     0    0     0     0  163     0     0  321     0
Growth Adj:  1.00 1.00  1.00  1.00 1.00  1.00  1.00 1.00  1.00  1.00 1.00  1.00
Initial Bse:  402    0    18     0    0     0     0  163     0     0  321     0
User Adj:    1.00 1.00  1.00  1.00 1.00  1.00  1.00 1.00  1.00  1.00 1.00  1.00
PHF Adj:     0.85 0.85  0.85  1.00 1.00  1.00  0.73 0.73  0.73  0.88 0.88  0.88
PHF Volume:   473    0    21     0    0     0     0  223     0     0  365     0
Reduct Vol:     0    0     0     0    0     0     0    0     0     0    0     0
FinalVolume:  473    0    21     0    0     0     0  223     0     0  365     0
------------|---------------||---------------||---------------||---------------|
Critical Gap Module:
Critical Gp:  6.8 xxxx   6.9 xxxxx xxxx xxxxx xxxxx xxxx xxxxx xxxxx xxxx xxxxx
FollowUpTim:  3.5 xxxx   3.3 xxxxx xxxx xxxxx xxxxx xxxx xxxxx xxxxx xxxx xxxxx
------------|---------------||---------------||---------------||---------------|
Capacity Module:
Cnflict Vol:  406 xxxx   112  xxxx xxxx xxxxx  xxxx xxxx xxxxx  xxxx xxxx xxxxx
Potent Cap.:  578 xxxx   927  xxxx xxxx xxxxx  xxxx xxxx xxxxx  xxxx xxxx xxxxx
Move Cap.:    578 xxxx   927  xxxx xxxx xxxxx  xxxx xxxx xxxxx  xxxx xxxx xxxxx
Volume/Cap:  0.82 xxxx  0.02  xxxx xxxx  xxxx  xxxx xxxx  xxxx  xxxx xxxx  xxxx
------------|---------------||---------------||---------------||---------------|
Level Of Service Module:
2Way95thQ:    6.7 xxxx   0.1  xxxx xxxx xxxxx  xxxx xxxx xxxxx  xxxx xxxx xxxxx
Control Del: 33.2 xxxx   9.0 xxxxx xxxx xxxxx xxxxx xxxx xxxxx xxxxx xxxx xxxxx
LOS by Move:    D    *     A     *    *     *     *    *     *     *    *     *
Movement:     LT - LTR - RT    LT - LTR - RT    LT - LTR - RT    LT - LTR - RT
Shared Cap.: xxxx xxxx xxxxx  xxxx xxxx xxxxx  xxxx xxxx xxxxx  xxxx xxxx xxxxx
SharedQueue:xxxxx xxxx xxxxx xxxxx xxxx xxxxx xxxxx xxxx xxxxx xxxxx xxxx xxxxx
Shrd ConDel:xxxxx xxxx xxxxx xxxxx xxxx xxxxx xxxxx xxxx xxxxx xxxxx xxxx xxxxx
Shared LOS:     *    *     *     *    *     *     *    *     *     *    *     *
ApproachDel:      32.2           xxxxxx           xxxxxx           xxxxxx
ApproachLOS:         D                *                *                *
Note: Queue reported is the number of cars per lane.
                    Peak Hour Delay Signal Warrant Report
*******************************************************************************
Intersection #4 Foothill Blvd/ I-580 WB Off Ramp
*******************************************************************************
Base Volume Alternative: Peak Hour Warrant NOT Met
------------|---------------||---------------||---------------||---------------|
Approach:      North Bound      South Bound       East Bound       West Bound
```


Copyright (c) 2008 Dowling Associates, Inc. Licensed to TJKM, PLEASANTON, CA

```
Movement:     L  -  T  -  R    L  -  T  -  R    L  -  T  -  R    L  -  T  -  R
------------|---------------||---------------||---------------||---------------|
Control:        Stop Sign        Stop Sign       Uncontrolled     Uncontrolled
Lanes:        2  0  0  0  1    0  0  0  0  0    0  0  2  0  0    0  0  2  0  0
Initial Vol:  402    0    18     0    0     0     0  163     0     0  321     0
ApproachDel:      32.2           xxxxxx           xxxxxx           xxxxxx
------------|---------------||---------------||---------------||---------------|
Approach[northbound][lanes=3][control=Stop Sign]
Signal Warrant Rule #1: [vehicle-hours=3.8]
   FAIL - Vehicle-hours less than 5 for two or more lane approach.
Signal Warrant Rule #2: [approach volume=420]
   SUCCEED - Approach volume >= 150 for two or more lane approach.
Signal Warrant Rule #3: [approach count=3][total volume=904]
   SUCCEED - Total volume greater than or equal to 650 for intersection
             with less than four approaches.
--------------------------------------------------------------------------------
SIGNAL WARRANT DISCLAIMER
This peak hour signal warrant analysis should be considered solely as an
"indicator" of the likelihood of an unsignalized intersection warranting
a traffic signal in the future.  Intersections that exceed this warrant
are probably more likely to meet one or more of the other volume based
signal warrant (such as the 4-hour or 8-hour warrants).

The peak hour warrant analysis in this report is not intended to replace
a rigorous and complete traffic signal warrant analysis by the responsible
jurisdiction.  Consideration of the other signal warrants, which is beyond
the scope of this software, may yield different results.
                Peak Hour Volume Signal Warrant Report [Urban]
********************************************************************************
Intersection #4 Foothill Blvd/ I-580 WB Off Ramp
********************************************************************************
Base Volume Alternative: Peak Hour Warrant NOT Met
------------|---------------||---------------||---------------||---------------|
Approach:      North Bound      South Bound       East Bound       West Bound
Movement:     L  -  T  -  R    L  -  T  -  R    L  -  T  -  R    L  -  T  -  R
------------|---------------||---------------||---------------||---------------|
Control:        Stop Sign        Stop Sign       Uncontrolled     Uncontrolled
Lanes:        2  0  0  0  1    0  0  0  0  0    0  0  2  0  0    0  0  2  0  0
Initial Vol:  402    0    18     0    0     0     0  163     0     0  321     0
------------|---------------||---------------||---------------||---------------|
Major Street Volume:             484
Minor Approach Volume:           420
Minor Approach Volume Threshold: 686
--------------------------------------------------------------------------------
SIGNAL WARRANT DISCLAIMER
This peak hour signal warrant analysis should be considered solely as an
"indicator" of the likelihood of an unsignalized intersection warranting
a traffic signal in the future.  Intersections that exceed this warrant
are probably more likely to meet one or more of the other volume based
signal warrant (such as the 4-hour or 8-hour warrants).

The peak hour warrant analysis in this report is not intended to replace
a rigorous and complete traffic signal warrant analysis by the responsible
jurisdiction.  Consideration of the other signal warrants, which is beyond
the scope of this software, may yield different results.
```


Copyright (c) 2008 Dowling Associates, Inc.

Level Of Service Computation Report
2000 HCM Operations (Base Volume Alternative)
Existing AM

Intersection #5: Fairmont Drive/Foothill Blvd

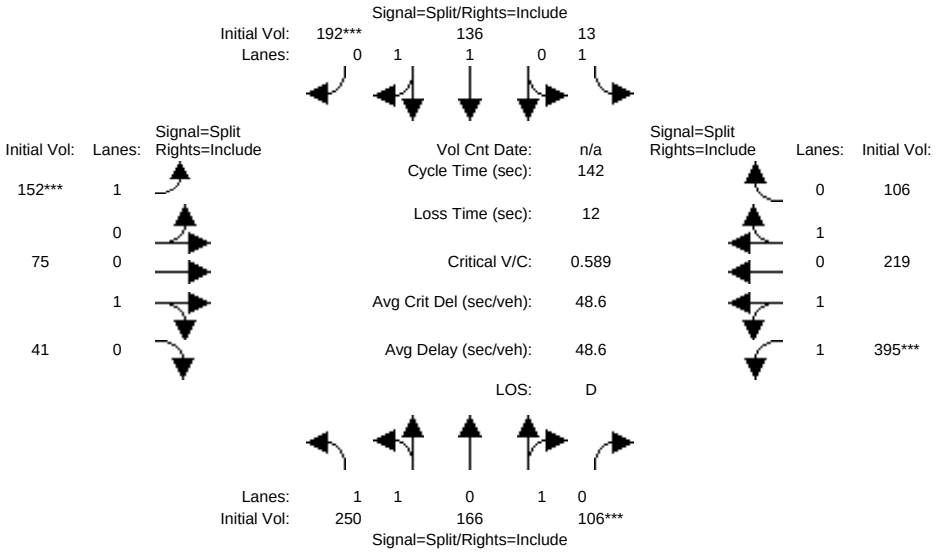

Street Name:	Fairmont Drive						Foothill Blvd					
Approach:	North Bound			South Bound			East Bound			West Bound		
Movement:	L -	T -	R	L -	T -	R	L -	T -	R	L -	T -	R
Min. Green:	2	2	2	2	2	2	2	2	2	2	2	2
Y+R:	4.1	4.1	4.1	4.1	4.1	4.1	4.4	4.4	4.4	4.6	4.6	4.6
Volume Module:												
Base Vol:	250	166	106	13	136	192	152	75	41	395	219	106
Growth Adj:	1.00	1.00	1.00	1.00	1.00	1.00	1.00	1.00	1.00	1.00	1.00	1.00
Initial Bse:	250	166	106	13	136	192	152	75	41	395	219	106
User Adj:	1.00	1.00	1.00	1.00	1.00	1.00	1.00	1.00	1.00	1.00	1.00	1.00
PHF Adj:	0.76	0.76	0.76	0.78	0.78	0.78	0.85	0.85	0.85	0.89	0.89	0.89
PHF Volume:	329	218	139	17	174	246	179	88	48	444	246	119
Reduct Vol:	0	0	0	0	0	0	0	0	0	0	0	0
Reduced Vol:	329	218	139	17	174	246	179	88	48	444	246	119
PCE Adj:	1.00	1.00	1.00	1.00	1.00	1.00	1.00	1.00	1.00	1.00	1.00	1.00
MLF Adj:	1.00	1.00	1.00	1.00	1.00	1.00	1.00	1.00	1.00	1.00	1.00	1.00
FinalVolume:	329	218	139	17	174	246	179	88	48	444	246	119
Saturation Flow Module:												
Sat/Lane:	1900	1900	1900	1900	1900	1900	1900	1900	1900	1900	1900	1900
Adjustment:	0.90	0.90	0.90	0.95	0.87	0.87	0.95	0.95	0.95	0.90	0.90	0.90
Lanes:	1.44	0.95	0.61	1.00	1.00	1.00	1.00	0.65	0.35	1.65	0.91	0.44
Final Sat.:	2458	1632	1042	1805	1646	1646	1805	1163	636	2827	1567	759
Capacity Analysis Module:												
Vol/Sat:	0.13	0.13	0.13	0.01	0.11	0.15	0.10	0.08	0.08	0.16	0.16	0.16
Crit Moves:			****			****	****			****		
Green/Cycle:	0.23	0.23	0.23	0.25	0.25	0.25	0.17	0.17	0.17	0.27	0.27	0.27
Volume/Cap:	0.59	0.59	0.59	0.04	0.42	0.59	0.59	0.45	0.45	0.59	0.59	0.59
Uniform Del:	49.0	49.0	49.0	39.9	44.2	46.5	54.5	53.2	53.2	45.3	45.3	45.3
IncremntDel:	0.8	0.8	0.8	0.0	0.3	1.3	3.0	1.1	1.1	0.7	0.7	0.7
InitQueuDel:	0.0	0.0	0.0	0.0	0.0	0.0	0.0	0.0	0.0	0.0	0.0	0.0
Delay Adj:	1.00	1.00	1.00	1.00	1.00	1.00	1.00	1.00	1.00	1.00	1.00	1.00
Delay/Veh:	49.8	49.8	49.8	39.9	44.5	47.8	57.6	54.2	54.2	46.0	46.0	46.0
User DelAdj:	1.00	1.00	1.00	1.00	1.00	1.00	1.00	1.00	1.00	1.00	1.00	1.00
AdjDel/Veh:	49.8	49.8	49.8	39.9	44.5	47.8	57.6	54.2	54.2	46.0	46.0	46.0
LOS by Move:	D	D	D	D	D	D	E	D	D	D	D	D
HCM2kAvgQ:	9	9	9	1	7	10	7	5	5	11	11	11

Note: Queue reported is the number of cars per lane.

Copyright (c) 2008 Dowling Associates, Inc. Licensed to TJKM, PLEASANTON, CA

Level Of Service Computation Report
2000 HCM Operations (Base Volume Alternative)
Existing PM

Intersection #5: Fairmont Drive/Foothill Blvd

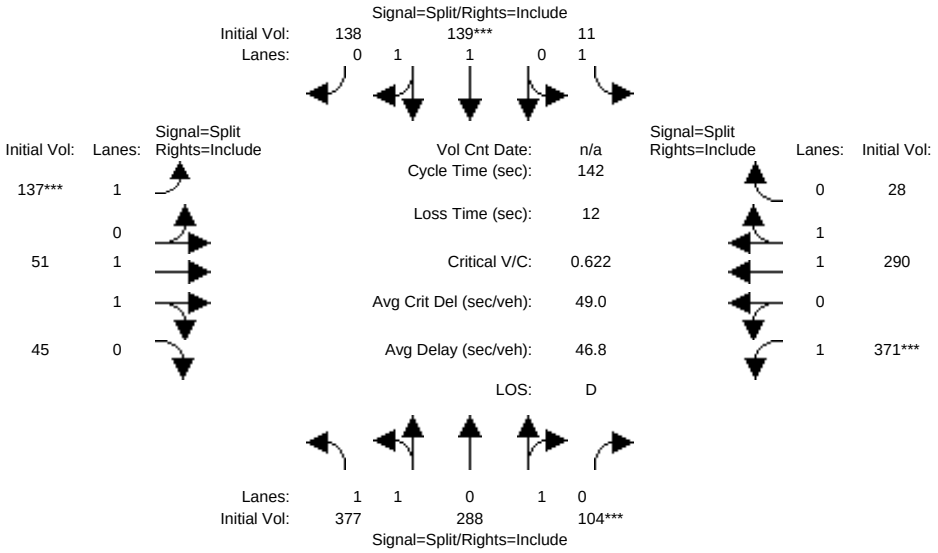

Street Name:	Fairmont Drive						Foothill Blvd					
Approach:	North Bound			South Bound			East Bound			West Bound		
Movement:	L -	T -	R	L -	T -	R	L -	T -	R	L -	T -	R
Min. Green:	2	2	2	2	2	2	2	2	2	2	2	2
Y+R:	4.1	4.1	4.1	4.1	4.1	4.1	4.4	4.4	4.4	4.6	4.6	4.6
Volume Module:												
Base Vol:	377	288	104	11	139	138	137	51	45	371	290	28
Growth Adj:	1.00	1.00	1.00	1.00	1.00	1.00	1.00	1.00	1.00	1.00	1.00	1.00
Initial Bse:	377	288	104	11	139	138	137	51	45	371	290	28
User Adj:	1.00	1.00	1.00	1.00	1.00	1.00	1.00	1.00	1.00	1.00	1.00	1.00
PHF Adj:	0.91	0.91	0.91	0.86	0.86	0.86	0.83	0.83	0.83	0.94	0.94	0.94
PHF Volume:	414	316	114	13	162	160	165	61	54	395	309	30
Reduct Vol:	0	0	0	0	0	0	0	0	0	0	0	0
Reduced Vol:	414	316	114	13	162	160	165	61	54	395	309	30
PCE Adj:	1.00	1.00	1.00	1.00	1.00	1.00	1.00	1.00	1.00	1.00	1.00	1.00
MLF Adj:	1.00	1.00	1.00	1.00	1.00	1.00	1.00	1.00	1.00	1.00	1.00	1.00
FinalVolume:	414	316	114	13	162	160	165	61	54	395	309	30
Saturation Flow Module:												
Sat/Lane:	1900	1900	1900	1900	1900	1900	1900	1900	1900	1900	1900	1900
Adjustment:	0.91	0.91	0.91	0.95	0.88	0.88	0.95	0.88	0.88	0.95	0.94	0.94
Lanes:	1.47	1.12	0.41	1.00	1.00	1.00	1.00	1.06	0.94	1.00	1.82	0.18
Final Sat.:	2539	1940	700	1805	1676	1664	1805	1784	1574	1805	3249	314
Capacity Analysis Module:												
Vol/Sat:	0.16	0.16	0.16	0.01	0.10	0.10	0.09	0.03	0.03	0.22	0.09	0.09
Crit Moves:			****		****		****			****		
Green/Cycle:	0.26	0.26	0.26	0.15	0.15	0.15	0.15	0.15	0.15	0.35	0.35	0.35
Volume/Cap:	0.62	0.62	0.62	0.05	0.62	0.62	0.62	0.23	0.23	0.62	0.27	0.27
Uniform Del:	46.2	46.2	46.2	51.1	56.1	56.1	56.9	53.5	53.5	38.2	33.0	33.0
IncremntDel:	0.9	0.9	0.9	0.1	2.3	2.3	4.5	0.2	0.2	1.9	0.1	0.1
InitQueuDel:	0.0	0.0	0.0	0.0	0.0	0.0	0.0	0.0	0.0	0.0	0.0	0.0
Delay Adj:	1.00	1.00	1.00	1.00	1.00	1.00	1.00	1.00	1.00	1.00	1.00	1.00
Delay/Veh:	47.1	47.1	47.1	51.1	58.5	58.5	61.4	53.8	53.8	40.2	33.1	33.1
User DelAdj:	1.00	1.00	1.00	1.00	1.00	1.00	1.00	1.00	1.00	1.00	1.00	1.00
AdjDel/Veh:	47.1	47.1	47.1	51.1	58.5	58.5	61.4	53.8	53.8	40.2	33.1	33.1
LOS by Move:	D	D	D	D	E	E	E	D	D	D	C	C
HCM2kAvgQ:	11	11	11	0	8	8	7	2	2	14	5	5

Note: Queue reported is the number of cars per lane.

Copyright (c) 2008 Dowling Associates, Inc. Licensed to TJKM, PLEASANTON, CA

Level Of Service Computation Report
2000 HCM Operations (Base Volume Alternative)
Existing AM

Intersection #6: Fairmont Drive/ E 14th Street

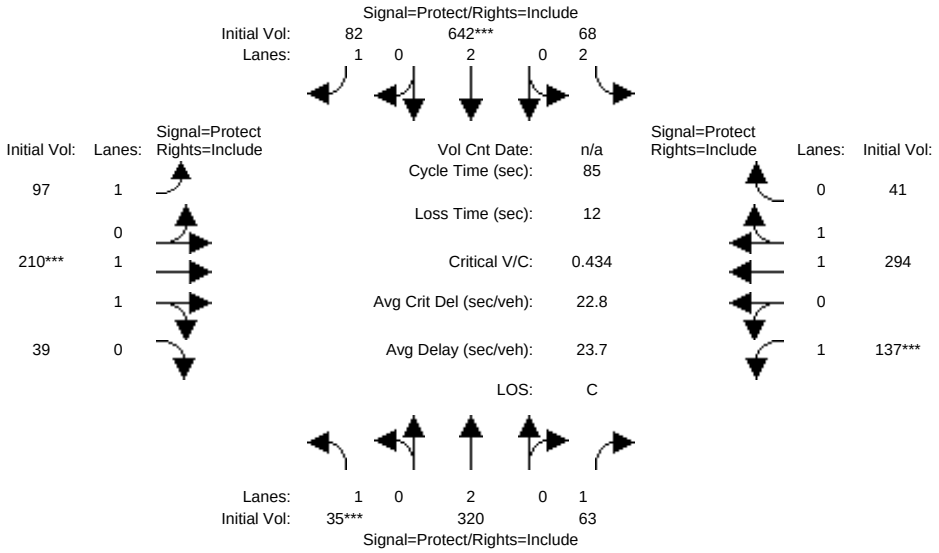

Street Name:	Fairmont Drive						E 14th Street					
Approach:	North Bound			South Bound			East Bound			West Bound		
Movement:	L -	T -	R	L -	T -	R	L -	T -	R	L -	T -	R
Min. Green:	4	4	4	4	4	4	4	10	10	4	10	10
Y+R:	3.7	4.6	4.6	3.7	4.6	4.6	3.7	4.6	4.6	3.7	4.6	4.6
Volume Module:												
Base Vol:	35	320	63	68	642	82	97	210	39	137	294	41
Growth Adj:	1.00	1.00	1.00	1.00	1.00	1.00	1.00	1.00	1.00	1.00	1.00	1.00
Initial Bse:	35	320	63	68	642	82	97	210	39	137	294	41
User Adj:	1.00	1.00	1.00	1.00	1.00	1.00	1.00	1.00	1.00	1.00	1.00	1.00
PHF Adj:	0.89	0.89	0.89	0.92	0.92	0.92	0.94	0.94	0.94	0.92	0.92	0.92
PHF Volume:	39	360	71	74	698	89	103	223	41	149	320	45
Reduct Vol:	0	0	0	0	0	0	0	0	0	0	0	0
Reduced Vol:	39	360	71	74	698	89	103	223	41	149	320	45
PCE Adj:	1.00	1.00	1.00	1.00	1.00	1.00	1.00	1.00	1.00	1.00	1.00	1.00
MLF Adj:	1.00	1.00	1.00	1.00	1.00	1.00	1.00	1.00	1.00	1.00	1.00	1.00
FinalVolume:	39	360	71	74	698	89	103	223	41	149	320	45
Saturation Flow Module:												
Sat/Lane:	1900	1900	1900	1900	1900	1900	1900	1900	1900	1900	1900	1900
Adjustment:	0.95	0.95	0.85	0.92	0.95	0.85	0.95	0.93	0.93	0.95	0.93	0.93
Lanes:	1.00	2.00	1.00	2.00	2.00	1.00	1.00	1.69	0.31	1.00	1.76	0.24
Final Sat.:	1805	3610	1615	3502	3610	1615	1805	2972	552	1805	3111	434
Capacity Analysis Module:												
Vol/Sat:	0.02	0.10	0.04	0.02	0.19	0.06	0.06	0.08	0.08	0.08	0.10	0.10
Crit Moves:	****				****			****		****		
Green/Cycle:	0.05	0.34	0.34	0.16	0.45	0.45	0.12	0.17	0.17	0.19	0.24	0.24
Volume/Cap:	0.43	0.30	0.13	0.13	0.43	0.12	0.48	0.43	0.43	0.43	0.42	0.42
Uniform Del:	39.2	20.8	19.6	30.7	16.2	13.8	35.0	31.4	31.4	30.4	27.0	27.0
IncremntDel:	3.3	0.1	0.1	0.1	0.2	0.1	1.7	0.5	0.5	0.9	0.3	0.3
InitQueuDel:	0.0	0.0	0.0	0.0	0.0	0.0	0.0	0.0	0.0	0.0	0.0	0.0
Delay Adj:	1.00	1.00	1.00	1.00	1.00	1.00	1.00	1.00	1.00	1.00	1.00	1.00
Delay/Veh:	42.5	20.9	19.7	30.8	16.4	13.9	36.7	31.9	31.9	31.3	27.4	27.4
User DelAdj:	1.00	1.00	1.00	1.00	1.00	1.00	1.00	1.00	1.00	1.00	1.00	1.00
AdjDel/Veh:	42.5	20.9	19.7	30.8	16.4	13.9	36.7	31.9	31.9	31.3	27.4	27.4
LOS by Move:	D	C	B	C	B	B	D	C	C	C	C	C
HCM2kAvgQ:	2	4	1	1	7	1	3	4	4	4	5	5

Note: Queue reported is the number of cars per lane.

Copyright (c) 2008 Dowling Associates, Inc. Licensed to TJKM, PLEASANTON, CA

Level Of Service Computation Report
2000 HCM Operations (Base Volume Alternative)
Existing PM

Intersection #6: Fairmont Drive/ E 14th Street

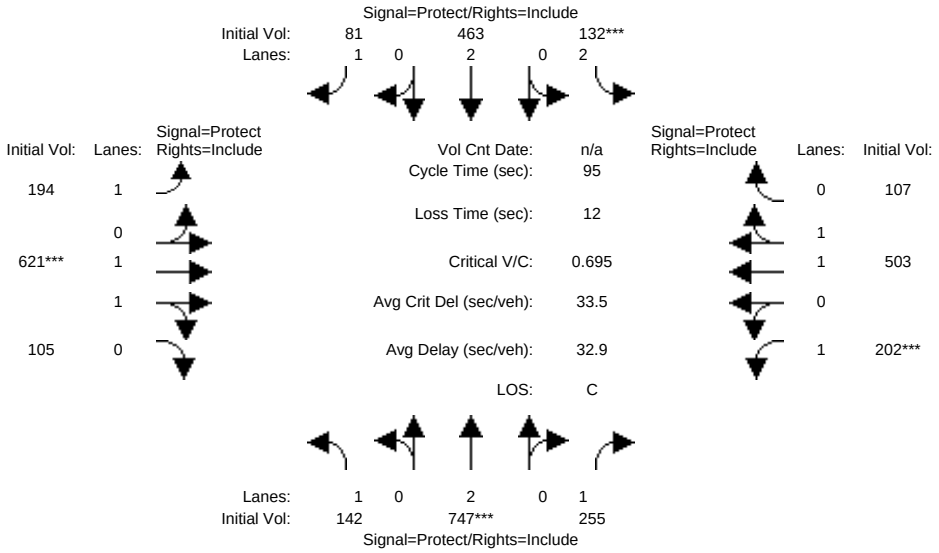

Street Name:	Fairmont Drive						E 14th Street					
Approach:	North Bound			South Bound			East Bound			West Bound		
Movement:	L -	T -	R	L -	T -	R	L -	T -	R	L -	T -	R
Min. Green:	4	4	4	4	4	4	4	10	10	4	10	10
Y+R:	3.7	4.6	4.6	3.7	4.6	4.6	3.7	4.6	4.6	3.7	4.6	4.6
Volume Module:												
Base Vol:	142	747	255	132	463	81	194	621	105	202	503	107
Growth Adj:	1.00	1.00	1.00	1.00	1.00	1.00	1.00	1.00	1.00	1.00	1.00	1.00
Initial Bse:	142	747	255	132	463	81	194	621	105	202	503	107
User Adj:	1.00	1.00	1.00	1.00	1.00	1.00	1.00	1.00	1.00	1.00	1.00	1.00
PHF Adj:	0.96	0.96	0.96	0.88	0.88	0.88	0.91	0.91	0.91	0.91	0.91	0.91
PHF Volume:	148	778	266	150	526	92	213	682	115	222	553	118
Reduct Vol:	0	0	0	0	0	0	0	0	0	0	0	0
Reduced Vol:	148	778	266	150	526	92	213	682	115	222	553	118
PCE Adj:	1.00	1.00	1.00	1.00	1.00	1.00	1.00	1.00	1.00	1.00	1.00	1.00
MLF Adj:	1.00	1.00	1.00	1.00	1.00	1.00	1.00	1.00	1.00	1.00	1.00	1.00
FinalVolume:	148	778	266	150	526	92	213	682	115	222	553	118
Saturation Flow Module:												
Sat/Lane:	1900	1900	1900	1900	1900	1900	1900	1900	1900	1900	1900	1900
Adjustment:	0.95	0.95	0.85	0.92	0.95	0.85	0.95	0.93	0.93	0.95	0.93	0.93
Lanes:	1.00	2.00	1.00	2.00	2.00	1.00	1.00	1.71	0.29	1.00	1.65	0.35
Final Sat.:	1805	3610	1615	3502	3610	1615	1805	3020	511	1805	2899	617
Capacity Analysis Module:												
Vol/Sat:	0.08	0.22	0.16	0.04	0.15	0.06	0.12	0.23	0.23	0.12	0.19	0.19
Crit Moves:		****		****				****		****		
Green/Cycle:	0.13	0.31	0.31	0.06	0.24	0.24	0.19	0.33	0.33	0.18	0.31	0.31
Volume/Cap:	0.61	0.70	0.53	0.70	0.61	0.24	0.62	0.70	0.70	0.70	0.62	0.62
Uniform Del:	38.8	28.8	27.1	43.7	32.3	29.3	35.2	28.0	28.0	36.7	27.9	27.9
IncremntDel:	4.6	1.9	1.1	9.5	1.3	0.3	3.3	1.9	1.9	6.5	1.1	1.1
InitQueuDel:	0.0	0.0	0.0	0.0	0.0	0.0	0.0	0.0	0.0	0.0	0.0	0.0
Delay Adj:	1.00	1.00	1.00	1.00	1.00	1.00	1.00	1.00	1.00	1.00	1.00	1.00
Delay/Veh:	43.4	30.7	28.1	53.2	33.6	29.6	38.5	29.8	29.8	43.2	29.0	29.0
User DelAdj:	1.00	1.00	1.00	1.00	1.00	1.00	1.00	1.00	1.00	1.00	1.00	1.00
AdjDel/Veh:	43.4	30.7	28.1	53.2	33.6	29.6	38.5	29.8	29.8	43.2	29.0	29.0
LOS by Move:	D	C	C	D	C	C	D	C	C	D	C	C
HCM2kAvgQ:	5	12	7	4	8	2	7	12	12	7	9	9

Note: Queue reported is the number of cars per lane.

Copyright (c) 2008 Dowling Associates, Inc. Licensed to TJKM, PLEASANTON, CA

Level Of Service Computation Report
2000 HCM Operations (Base Volume Alternative)
Existing AM

Intersection #7: 150th Avenue/ E 14th Street

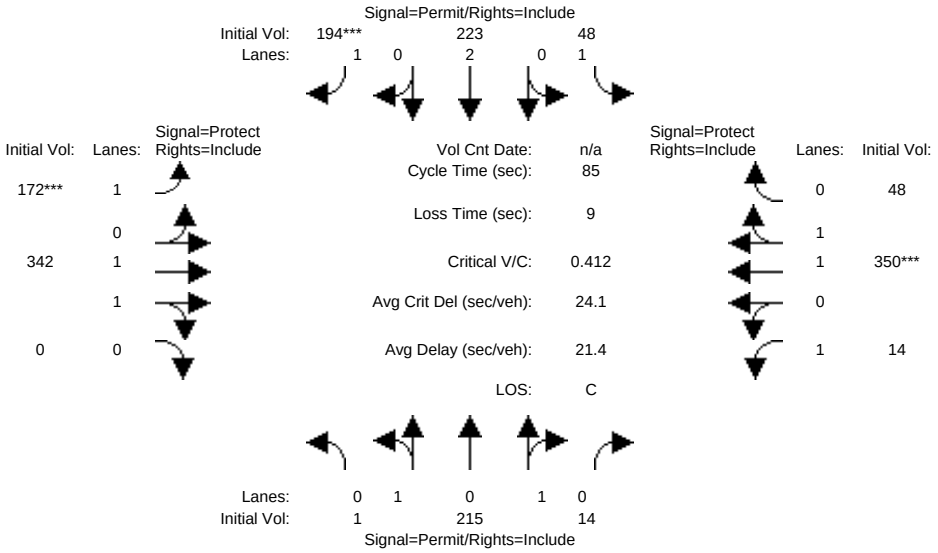

Street Name:	150th Avenue						E 14th Street					
Approach:	North Bound			South Bound			East Bound			West Bound		
Movement:	L -	T -	R	L -	T -	R	L -	T -	R	L -	T -	R
Min. Green:	9	9	9	8	8	8	4	10	10	4	10	10
Y+R:	4.0	4.0	4.0	4.6	4.6	4.6	3.0	4.0	4.0	3.0	4.0	4.0
Volume Module:												
Base Vol:	1	215	14	48	223	194	172	342	0	14	350	48
Growth Adj:	1.00	1.00	1.00	1.00	1.00	1.00	1.00	1.00	1.00	1.00	1.00	1.00
Initial Bse:	1	215	14	48	223	194	172	342	0	14	350	48
User Adj:	1.00	1.00	1.00	1.00	1.00	1.00	1.00	1.00	1.00	1.00	1.00	1.00
PHF Adj:	0.87	0.87	0.87	0.83	0.83	0.83	0.94	0.94	0.94	0.92	0.92	0.92
PHF Volume:	1	247	16	58	269	234	183	364	0	15	380	52
Reduct Vol:	0	0	0	0	0	0	0	0	0	0	0	0
Reduced Vol:	1	247	16	58	269	234	183	364	0	15	380	52
PCE Adj:	1.00	1.00	1.00	1.00	1.00	1.00	1.00	1.00	1.00	1.00	1.00	1.00
MLF Adj:	1.00	1.00	1.00	1.00	1.00	1.00	1.00	1.00	1.00	1.00	1.00	1.00
FinalVolume:	1	247	16	58	269	234	183	364	0	15	380	52
Saturation Flow Module:												
Sat/Lane:	1900	1900	1900	1900	1900	1900	1900	1900	1900	1900	1900	1900
Adjustment:	0.90	0.90	0.90	0.55	0.95	0.85	0.95	0.95	0.95	0.95	0.93	0.93
Lanes:	0.01	1.87	0.12	1.00	2.00	1.00	1.00	2.00	0.00	1.00	1.76	0.24
Final Sat.:	15	3190	208	1047	3610	1615	1805	3610	0	1805	3117	428
Capacity Analysis Module:												
Vol/Sat:	0.08	0.08	0.08	0.06	0.07	0.14	0.10	0.10	0.00	0.01	0.12	0.12
Crit Moves:						****	****				****	
Green/Cycle:	0.35	0.35	0.35	0.35	0.35	0.35	0.25	0.39	0.00	0.16	0.30	0.30
Volume/Cap:	0.22	0.22	0.22	0.16	0.21	0.41	0.41	0.26	0.00	0.05	0.41	0.41
Uniform Del:	19.4	19.4	19.4	18.9	19.3	20.9	26.9	17.7	0.0	30.6	24.0	24.0
IncremntDel:	0.1	0.1	0.1	0.2	0.1	0.5	0.6	0.1	0.0	0.1	0.3	0.3
InitQueuDel:	0.0	0.0	0.0	0.0	0.0	0.0	0.0	0.0	0.0	0.0	0.0	0.0
Delay Adj:	1.00	1.00	1.00	1.00	1.00	1.00	1.00	1.00	0.00	1.00	1.00	1.00
Delay/Veh:	19.5	19.5	19.5	19.1	19.4	21.4	27.5	17.8	0.0	30.7	24.2	24.2
User DelAdj:	1.00	1.00	1.00	1.00	1.00	1.00	1.00	1.00	1.00	1.00	1.00	1.00
AdjDel/Veh:	19.5	19.5	19.5	19.1	19.4	21.4	27.5	17.8	0.0	30.7	24.2	24.2
LOS by Move:	B	B	B	B	B	C	C	B	A	C	C	C
HCM2kAvgQ:	2	2	2	1	3	5	4	3	0	0	5	5

Note: Queue reported is the number of cars per lane.

Copyright (c) 2008 Dowling Associates, Inc. Licensed to TJKM, PLEASANTON, CA

Level Of Service Computation Report
2000 HCM Operations (Base Volume Alternative)
Existing PM

Intersection #7: 150th Avenue/ E 14th Street

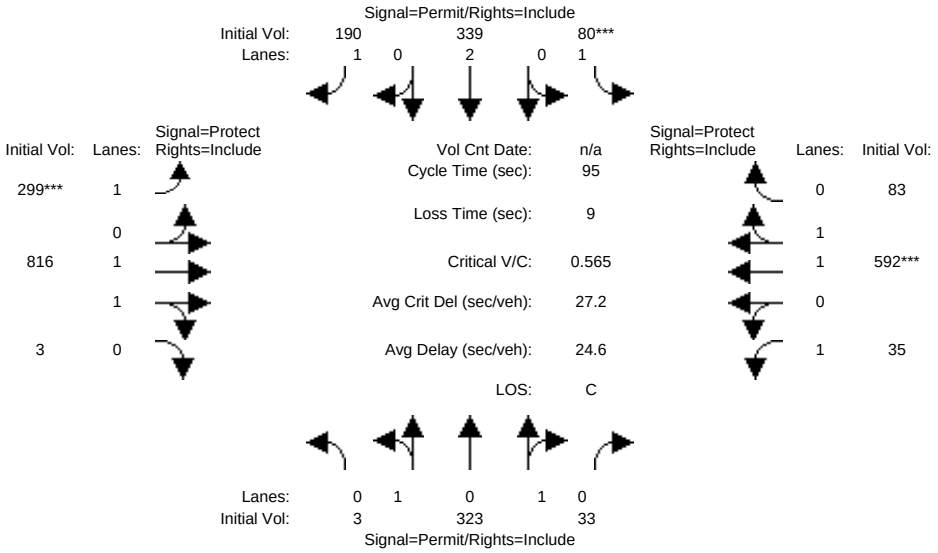

Street Name:	150th Avenue						E 14th Street					
Approach:	North Bound			South Bound			East Bound			West Bound		
Movement:	L -	T -	R	L -	T -	R	L -	T -	R	L -	T -	R
Min. Green:	9	9	9	8	8	8	4	10	10	4	10	10
Y+R:	4.0	4.0	4.0	4.6	4.6	4.6	3.0	4.0	4.0	3.0	4.0	4.0
Volume Module:												
Base Vol:	3	323	33	80	339	190	299	816	3	35	592	83
Growth Adj:	1.00	1.00	1.00	1.00	1.00	1.00	1.00	1.00	1.00	1.00	1.00	1.00
Initial Bse:	3	323	33	80	339	190	299	816	3	35	592	83
User Adj:	1.00	1.00	1.00	1.00	1.00	1.00	1.00	1.00	1.00	1.00	1.00	1.00
PHF Adj:	0.90	0.90	0.90	0.89	0.89	0.89	0.91	0.94	0.91	0.96	0.96	0.96
PHF Volume:	3	359	37	90	381	213	329	868	3	36	617	86
Reduct Vol:	0	0	0	0	0	0	0	0	0	0	0	0
Reduced Vol:	3	359	37	90	381	213	329	868	3	36	617	86
PCE Adj:	1.00	1.00	1.00	1.00	1.00	1.00	1.00	1.00	1.00	1.00	1.00	1.00
MLF Adj:	1.00	1.00	1.00	1.00	1.00	1.00	1.00	1.00	1.00	1.00	1.00	1.00
FinalVolume:	3	359	37	90	381	213	329	868	3	36	617	86
Saturation Flow Module:												
Sat/Lane:	1900	1900	1900	1900	1900	1900	1900	1900	1900	1900	1900	1900
Adjustment:	0.89	0.89	0.89	0.36	0.95	0.85	0.95	0.95	0.95	0.95	0.93	0.93
Lanes:	0.02	1.80	0.18	1.00	2.00	1.00	1.00	1.99	0.01	1.00	1.75	0.25
Final Sat.:	28	3049	311	686	3610	1615	1805	3593	14	1805	3109	436
Capacity Analysis Module:												
Vol/Sat:	0.12	0.12	0.12	0.13	0.11	0.13	0.18	0.24	0.24	0.02	0.20	0.20
Crit Moves:				****			****				****	
Green/Cycle:	0.23	0.23	0.23	0.23	0.23	0.23	0.32	0.57	0.57	0.10	0.35	0.35
Volume/Cap:	0.51	0.51	0.51	0.56	0.45	0.57	0.56	0.42	0.42	0.20	0.56	0.56
Uniform Del:	31.8	31.8	31.8	32.2	31.3	32.3	26.7	11.4	11.4	39.3	25.0	25.0
IncremntDel:	0.5	0.5	0.5	4.6	0.4	2.1	1.3	0.1	0.1	0.6	0.6	0.6
InitQueuDel:	0.0	0.0	0.0	0.0	0.0	0.0	0.0	0.0	0.0	0.0	0.0	0.0
Delay Adj:	1.00	1.00	1.00	1.00	1.00	1.00	1.00	1.00	1.00	1.00	1.00	1.00
Delay/Veh:	32.3	32.3	32.3	36.9	31.7	34.4	28.0	11.5	11.5	39.8	25.6	25.6
User DelAdj:	1.00	1.00	1.00	1.00	1.00	1.00	1.00	1.00	1.00	1.00	1.00	1.00
AdjDel/Veh:	32.3	32.3	32.3	36.9	31.7	34.4	28.0	11.5	11.5	39.8	25.6	25.6
LOS by Move:	C	C	C	D	C	C	C	B	B	D	C	C
HCM2kAvgQ:	5	5	5	3	5	6	8	8	8	1	9	9

Note: Queue reported is the number of cars per lane.

Copyright (c) 2008 Dowling Associates, Inc. Licensed to TJKM, PLEASANTON, CA

Level Of Service Computation Report
2000 HCM Operations (Base Volume Alternative)
Existing AM

Intersection #8: 150th Avenue/ HesperianBlvd

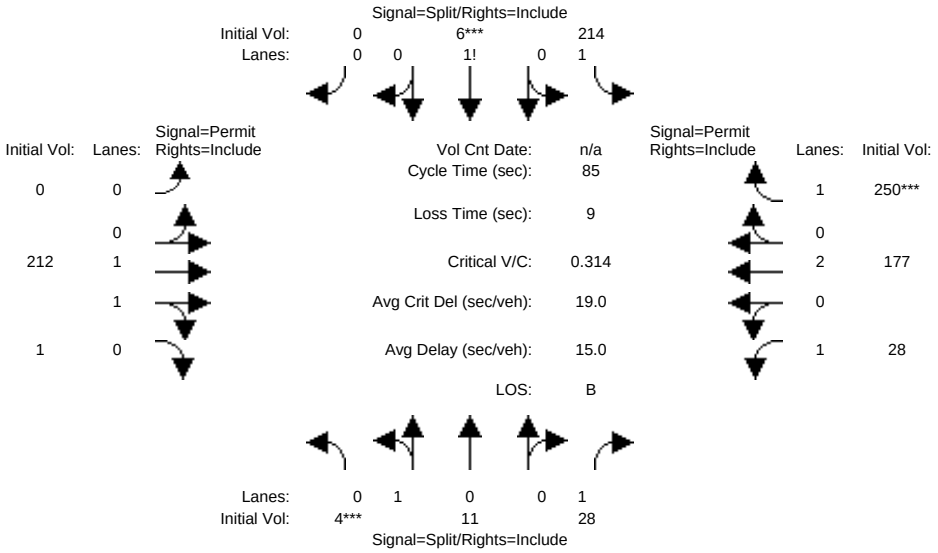

Street Name:	150th Avenue						Hesperian Blvd					
Approach:	North Bound			South Bound			East Bound			West Bound		
Movement:	L -	T -	R	L -	T -	R	L -	T -	R	L -	T -	R
Min. Green:	8	8	8	15	15	15	11	11	11	12	12	12
Y+R:	4.0	4.0	4.0	4.6	4.6	4.6	4.9	4.9	4.9	4.9	4.9	4.9
Volume Module:												
Base Vol:	4	11	28	214	6	0	0	212	1	28	177	250
Growth Adj:	1.00	1.00	1.00	1.00	1.00	1.00	1.00	1.00	1.00	1.00	1.00	1.00
Initial Bse:	4	11	28	214	6	0	0	212	1	28	177	250
User Adj:	1.00	1.00	1.00	1.00	1.00	1.00	1.00	1.00	1.00	1.00	1.00	1.00
PHF Adj:	0.72	0.72	0.72	0.77	0.77	0.77	0.77	0.77	0.77	0.82	0.82	0.82
PHF Volume:	6	15	39	278	8	0	0	275	1	34	216	305
Reduct Vol:	0	0	0	0	0	0	0	0	0	0	0	0
Reduced Vol:	6	15	39	278	8	0	0	275	1	34	216	305
PCE Adj:	1.00	1.00	1.00	1.00	1.00	1.00	1.00	1.00	1.00	1.00	1.00	1.00
MLF Adj:	1.00	1.00	1.00	1.00	1.00	1.00	1.00	1.00	1.00	1.00	1.00	1.00
FinalVolume:	6	15	39	278	8	0	0	275	1	34	216	305
Saturation Flow Module:												
Sat/Lane:	1900	1900	1900	1900	1900	1900	1900	1900	1900	1900	1900	1900
Adjustment:	0.99	0.99	0.85	0.95	0.95	1.00	1.00	0.95	0.95	0.57	0.95	0.85
Lanes:	0.27	0.73	1.00	1.95	0.05	0.00	0.00	1.99	0.01	1.00	2.00	1.00
Final Sat.:	500	1375	1615	3529	96	0	0	3589	17	1087	3610	1615
Capacity Analysis Module:												
Vol/Sat:	0.01	0.01	0.02	0.08	0.08	0.00	0.00	0.08	0.08	0.03	0.06	0.19
Crit Moves:	****				****							****
Green/Cycle:	0.09	0.09	0.09	0.24	0.24	0.00	0.00	0.56	0.56	0.56	0.56	0.56
Volume/Cap:	0.12	0.12	0.26	0.33	0.34	0.00	0.00	0.14	0.14	0.06	0.11	0.34
Uniform Del:	35.3	35.3	35.7	26.6	26.7	0.0	0.0	8.9	8.9	8.5	8.8	10.1
IncremntDel:	0.3	0.3	0.9	0.2	0.2	0.0	0.0	0.0	0.0	0.0	0.0	0.2
InitQueuDel:	0.0	0.0	0.0	0.0	0.0	0.0	0.0	0.0	0.0	0.0	0.0	0.0
Delay Adj:	1.00	1.00	1.00	1.00	1.00	0.00	0.00	1.00	1.00	1.00	1.00	1.00
Delay/Veh:	35.6	35.6	36.6	26.9	26.9	0.0	0.0	8.9	8.9	8.5	8.8	10.4
User DelAdj:	1.00	1.00	1.00	1.00	1.00	1.00	1.00	1.00	1.00	1.00	1.00	1.00
AdjDel/Veh:	35.6	35.6	36.6	26.9	26.9	0.0	0.0	8.9	8.9	8.5	8.8	10.4
LOS by Move:	D	D	D	C	C	A	A	A	A	A	A	B
HCM2kAvgQ:	1	1	1	3	3	0	0	2	2	0	1	4

Note: Queue reported is the number of cars per lane.

Copyright (c) 2008 Dowling Associates, Inc. Licensed to TJKM, PLEASANTON, CA

Level Of Service Computation Report
2000 HCM Operations (Base Volume Alternative)
Existing PM

Intersection #8: 150th Avenue/ HesperianBlvd

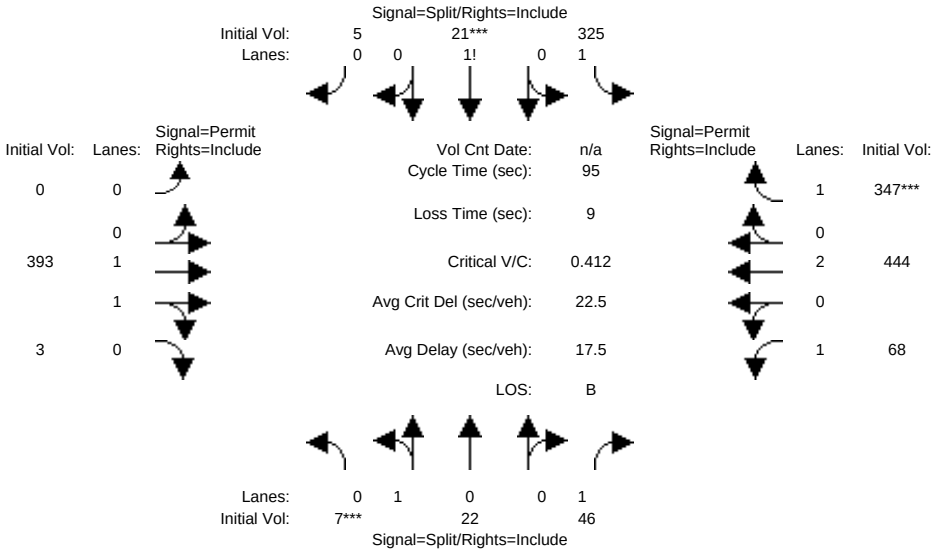

Street Name:	150th Avenue						Hesperian Blvd					
Approach:	North Bound			South Bound			East Bound			West Bound		
Movement:	L -	T -	R	L -	T -	R	L -	T -	R	L -	T -	R
Min. Green:	8	8	8	15	15	15	11	11	11	12	12	12
Y+R:	4.0	4.0	4.0	4.6	4.6	4.6	4.9	4.9	4.9	4.9	4.9	4.9
Volume Module:												
Base Vol:	7	22	46	325	21	5	0	393	3	68	444	347
Growth Adj:	1.00	1.00	1.00	1.00	1.00	1.00	1.00	1.00	1.00	1.00	1.00	1.00
Initial Bse:	7	22	46	325	21	5	0	393	3	68	444	347
User Adj:	1.00	1.00	1.00	1.00	1.00	1.00	1.00	1.00	1.00	1.00	1.00	1.00
PHF Adj:	0.72	0.72	0.72	0.86	0.86	0.86	0.88	0.88	0.88	0.93	0.93	0.93
PHF Volume:	10	31	64	378	24	6	0	447	3	73	477	373
Reduct Vol:	0	0	0	0	0	0	0	0	0	0	0	0
Reduced Vol:	10	31	64	378	24	6	0	447	3	73	477	373
PCE Adj:	1.00	1.00	1.00	1.00	1.00	1.00	1.00	1.00	1.00	1.00	1.00	1.00
MLF Adj:	1.00	1.00	1.00	1.00	1.00	1.00	1.00	1.00	1.00	1.00	1.00	1.00
FinalVolume:	10	31	64	378	24	6	0	447	3	73	477	373
Saturation Flow Module:												
Sat/Lane:	1900	1900	1900	1900	1900	1900	1900	1900	1900	1900	1900	1900
Adjustment:	0.99	0.99	0.85	0.95	0.95	0.95	1.00	0.95	0.95	0.45	0.95	0.85
Lanes:	0.24	0.76	1.00	1.86	0.11	0.03	0.00	1.98	0.02	1.00	2.00	1.00
Final Sat.:	453	1424	1615	3375	202	48	0	3579	27	859	3610	1615
Capacity Analysis Module:												
Vol/Sat:	0.02	0.02	0.04	0.11	0.12	0.12	0.00	0.12	0.12	0.09	0.13	0.23
Crit Moves:	****				****							****
Green/Cycle:	0.10	0.10	0.10	0.28	0.28	0.28	0.00	0.53	0.53	0.53	0.53	0.53
Volume/Cap:	0.22	0.22	0.41	0.40	0.43	0.43	0.00	0.23	0.23	0.16	0.25	0.43
Uniform Del:	39.7	39.7	40.4	27.9	28.2	28.2	0.0	11.9	11.9	11.4	12.0	13.6
IncremntDel:	0.6	0.6	1.8	0.3	0.3	0.3	0.0	0.1	0.1	0.2	0.1	0.4
InitQueuDel:	0.0	0.0	0.0	0.0	0.0	0.0	0.0	0.0	0.0	0.0	0.0	0.0
Delay Adj:	1.00	1.00	1.00	1.00	1.00	1.00	0.00	1.00	1.00	1.00	1.00	1.00
Delay/Veh:	40.3	40.3	42.2	28.1	28.5	28.5	0.0	12.0	12.0	11.6	12.1	13.9
User DelAdj:	1.00	1.00	1.00	1.00	1.00	1.00	1.00	1.00	1.00	1.00	1.00	1.00
AdjDel/Veh:	40.3	40.3	42.2	28.1	28.5	28.5	0.0	12.0	12.0	11.6	12.1	13.9
LOS by Move:	D	D	D	C	C	C	A	B	B	B	B	B
HCM2kAvgQ:	1	1	2	5	5	5	0	4	4	1	4	7

Note: Queue reported is the number of cars per lane.

Copyright (c) 2008 Dowling Associates, Inc. Licensed to TJKM, PLEASANTON, CA

Level Of Service Computation Report
2000 HCM Unsignalized (Base Volume Alternative)
Existing AM

Intersection #9: Fairmont Drive/ North Access Road

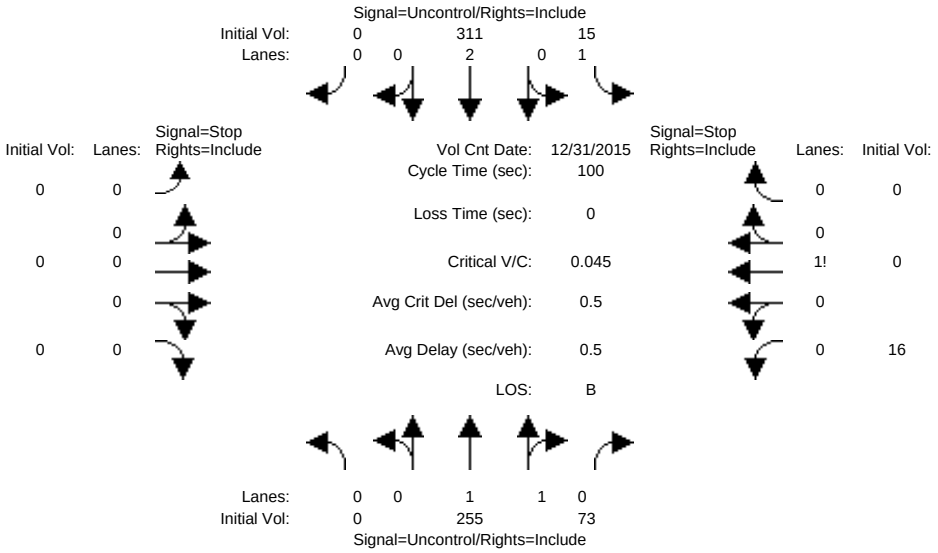


```
Street Name:          Fairmont Drive              North Access Road
Approach:      North Bound      South Bound       East Bound       West Bound
Movement:     L  -  T  -  R    L  -  T  -  R    L  -  T  -  R    L  -  T  -  R
------------|---------------||---------------||---------------||---------------|
Volume Module: >> Count Date: 31 Dec 2015 <<
Base Vol:       0  255    73    15  311     0     0    0     0    16    0     0
Growth Adj:  1.00 1.00  1.00  1.00 1.00  1.00  1.00 1.00  1.00  1.00 1.00  1.00
Initial Bse:    0  255    73    15  311     0     0    0     0    16    0     0
User Adj:    1.00 1.00  1.00  1.00 1.00  1.00  1.00 1.00  1.00  1.00 1.00  1.00
PHF Adj:     0.83 0.83  0.83  0.82 0.82  0.82  1.00 1.00  1.00  0.80 0.80  0.80
PHF Volume:     0  307    88    18  379     0     0    0     0    20    0     0
Reduct Vol:     0    0     0     0    0     0     0    0     0     0    0     0
FinalVolume:    0  307    88    18  379     0     0    0     0    20    0     0
------------|---------------||---------------||---------------||---------------|
Critical Gap Module:
Critical Gp:xxxxx xxxx xxxxx   4.1 xxxx xxxxx xxxxx xxxx xxxxx   6.8 xxxx xxxxx
FollowUpTim:xxxxx xxxx xxxxx   2.2 xxxx xxxxx xxxxx xxxx xxxxx   3.5 xxxx xxxxx
------------|---------------||---------------||---------------||---------------|
Capacity Module:
Cnflict Vol: xxxx xxxx xxxxx   395 xxxx xxxxx  xxxx xxxx xxxxx   577 xxxx xxxxx
Potent Cap.: xxxx xxxx xxxxx  1174 xxxx xxxxx  xxxx xxxx xxxxx   452 xxxx xxxxx
Move Cap.:   xxxx xxxx xxxxx  1174 xxxx xxxxx  xxxx xxxx xxxxx   446 xxxx xxxxx
Volume/Cap:  xxxx xxxx  xxxx  0.02 xxxx  xxxx  xxxx xxxx  xxxx  0.04 xxxx  xxxx
------------|---------------||---------------||---------------||---------------|
Level Of Service Module:
2Way95thQ:   xxxx xxxx xxxxx   0.0 xxxx xxxxx  xxxx xxxx xxxxx   0.1 xxxx xxxxx
Control Del:xxxxx xxxx xxxxx   8.1 xxxx xxxxx xxxxx xxxx xxxxx  13.4 xxxx xxxxx
LOS by Move:    *    *     *     A    *     *     *    *     *     B    *     *
Movement:     LT - LTR - RT    LT - LTR - RT    LT - LTR - RT    LT - LTR - RT
Shared Cap.: xxxx xxxx xxxxx  xxxx xxxx xxxxx  xxxx xxxx xxxxx  xxxx xxxx xxxxx
SharedQueue:xxxxx xxxx xxxxx xxxxx xxxx xxxxx xxxxx xxxx xxxxx xxxxx xxxx xxxxx
Shrd ConDel:xxxxx xxxx xxxxx xxxxx xxxx xxxxx xxxxx xxxx xxxxx xxxxx xxxx xxxxx
Shared LOS:     *    *     *     *    *     *     *    *     *     *    *     *
ApproachDel:    xxxxxx           xxxxxx           xxxxxx             13.4
ApproachLOS:         *                *                *                B
Note: Queue reported is the number of cars per lane.
                    Peak Hour Delay Signal Warrant Report
*******************************************************************************
Intersection #9 Fairmont Drive/ North Access Road
*******************************************************************************
Base Volume Alternative: Peak Hour Warrant NOT Met
------------|---------------||---------------||---------------||---------------|
Approach:      North Bound      South Bound       East Bound       West Bound
```


Copyright (c) 2008 Dowling Associates, Inc. Licensed to TJKM, PLEASANTON, CA

```
Movement:     L  -  T  -  R    L  -  T  -  R    L  -  T  -  R    L  -  T  -  R
------------|---------------||---------------||---------------||---------------|
Control:       Uncontrolled     Uncontrolled      Stop Sign        Stop Sign
Lanes:        0  0  1  1  0    1  0  2  0  0    0  0  0  0  0    1  0  0  0  0
Initial Vol:    0  255    73    15  311     0     0    0     0    16    0     0
ApproachDel:    xxxxxx           xxxxxx           xxxxxx             13.4
------------|---------------||---------------||---------------||---------------|
Approach[westbound][lanes=1][control=Stop Sign]
Signal Warrant Rule #1: [vehicle-hours=0.1]
   FAIL - Vehicle-hours less than 4 for one lane approach.
Signal Warrant Rule #2: [approach volume=16]
   FAIL - Approach volume less than 100 for one lane approach.
Signal Warrant Rule #3: [approach count=3][total volume=670]
   SUCCEED - Total volume greater than or equal to 650 for intersection
             with less than four approaches.
-------------------------------------------------------------------------------
SIGNAL WARRANT DISCLAIMER
This peak hour signal warrant analysis should be considered solely as an
"indicator" of the likelihood of an unsignalized intersection warranting
a traffic signal in the future.  Intersections that exceed this warrant
are probably more likely to meet one or more of the other volume based
signal warrant (such as the 4-hour or 8-hour warrants).

The peak hour warrant analysis in this report is not intended to replace
a rigorous and complete traffic signal warrant analysis by the responsible
jurisdiction.  Consideration of the other signal warrants, which is beyond
the scope of this software, may yield different results.
                Peak Hour Volume Signal Warrant Report [Urban]
*******************************************************************************
Intersection #9 Fairmont Drive/ North Access Road
*******************************************************************************
Base Volume Alternative: Peak Hour Warrant NOT Met
------------|---------------||---------------||---------------||---------------|
Approach:      North Bound      South Bound       East Bound       West Bound
Movement:     L  -  T  -  R    L  -  T  -  R    L  -  T  -  R    L  -  T  -  R
------------|---------------||---------------||---------------||---------------|
Control:       Uncontrolled     Uncontrolled      Stop Sign        Stop Sign
Lanes:        0  0  1  1  0    1  0  2  0  0    0  0  0  0  0    1  0  0  0  0
Initial Vol:    0  255    73    15  311     0     0    0     0    16    0     0
------------|---------------||---------------||---------------||---------------|
Major Street Volume:             654
Minor Approach Volume:           16
Minor Approach Volume Threshold: 431
-------------------------------------------------------------------------------
SIGNAL WARRANT DISCLAIMER
This peak hour signal warrant analysis should be considered solely as an
"indicator" of the likelihood of an unsignalized intersection warranting
a traffic signal in the future.  Intersections that exceed this warrant
are probably more likely to meet one or more of the other volume based
signal warrant (such as the 4-hour or 8-hour warrants).

The peak hour warrant analysis in this report is not intended to replace
a rigorous and complete traffic signal warrant analysis by the responsible
jurisdiction.  Consideration of the other signal warrants, which is beyond
the scope of this software, may yield different results.
```


Copyright (c) 2008 Dowling Associates, Inc.

Level Of Service Computation Report
2000 HCM Unsignalized (Base Volume Alternative)
Existing PM

Intersection #9: Fairmont Drive/ North Access Road

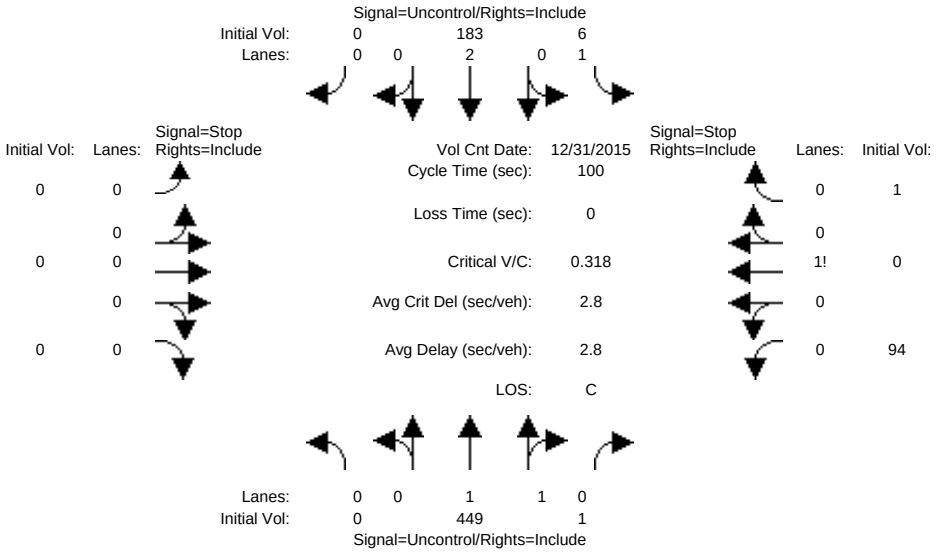


```
Street Name:          Fairmont Drive              North Access Road
Approach:      North Bound      South Bound       East Bound       West Bound
Movement:     L  -  T  -  R    L  -  T  -  R    L  -  T  -  R    L  -  T  -  R
------------|---------------||---------------||---------------||---------------|
Volume Module: >> Count Date: 31 Dec 2015 <<
Base Vol:       0  449     1     6  183     0     0    0     0    94    0     1
Growth Adj:  1.00 1.00  1.00  1.00 1.00  1.00  1.00 1.00  1.00  1.00 1.00  1.00
Initial Bse:    0  449     1     6  183     0     0    0     0    94    0     1
User Adj:    1.00 1.00  1.00  1.00 1.00  1.00  1.00 1.00  1.00  1.00 1.00  1.00
PHF Adj:     0.89 0.89  0.89  0.89 0.89  0.89  1.00 1.00  1.00  0.70 0.70  0.70
PHF Volume:     0  504     1     7  206     0     0    0     0   134    0     1
Reduct Vol:     0    0     0     0    0     0     0    0     0     0    0     0
FinalVolume:    0  504     1     7  206     0     0    0     0   134    0     1
------------|---------------||---------------||---------------||---------------|
Critical Gap Module:
Critical Gp:xxxxx xxxx xxxxx   4.1 xxxx xxxxx xxxxx xxxx xxxxx   6.8  6.5   6.9
FollowUpTim:xxxxx xxxx xxxxx   2.2 xxxx xxxxx xxxxx xxxx xxxxx   3.5  4.0   3.3
------------|---------------||---------------||---------------||---------------|
Capacity Module:
Cnflict Vol: xxxx xxxx xxxxx   506 xxxx xxxxx  xxxx xxxx xxxxx   621  724   253
Potent Cap.: xxxx xxxx xxxxx  1069 xxxx xxxxx  xxxx xxxx xxxxx   424  354   753
Move Cap.:   xxxx xxxx xxxxx  1069 xxxx xxxxx  xxxx xxxx xxxxx   422  352   753
Volume/Cap:  xxxx xxxx  xxxx  0.01 xxxx  xxxx  xxxx xxxx  xxxx  0.32 0.00  0.00
------------|---------------||---------------||---------------||---------------|
Level Of Service Module:
2Way95thQ:   xxxx xxxx xxxxx   0.0 xxxx xxxxx  xxxx xxxx xxxxx  xxxx xxxx xxxxx
Control Del:xxxxx xxxx xxxxx   8.4 xxxx xxxxx xxxxx xxxx xxxxx xxxxx xxxx xxxxx
LOS by Move:    *    *     *     A    *     *     *    *     *     *    *     *
Movement:     LT - LTR - RT    LT - LTR - RT    LT - LTR - RT    LT - LTR - RT
Shared Cap.: xxxx xxxx xxxxx  xxxx xxxx xxxxx  xxxx xxxx xxxxx  xxxx  424 xxxxx
SharedQueue:xxxxx xxxx xxxxx xxxxx xxxx xxxxx xxxxx xxxx xxxxx xxxxx  1.4 xxxxx
Shrd ConDel:xxxxx xxxx xxxxx xxxxx xxxx xxxxx xxxxx xxxx xxxxx xxxxx 17.5 xxxxx
Shared LOS:     *    *     *     *    *     *     *    *     *     *    C     *
ApproachDel:    xxxxxx           xxxxxx           xxxxxx             17.5
ApproachLOS:         *                *                *                C
Note: Queue reported is the number of cars per lane.
                    Peak Hour Delay Signal Warrant Report
*******************************************************************************
Intersection #9 Fairmont Drive/ North Access Road
*******************************************************************************
Base Volume Alternative: Peak Hour Warrant NOT Met
------------|---------------||---------------||---------------||---------------|
Approach:      North Bound      South Bound       East Bound       West Bound
```


Copyright (c) 2008 Dowling Associates, Inc. Licensed to TJKM, PLEASANTON, CA

```
Movement:     L  -  T  -  R    L  -  T  -  R    L  -  T  -  R    L  -  T  -  R
------------|---------------||---------------||---------------||---------------|
Control:       Uncontrolled     Uncontrolled      Stop Sign        Stop Sign
Lanes:        0  0  1  1  0    1  0  2  0  0    0  0  0  0  0    0  0  1! 0  0
Initial Vol:    0  449     1     6  183     0     0    0     0    94    0     1
ApproachDel:    xxxxxx           xxxxxx           xxxxxx             17.5
------------|---------------||---------------||---------------||---------------|
Approach[westbound][lanes=1][control=Stop Sign]
Signal Warrant Rule #1: [vehicle-hours=0.5]
   FAIL - Vehicle-hours less than 4 for one lane approach.
Signal Warrant Rule #2: [approach volume=95]
   FAIL - Approach volume less than 100 for one lane approach.
Signal Warrant Rule #3: [approach count=3][total volume=734]
   SUCCEED - Total volume greater than or equal to 650 for intersection
             with less than four approaches.
-------------------------------------------------------------------------------
SIGNAL WARRANT DISCLAIMER
This peak hour signal warrant analysis should be considered solely as an
"indicator" of the likelihood of an unsignalized intersection warranting
a traffic signal in the future.  Intersections that exceed this warrant
are probably more likely to meet one or more of the other volume based
signal warrant (such as the 4-hour or 8-hour warrants).

The peak hour warrant analysis in this report is not intended to replace
a rigorous and complete traffic signal warrant analysis by the responsible
jurisdiction.  Consideration of the other signal warrants, which is beyond
the scope of this software, may yield different results.
                Peak Hour Volume Signal Warrant Report [Urban]
*******************************************************************************
Intersection #9 Fairmont Drive/ North Access Road
*******************************************************************************
Base Volume Alternative: Peak Hour Warrant NOT Met
------------|---------------||---------------||---------------||---------------|
Approach:      North Bound      South Bound       East Bound       West Bound
Movement:     L  -  T  -  R    L  -  T  -  R    L  -  T  -  R    L  -  T  -  R
------------|---------------||---------------||---------------||---------------|
Control:       Uncontrolled     Uncontrolled      Stop Sign        Stop Sign
Lanes:        0  0  1  1  0    1  0  2  0  0    0  0  0  0  0    0  0  1! 0  0
Initial Vol:    0  449     1     6  183     0     0    0     0    94    0     1
------------|---------------||---------------||---------------||---------------|
Major Street Volume:             639
Minor Approach Volume:           95
Minor Approach Volume Threshold: 439
-------------------------------------------------------------------------------
SIGNAL WARRANT DISCLAIMER
This peak hour signal warrant analysis should be considered solely as an
"indicator" of the likelihood of an unsignalized intersection warranting
a traffic signal in the future.  Intersections that exceed this warrant
are probably more likely to meet one or more of the other volume based
signal warrant (such as the 4-hour or 8-hour warrants).

The peak hour warrant analysis in this report is not intended to replace
a rigorous and complete traffic signal warrant analysis by the responsible
jurisdiction.  Consideration of the other signal warrants, which is beyond
the scope of this software, may yield different results.
```


Copyright (c) 2008 Dowling Associates, Inc.
Licensed to TJKM, PLEASANTON, CA

Appendix F-4 – Level of Service Worksheets: Existing plus Project Conditions

Level Of Service Computation Report
2000 HCM Operations (Future Volume Alternative)
Existing plus Project AM

Intersection #1: I-580 EB Off Ramp/ 150th/ Freedom

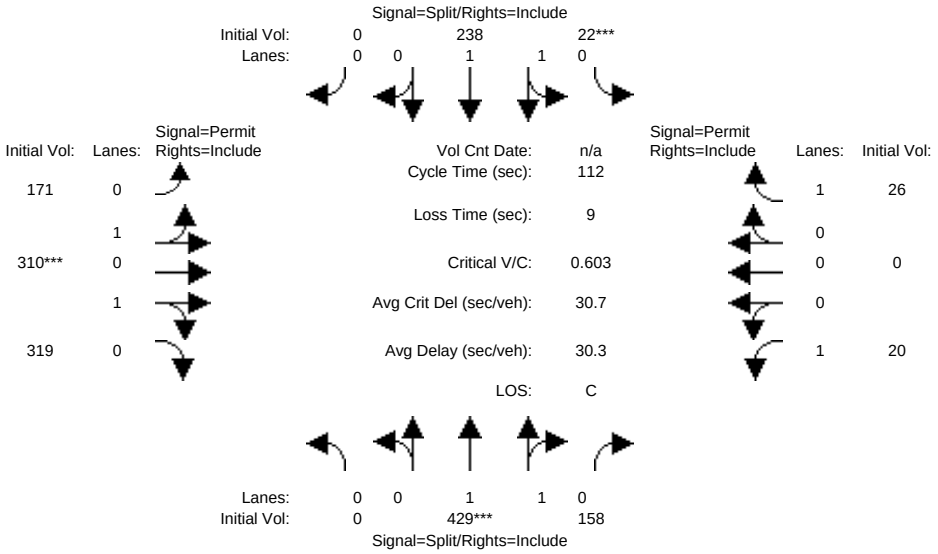

Street Name:	150th Avenue/ Freedom Avenue						I-580 EB Off Ramp					
Approach:	North Bound			South Bound			East Bound			West Bound		
Movement:	L -	T -	R	L -	T -	R	L -	T -	R	L -	T -	R
Min. Green:	6	6	6	8	8	8	4	4	4	4	4	4
Y+R:	4.0	4.0	4.0	4.0	4.0	4.0	3.5	3.5	3.5	3.0	3.0	3.0
Volume Module:												
Base Vol:	0	429	158	22	238	0	157	310	319	20	0	26
Growth Adj:	1.00	1.00	1.00	1.00	1.00	1.00	1.00	1.00	1.00	1.00	1.00	1.00
Initial Bse:	0	429	158	22	238	0	157	310	319	20	0	26
Added Vol:	0	0	0	0	0	0	14	0	0	0	0	0
PasserByVol:	0	0	0	0	0	0	0	0	0	0	0	0
Initial Fut:	0	429	158	22	238	0	171	310	319	20	0	26
User Adj:	1.00	1.00	1.00	1.00	1.00	1.00	1.00	1.00	1.00	1.00	1.00	1.00
PHF Adj:	0.92	0.92	0.92	0.87	0.87	0.87	0.94	0.94	0.94	0.82	0.82	0.82
PHF Volume:	0	466	172	25	274	0	182	330	339	24	0	32
Reduct Vol:	0	0	0	0	0	0	0	0	0	0	0	0
Reduced Vol:	0	466	172	25	274	0	182	330	339	24	0	32
PCE Adj:	1.00	1.00	1.00	1.00	1.00	1.00	1.00	1.00	1.00	1.00	1.00	1.00
MLF Adj:	1.00	1.00	1.00	1.00	1.00	1.00	1.00	1.00	1.00	1.00	1.00	1.00
FinalVolume:	0	466	172	25	274	0	182	330	339	24	0	32
Saturation Flow Module:												
Sat/Lane:	1900	1900	1900	1900	1900	1900	1900	1900	1900	1900	1900	1900
Adjustment:	1.00	0.91	0.91	0.95	0.95	1.00	0.78	0.78	0.78	0.24	1.00	0.85
Lanes:	0.00	1.46	0.54	0.17	1.83	0.00	0.43	0.77	0.80	1.00	0.00	1.00
Final Sat.:	0	2533	933	304	3291	0	634	1149	1183	464	0	1615
Capacity Analysis Module:												
Vol/Sat:	0.00	0.18	0.18	0.08	0.08	0.00	0.29	0.29	0.29	0.05	0.00	0.02
Crit Moves:		****		****				****				
Green/Cycle:	0.00	0.31	0.31	0.14	0.14	0.00	0.48	0.48	0.48	0.48	0.00	0.48
Volume/Cap:	0.00	0.60	0.60	0.60	0.60	0.00	0.60	0.60	0.60	0.11	0.00	0.04
Uniform Del:	0.0	33.1	33.1	45.4	45.4	0.0	21.5	21.5	21.5	16.2	0.0	15.7
IncremntDel:	0.0	1.0	1.0	2.1	2.1	0.0	0.7	0.7	0.7	0.2	0.0	0.0
InitQueuDel:	0.0	0.0	0.0	0.0	0.0	0.0	0.0	0.0	0.0	0.0	0.0	0.0
Delay Adj:	0.00	1.00	1.00	1.00	1.00	0.00	1.00	1.00	1.00	1.00	0.00	1.00
Delay/Veh:	0.0	34.1	34.1	47.5	47.5	0.0	22.3	22.3	22.3	16.4	0.0	15.7
User DelAdj:	1.00	1.00	1.00	1.00	1.00	1.00	1.00	1.00	1.00	1.00	1.00	1.00
AdjDel/Veh:	0.0	34.1	34.1	47.5	47.5	0.0	22.3	22.3	22.3	16.4	0.0	15.7
LOS by Move:	A	C	C	D	D	A	C	C	C	B	A	B
HCM2kAvgQ:	0	10	10	5	5	0	12	12	12	1	0	1

Note: Queue reported is the number of cars per lane.

Copyright (c) 2008 Dowling Associates, Inc. Licensed to TJKM, PLEASANTON, CA

Level Of Service Computation Report
2000 HCM Operations (Future Volume Alternative)
Existing plus Project PM

Intersection #1: I-580 EB Off Ramp/ 150th/ Freedom

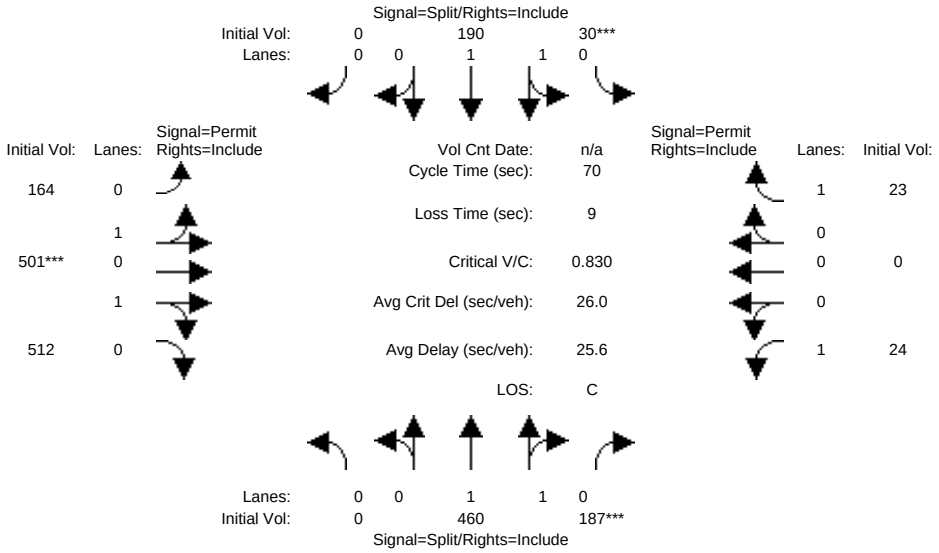

Street Name:	150th Avenue/ Freedom Avenue						I-580 EB Off Ramp					
Approach:	North Bound			South Bound			East Bound			West Bound		
Movement:	L -	T -	R	L -	T -	R	L -	T -	R	L -	T -	R
Min. Green:	6	6	6	8	8	8	4	4	4	4	4	4
Y+R:	4.0	4.0	4.0	4.0	4.0	4.0	3.0	3.0	3.0	3.5	3.5	3.5
Volume Module:												
Base Vol:	0	460	187	30	190	0	159	501	512	24	0	23
Growth Adj:	1.00	1.00	1.00	1.00	1.00	1.00	1.00	1.00	1.00	1.00	1.00	1.00
Initial Bse:	0	460	187	30	190	0	159	501	512	24	0	23
Added Vol:	0	0	0	0	0	0	5	0	0	0	0	0
PasserByVol:	0	0	0	0	0	0	0	0	0	0	0	0
Initial Fut:	0	460	187	30	190	0	164	501	512	24	0	23
User Adj:	1.00	1.00	1.00	1.00	1.00	1.00	1.00	1.00	1.00	1.00	1.00	1.00
PHF Adj:	0.86	0.86	0.86	0.86	0.86	0.86	0.89	0.89	0.89	0.84	0.84	0.84
PHF Volume:	0	535	217	35	221	0	184	563	575	29	0	27
Reduct Vol:	0	0	0	0	0	0	0	0	0	0	0	0
Reduced Vol:	0	535	217	35	221	0	184	563	575	29	0	27
PCE Adj:	1.00	1.00	1.00	1.00	1.00	1.00	1.00	1.00	1.00	1.00	1.00	1.00
MLF Adj:	1.00	1.00	1.00	1.00	1.00	1.00	1.00	1.00	1.00	1.00	1.00	1.00
FinalVolume:	0	535	217	35	221	0	184	563	575	29	0	27
Saturation Flow Module:												
Sat/Lane:	1900	1900	1900	1900	1900	1900	1900	1900	1900	1900	1900	1900
Adjustment:	1.00	0.91	0.91	0.94	0.94	1.00	0.80	0.80	0.80	0.11	1.00	0.85
Lanes:	0.00	1.42	0.58	0.27	1.73	0.00	0.28	0.85	0.87	1.00	0.00	1.00
Final Sat.:	0	2456	999	489	3096	0	425	1297	1326	217	0	1615
Capacity Analysis Module:												
Vol/Sat:	0.00	0.22	0.22	0.07	0.07	0.00	0.43	0.43	0.43	0.13	0.00	0.02
Crit Moves:			****	****				****				
Green/Cycle:	0.00	0.25	0.25	0.11	0.11	0.00	0.50	0.50	0.50	0.50	0.00	0.50
Volume/Cap:	0.00	0.86	0.86	0.62	0.62	0.00	0.86	0.86	0.86	0.26	0.00	0.03
Uniform Del:	0.0	25.0	25.0	29.6	29.6	0.0	15.2	15.2	15.2	9.9	0.0	8.8
IncremntDel:	0.0	8.7	8.7	3.0	3.0	0.0	5.2	5.2	5.2	1.3	0.0	0.0
InitQueuDel:	0.0	0.0	0.0	0.0	0.0	0.0	0.0	0.0	0.0	0.0	0.0	0.0
Delay Adj:	0.00	1.00	1.00	1.00	1.00	0.00	1.00	1.00	1.00	1.00	0.00	1.00
Delay/Veh:	0.0	33.6	33.6	32.6	32.6	0.0	20.4	20.4	20.4	11.2	0.0	8.8
User DelAdj:	1.00	1.00	1.00	1.00	1.00	1.00	1.00	1.00	1.00	1.00	1.00	1.00
AdjDel/Veh:	0.0	33.6	33.6	32.6	32.6	0.0	20.4	20.4	20.4	11.2	0.0	8.8
LOS by Move:	A	C	C	C	C	A	C	C	C	B	A	A
HCM2kAvgQ:	0	11	11	3	3	0	17	17	17	1	0	0

Copyright (c) 2008 Dowling Associates, Inc. Licensed to TJKM, PLEASANTON, CA

Level Of Service Computation Report
2000 HCM Operations (Future Volume Alternative)
Existing plus Project AM

Intersection #2: 150th Ave/ FootHill Blvd/I-580 WB On Ramp

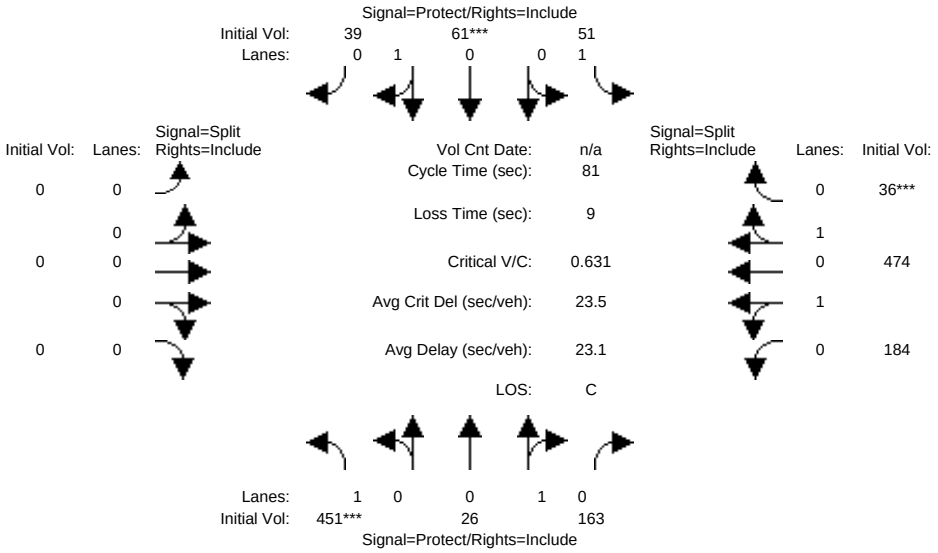

Street Name:	150th Ave/ FootHill Blvd						I-580 WB On Ramp					
Approach:	North Bound			South Bound			East Bound			West Bound		
Movement:	L -	T -	R	L -	T -	R	L -	T -	R	L -	T -	R
Min. Green:	4	6	6	5	5	5	4	4	4	4	4	4
Y+R:	3.0	4.0	4.0	3.0	4.0	4.0	0.0	0.0	0.0	3.5	3.5	3.5
Volume Module:												
Base Vol:	451	26	149	51	61	39	0	0	0	184	470	36
Growth Adj:	1.00	1.00	1.00	1.00	1.00	1.00	1.00	1.00	1.00	1.00	1.00	1.00
Initial Bse:	451	26	149	51	61	39	0	0	0	184	470	36
Added Vol:	0	0	14	0	0	0	0	0	0	0	4	0
PasserByVol:	0	0	0	0	0	0	0	0	0	0	0	0
Initial Fut:	451	26	163	51	61	39	0	0	0	184	474	36
User Adj:	1.00	1.00	1.00	1.00	1.00	1.00	1.00	1.00	1.00	1.00	1.00	1.00
PHF Adj:	0.90	0.90	0.90	0.82	0.82	0.82	1.00	1.00	1.00	0.94	0.94	0.94
PHF Volume:	501	29	181	62	74	48	0	0	0	196	504	38
Reduct Vol:	0	0	0	0	0	0	0	0	0	0	0	0
Reduced Vol:	501	29	181	62	74	48	0	0	0	196	504	38
PCE Adj:	1.00	1.00	1.00	1.00	1.00	1.00	1.00	1.00	1.00	1.00	1.00	1.00
MLF Adj:	1.00	1.00	1.00	1.00	1.00	1.00	1.00	1.00	1.00	1.00	1.00	1.00
FinalVolume:	501	29	181	62	74	48	0	0	0	196	504	38
Saturation Flow Module:												
Sat/Lane:	1900	1900	1900	1900	1900	1900	1900	1900	1900	1900	1900	1900
Adjustment:	0.95	0.87	0.87	0.95	0.94	0.94	1.00	1.00	1.00	0.90	0.90	0.90
Lanes:	1.00	0.14	0.86	1.00	0.61	0.39	0.00	0.00	0.00	0.53	1.37	0.10
Final Sat.:	1805	228	1427	1805	1092	698	0	0	0	911	2348	178
Capacity Analysis Module:												
Vol/Sat:	0.28	0.13	0.13	0.03	0.07	0.07	0.00	0.00	0.00	0.21	0.21	0.21
Crit Moves:	****				****							****
Green/Cycle:	0.44	0.37	0.37	0.18	0.11	0.11	0.00	0.00	0.00	0.34	0.34	0.34
Volume/Cap:	0.63	0.34	0.34	0.19	0.63	0.63	0.00	0.00	0.00	0.63	0.63	0.63
Uniform Del:	17.6	18.5	18.5	28.2	34.6	34.6	0.0	0.0	0.0	22.4	22.4	22.4
IncremntDel:	1.6	0.3	0.3	0.3	6.6	6.6	0.0	0.0	0.0	1.1	1.1	1.1
InitQueuDel:	0.0	0.0	0.0	0.0	0.0	0.0	0.0	0.0	0.0	0.0	0.0	0.0
Delay Adj:	1.00	1.00	1.00	1.00	1.00	1.00	0.00	0.00	0.00	1.00	1.00	1.00
Delay/Veh:	19.2	18.8	18.8	28.5	41.1	41.1	0.0	0.0	0.0	23.5	23.5	23.5
User DelAdj:	1.00	1.00	1.00	1.00	1.00	1.00	1.00	1.00	1.00	1.00	1.00	1.00
AdjDel/Veh:	19.2	18.8	18.8	28.5	41.1	41.1	0.0	0.0	0.0	23.5	23.5	23.5
LOS by Move:	B	B	B	C	D	D	A	A	A	C	C	C
HCM2kAvgQ:	9	4	4	1	4	4	0	0	0	8	8	8

Copyright (c) 2008 Dowling Associates, Inc. Licensed to TJKM, PLEASANTON, CA

Level Of Service Computation Report
2000 HCM Operations (Future Volume Alternative)
Existing plus Project PM

Intersection #2: 150th Ave/ FootHill Blvd/I-580 WB On Ramp

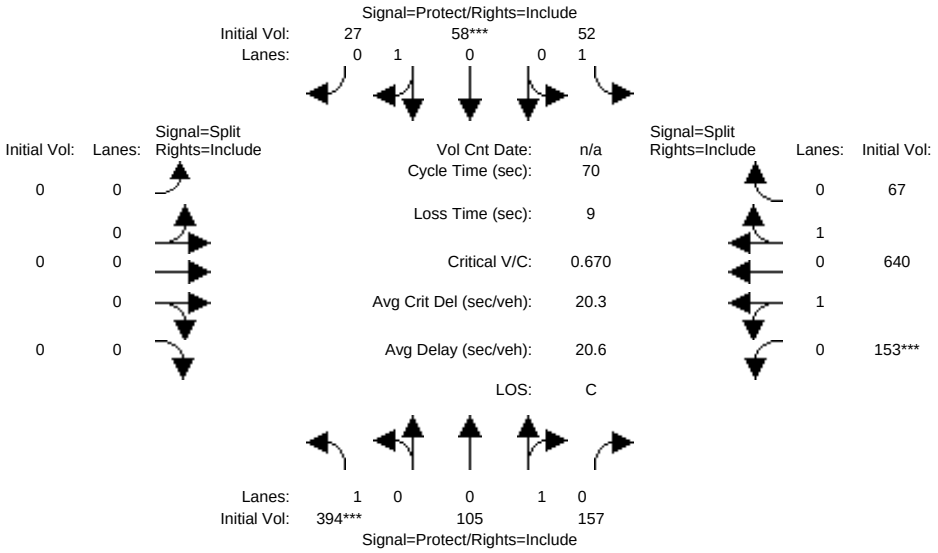

Street Name:	150th Ave/ FootHill Blvd						I-580 WB On Ramp					
Approach:	North Bound			South Bound			East Bound			West Bound		
Movement:	L -	T -	R	L -	T -	R	L -	T -	R	L -	T -	R
Min. Green:	4	6	6	5	5	5	4	4	4	4	4	4
Y+R:	3.0	4.0	4.0	3.0	4.0	4.0	0.0	0.0	0.0	3.5	3.5	3.5
Volume Module:												
Base Vol:	394	105	152	52	58	27	0	0	0	153	630	67
Growth Adj:	1.00	1.00	1.00	1.00	1.00	1.00	1.00	1.00	1.00	1.00	1.00	1.00
Initial Bse:	394	105	152	52	58	27	0	0	0	153	630	67
Added Vol:	0	0	5	0	0	0	0	0	0	0	10	0
PasserByVol:	0	0	0	0	0	0	0	0	0	0	0	0
Initial Fut:	394	105	157	52	58	27	0	0	0	153	640	67
User Adj:	1.00	1.00	1.00	1.00	1.00	1.00	1.00	1.00	1.00	1.00	1.00	1.00
PHF Adj:	0.87	0.87	0.87	0.86	0.86	0.86	1.00	1.00	1.00	0.89	0.89	0.89
PHF Volume:	453	121	180	60	67	31	0	0	0	172	719	75
Reduct Vol:	0	0	0	0	0	0	0	0	0	0	0	0
Reduced Vol:	453	121	180	60	67	31	0	0	0	172	719	75
PCE Adj:	1.00	1.00	1.00	1.00	1.00	1.00	1.00	1.00	1.00	1.00	1.00	1.00
MLF Adj:	1.00	1.00	1.00	1.00	1.00	1.00	1.00	1.00	1.00	1.00	1.00	1.00
FinalVolume:	453	121	180	60	67	31	0	0	0	172	719	75
Saturation Flow Module:												
Sat/Lane:	1900	1900	1900	1900	1900	1900	1900	1900	1900	1900	1900	1900
Adjustment:	0.95	0.91	0.91	0.95	0.95	0.95	1.00	1.00	1.00	0.91	0.91	0.91
Lanes:	1.00	0.40	0.60	1.00	0.68	0.32	0.00	0.00	0.00	0.35	1.49	0.16
Final Sat.:	1805	693	1036	1805	1234	575	0	0	0	617	2583	270
Capacity Analysis Module:												
Vol/Sat:	0.25	0.17	0.17	0.03	0.05	0.05	0.00	0.00	0.00	0.28	0.28	0.28
Crit Moves:	****				****					****		
Green/Cycle:	0.37	0.32	0.32	0.13	0.08	0.08	0.00	0.00	0.00	0.42	0.42	0.42
Volume/Cap:	0.67	0.54	0.54	0.25	0.67	0.67	0.00	0.00	0.00	0.67	0.67	0.67
Uniform Del:	18.3	19.4	19.4	27.2	31.2	31.2	0.0	0.0	0.0	16.6	16.6	16.6
IncremntDel:	2.6	1.1	1.1	0.6	11.3	11.3	0.0	0.0	0.0	1.2	1.2	1.2
InitQueuDel:	0.0	0.0	0.0	0.0	0.0	0.0	0.0	0.0	0.0	0.0	0.0	0.0
Delay Adj:	1.00	1.00	1.00	1.00	1.00	1.00	0.00	0.00	0.00	1.00	1.00	1.00
Delay/Veh:	20.9	20.5	20.5	27.8	42.6	42.6	0.0	0.0	0.0	17.8	17.8	17.8
User DelAdj:	1.00	1.00	1.00	1.00	1.00	1.00	1.00	1.00	1.00	1.00	1.00	1.00
AdjDel/Veh:	20.9	20.5	20.5	27.8	42.6	42.6	0.0	0.0	0.0	17.8	17.8	17.8
LOS by Move:	C	C	C	C	D	D	A	A	A	B	B	B
HCM2kAvgQ:	8	5	5	1	3	3	0	0	0	9	9	9

Copyright (c) 2008 Dowling Associates, Inc. Licensed to TJKM, PLEASANTON, CA

Level Of Service Computation Report
2000 HCM Operations (Future Volume Alternative)
Existing plus Project AM

Intersection #3: Fairmont Drive/Freedom/ I-580 EB On Ramp

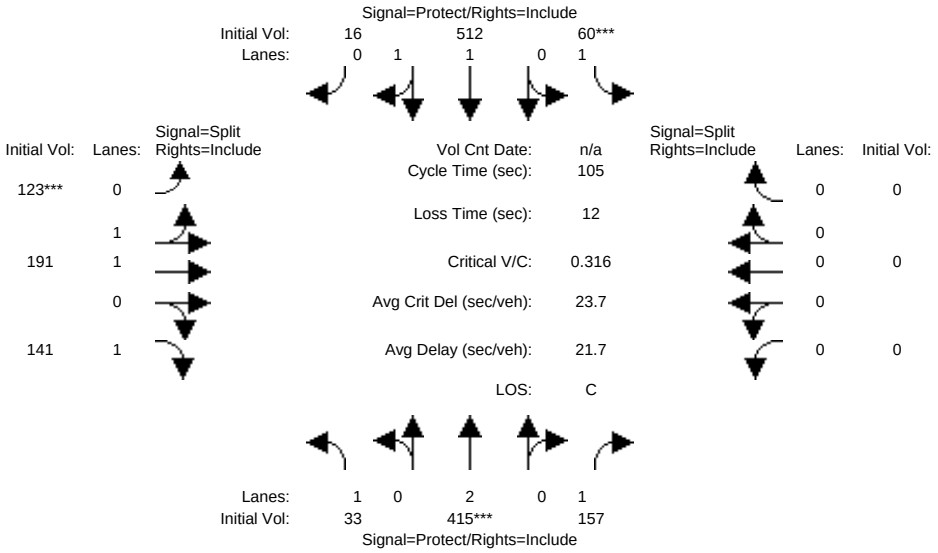

Street Name:	Fairmont Drive						Freedom/ I-580 EB On Ramp					
Approach:	North Bound			South Bound			East Bound			West Bound		
Movement:	L -	T -	R	L -	T -	R	L -	T -	R	L -	T -	R
Min. Green:	2	5	5	4	2	2	2	2	2	2	2	2
Y+R:	3.5	4.1	4.1	3.5	4.4	4.4	4.0	4.0	4.0	4.0	4.0	4.0
Volume Module:												
Base Vol:	33	410	157	57	511	16	123	191	141	0	0	0
Growth Adj:	1.00	1.00	1.00	1.00	1.00	1.00	1.00	1.00	1.00	1.00	1.00	1.00
Initial Bse:	33	410	157	57	511	16	123	191	141	0	0	0
Added Vol:	0	5	0	3	1	0	0	0	0	0	0	0
PasserByVol:	0	0	0	0	0	0	0	0	0	0	0	0
Initial Fut:	33	415	157	60	512	16	123	191	141	0	0	0
User Adj:	1.00	1.00	1.00	1.00	1.00	1.00	1.00	1.00	1.00	1.00	1.00	1.00
PHF Adj:	0.82	0.82	0.82	0.91	0.91	0.91	0.88	0.88	0.88	1.00	1.00	1.00
PHF Volume:	40	506	191	66	563	18	140	217	160	0	0	0
Reduct Vol:	0	0	0	0	0	0	0	0	0	0	0	0
Reduced Vol:	40	506	191	66	563	18	140	217	160	0	0	0
PCE Adj:	1.00	1.00	1.00	1.00	1.00	1.00	1.00	1.00	1.00	1.00	1.00	1.00
MLF Adj:	1.00	1.00	1.00	1.00	1.00	1.00	1.00	1.00	1.00	1.00	1.00	1.00
FinalVolume:	40	506	191	66	563	18	140	217	160	0	0	0
Saturation Flow Module:												
Sat/Lane:	1900	1900	1900	1900	1900	1900	1900	1900	1900	1900	1900	1900
Adjustment:	0.95	0.95	0.85	0.95	0.95	0.95	0.91	0.91	0.85	1.00	1.00	1.00
Lanes:	1.00	2.00	1.00	1.00	1.94	0.06	0.78	1.22	1.00	0.00	0.00	0.00
Final Sat.:	1805	3610	1615	1805	3487	109	1358	2108	1615	0	0	0
Capacity Analysis Module:												
Vol/Sat:	0.02	0.14	0.12	0.04	0.16	0.16	0.10	0.10	0.10	0.00	0.00	0.00
Crit Moves:		****		****			****					
Green/Cycle:	0.07	0.44	0.44	0.12	0.49	0.49	0.33	0.33	0.33	0.00	0.00	0.00
Volume/Cap:	0.33	0.32	0.27	0.32	0.33	0.33	0.32	0.32	0.30	0.00	0.00	0.00
Uniform Del:	46.6	18.9	18.4	42.6	16.2	16.2	26.6	26.6	26.5	0.0	0.0	0.0
IncremntDel:	1.6	0.1	0.2	0.9	0.1	0.1	0.2	0.2	0.3	0.0	0.0	0.0
InitQueuDel:	0.0	0.0	0.0	0.0	0.0	0.0	0.0	0.0	0.0	0.0	0.0	0.0
Delay Adj:	1.00	1.00	1.00	1.00	1.00	1.00	1.00	1.00	1.00	0.00	0.00	0.00
Delay/Veh:	48.2	19.0	18.6	43.5	16.3	16.3	26.7	26.7	26.8	0.0	0.0	0.0
User DelAdj:	1.00	1.00	1.00	1.00	1.00	1.00	1.00	1.00	1.00	1.00	1.00	1.00
AdjDel/Veh:	48.2	19.0	18.6	43.5	16.3	16.3	26.7	26.7	26.8	0.0	0.0	0.0
LOS by Move:	D	B	B	D	B	B	C	C	C	A	A	A
HCM2kAvgQ:	2	5	4	2	6	6	5	5	4	0	0	0

Copyright (c) 2008 Dowling Associates, Inc. Licensed to TJKM, PLEASANTON, CA

Level Of Service Computation Report
2000 HCM Operations (Future Volume Alternative)
Existing plus Project PM

Intersection #3: Fairmont Drive/Freedom/ I-580 EB On Ramp

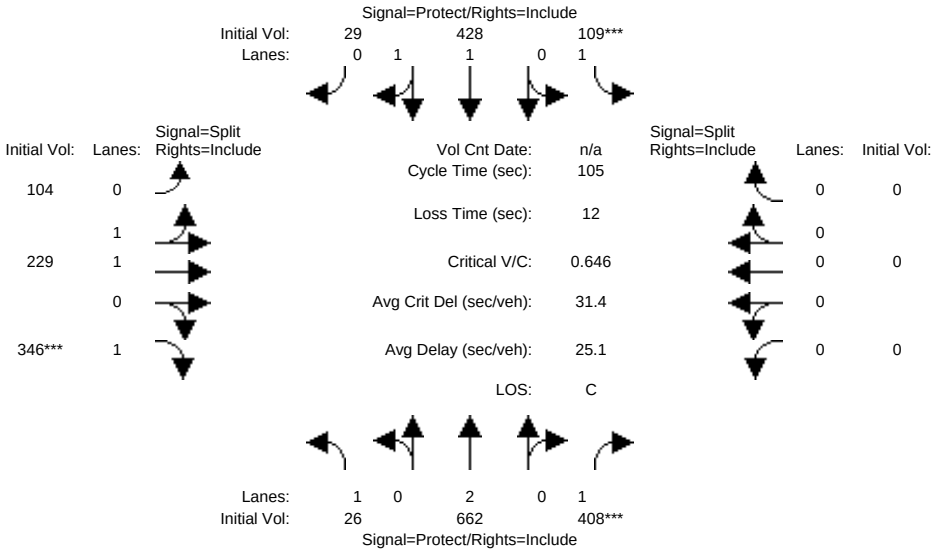

Street Name:	Fairmont Drive						Freedom/ I-580 EB On Ramp					
Approach:	North Bound			South Bound			East Bound			West Bound		
Movement:	L -	T -	R	L -	T -	R	L -	T -	R	L -	T -	R
Min. Green:	2	5	5	4	2	2	2	2	2	2	2	2
Y+R:	3.5	4.1	4.1	3.5	4.4	4.4	4.0	4.0	4.0	4.0	4.0	4.0
Volume Module:												
Base Vol:	26	660	408	102	425	29	104	229	346	0	0	0
Growth Adj:	1.00	1.00	1.00	1.00	1.00	1.00	1.00	1.00	1.00	1.00	1.00	1.00
Initial Bse:	26	660	408	102	425	29	104	229	346	0	0	0
Added Vol:	0	2	0	7	3	0	0	0	0	0	0	0
PasserByVol:	0	0	0	0	0	0	0	0	0	0	0	0
Initial Fut:	26	662	408	109	428	29	104	229	346	0	0	0
User Adj:	1.00	1.00	1.00	1.00	1.00	1.00	1.00	1.00	1.00	1.00	1.00	1.00
PHF Adj:	0.92	0.92	0.92	0.90	0.90	0.90	0.93	0.93	0.93	1.00	1.00	1.00
PHF Volume:	28	720	443	121	476	32	112	246	372	0	0	0
Reduct Vol:	0	0	0	0	0	0	0	0	0	0	0	0
Reduced Vol:	28	720	443	121	476	32	112	246	372	0	0	0
PCE Adj:	1.00	1.00	1.00	1.00	1.00	1.00	1.00	1.00	1.00	1.00	1.00	1.00
MLF Adj:	1.00	1.00	1.00	1.00	1.00	1.00	1.00	1.00	1.00	1.00	1.00	1.00
FinalVolume:	28	720	443	121	476	32	112	246	372	0	0	0
Saturation Flow Module:												
Sat/Lane:	1900	1900	1900	1900	1900	1900	1900	1900	1900	1900	1900	1900
Adjustment:	0.95	0.95	0.85	0.95	0.94	0.94	0.93	0.93	0.85	1.00	1.00	1.00
Lanes:	1.00	2.00	1.00	1.00	1.87	0.13	0.62	1.38	1.00	0.00	0.00	0.00
Final Sat.:	1805	3610	1615	1805	3350	227	1102	2425	1615	0	0	0
Capacity Analysis Module:												
Vol/Sat:	0.02	0.20	0.27	0.07	0.14	0.14	0.10	0.10	0.23	0.00	0.00	0.00
Crit Moves:			****	****					****			
Green/Cycle:	0.06	0.43	0.43	0.10	0.47	0.47	0.36	0.36	0.36	0.00	0.00	0.00
Volume/Cap:	0.25	0.47	0.65	0.65	0.30	0.30	0.28	0.28	0.65	0.00	0.00	0.00
Uniform Del:	46.9	21.7	23.9	45.2	17.4	17.4	24.2	24.2	28.2	0.0	0.0	0.0
IncremntDel:	1.2	0.2	2.1	7.6	0.1	0.1	0.1	0.1	2.5	0.0	0.0	0.0
InitQueuDel:	0.0	0.0	0.0	0.0	0.0	0.0	0.0	0.0	0.0	0.0	0.0	0.0
Delay Adj:	1.00	1.00	1.00	1.00	1.00	1.00	1.00	1.00	1.00	0.00	0.00	0.00
Delay/Veh:	48.0	21.9	26.1	52.8	17.5	17.5	24.3	24.3	30.8	0.0	0.0	0.0
User DelAdj:	1.00	1.00	1.00	1.00	1.00	1.00	1.00	1.00	1.00	1.00	1.00	1.00
AdjDel/Veh:	48.0	21.9	26.1	52.8	17.5	17.5	24.3	24.3	30.8	0.0	0.0	0.0
LOS by Move:	D	C	C	D	B	B	C	C	C	A	A	A
HCM2kAvgQ:	1	9	12	4	5	5	4	4	11	0	0	0

Copyright (c) 2008 Dowling Associates, Inc. Licensed to TJKM, PLEASANTON, CA

Level Of Service Computation Report
2000 HCM Unsignalized (Future Volume Alternative)
Existing plus Project AM

Intersection #4: Foothill Blvd/ I-580 WB Off Ramp

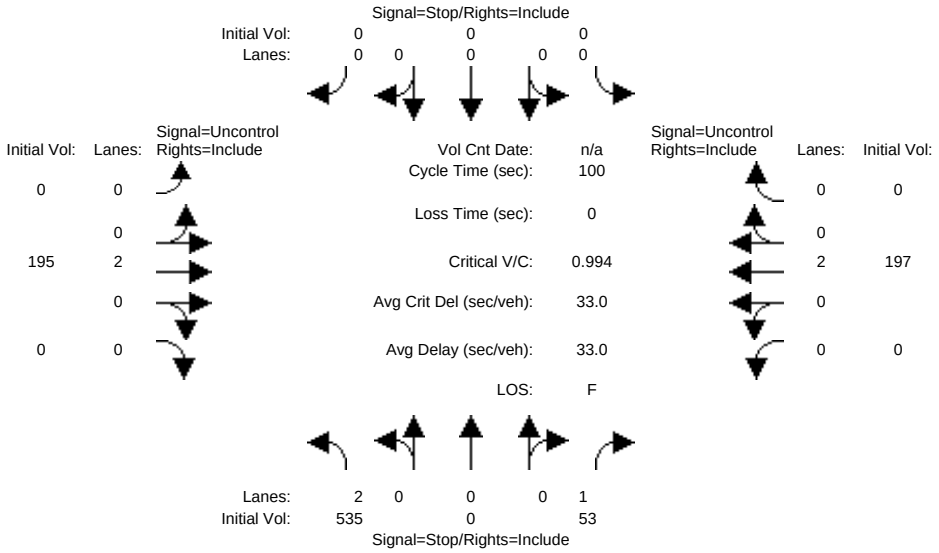


```
Street Name:        I-580 WB Off Ramp                    Foothill Blvd
Approach:      North Bound      South Bound       East Bound       West Bound
Movement:     L  -  T  -  R    L  -  T  -  R    L  -  T  -  R    L  -  T  -  R
------------|---------------||---------------||---------------||---------------|
Volume Module:
Base Vol:     526    0    53     0    0     0     0  195     0     0  197     0
Growth Adj:  1.00 1.00  1.00  1.00 1.00  1.00  1.00 1.00  1.00  1.00 1.00  1.00
Initial Bse:  526    0    53     0    0     0     0  195     0     0  197     0
Added Vol:      9    0     0     0    0     0     0    0     0     0    0     0
PasserByVol:    0    0     0     0    0     0     0    0     0     0    0     0
Initial Fut:  535    0    53     0    0     0     0  195     0     0  197     0
User Adj:    1.00 1.00  1.00  1.00 1.00  1.00  1.00 1.00  1.00  1.00 1.00  1.00
PHF Adj:     0.84 0.84  0.84  1.00 1.00  1.00  0.96 0.96  0.96  0.75 0.75  0.75
PHF Volume:   637    0    63     0    0     0     0  203     0     0  263     0
Reduct Vol:     0    0     0     0    0     0     0    0     0     0    0     0
FinalVolume:  637    0    63     0    0     0     0  203     0     0  263     0
------------|---------------||---------------||---------------||---------------|
Critical Gap Module:
Critical Gp:  6.8 xxxx   6.9 xxxxx xxxx xxxxx xxxxx xxxx xxxxx xxxxx xxxx xxxxx
FollowUpTim:  3.5 xxxx   3.3 xxxxx xxxx xxxxx xxxxx xxxx xxxxx xxxxx xxxx xxxxx
------------|---------------||---------------||---------------||---------------|
Capacity Module:
Cnflict Vol:  334 xxxx   102  xxxx xxxx xxxxx  xxxx xxxx xxxxx  xxxx xxxx xxxxx
Potent Cap.:  641 xxxx   940  xxxx xxxx xxxxx  xxxx xxxx xxxxx  xxxx xxxx xxxxx
Move Cap.:    641 xxxx   940  xxxx xxxx xxxxx  xxxx xxxx xxxxx  xxxx xxxx xxxxx
Volume/Cap:  0.99 xxxx  0.07  xxxx xxxx  xxxx  xxxx xxxx  xxxx  xxxx xxxx  xxxx
------------|---------------||---------------||---------------||---------------|
Level Of Service Module:
2Way95thQ:   10.8 xxxx   0.2  xxxx xxxx xxxxx  xxxx xxxx xxxxx  xxxx xxxx xxxxx
Control Del: 59.5 xxxx   9.1 xxxxx xxxx xxxxx xxxxx xxxx xxxxx xxxxx xxxx xxxxx
LOS by Move:    F    *     A     *    *     *     *    *     *     *    *     *
Movement:     LT - LTR - RT    LT - LTR - RT    LT - LTR - RT    LT - LTR - RT
Shared Cap.: xxxx xxxx xxxxx  xxxx xxxx xxxxx  xxxx xxxx xxxxx  xxxx xxxx xxxxx
SharedQueue:xxxxx xxxx xxxxx xxxxx xxxx xxxxx xxxxx xxxx xxxxx xxxxx xxxx xxxxx
Shrd ConDel:xxxxx xxxx xxxxx xxxxx xxxx xxxxx xxxxx xxxx xxxxx xxxxx xxxx xxxxx
Shared LOS:     *    *     *     *    *     *     *    *     *     *    *     *
ApproachDel:      55.0           xxxxxx           xxxxxx           xxxxxx
ApproachLOS:         F                *                *                *
Note: Queue reported is the number of cars per lane.
                    Peak Hour Delay Signal Warrant Report
*******************************************************************************
Intersection #4 Foothill Blvd/ I-580 WB Off Ramp
*******************************************************************************
```


Copyright (c) 2008 Dowling Associates, Inc. Licensed to TJKM, PLEASANTON, CA

```
Future Volume Alternative: Peak Hour Warrant Met
------------|---------------||---------------||---------------||---------------|
Approach:      North Bound      South Bound       East Bound       West Bound
Movement:     L  -  T  -  R    L  -  T  -  R    L  -  T  -  R    L  -  T  -  R
------------|---------------||---------------||---------------||---------------|
Control:        Stop Sign        Stop Sign       Uncontrolled     Uncontrolled
Lanes:        2  0  0  0  1    0  0  0  0  0    0  0  2  0  0    0  0  2  0  0
Initial Vol:  535    0    53     0    0     0     0  195     0     0  197     0
ApproachDel:      55.0           xxxxxx           xxxxxx           xxxxxx
------------|---------------||---------------||---------------||---------------|
Approach[northbound][lanes=3][control=Stop Sign]
Signal Warrant Rule #1: [vehicle-hours=9.0]
   SUCCEED - Vehicle-hours >= 5 for two or more lane approach.
Signal Warrant Rule #2: [approach volume=588]
   SUCCEED - Approach volume >= 150 for two or more lane approach.
Signal Warrant Rule #3: [approach count=3][total volume=980]
   SUCCEED - Total volume greater than or equal to 650 for intersection
             with less than four approaches.
-------------------------------------------------------------------------------
SIGNAL WARRANT DISCLAIMER
This peak hour signal warrant analysis should be considered solely as an
"indicator" of the likelihood of an unsignalized intersection warranting
a traffic signal in the future.  Intersections that exceed this warrant
are probably more likely to meet one or more of the other volume based
signal warrant (such as the 4-hour or 8-hour warrants).

The peak hour warrant analysis in this report is not intended to replace
a rigorous and complete traffic signal warrant analysis by the responsible
jurisdiction.  Consideration of the other signal warrants, which is beyond
the scope of this software, may yield different results.
                Peak Hour Volume Signal Warrant Report [Urban]
*******************************************************************************
Intersection #4 Foothill Blvd/ I-580 WB Off Ramp
*******************************************************************************
Future Volume Alternative: Peak Hour Warrant NOT Met
------------|---------------||---------------||---------------||---------------|
Approach:      North Bound      South Bound       East Bound       West Bound
Movement:     L  -  T  -  R    L  -  T  -  R    L  -  T  -  R    L  -  T  -  R
------------|---------------||---------------||---------------||---------------|
Control:        Stop Sign        Stop Sign       Uncontrolled     Uncontrolled
Lanes:        2  0  0  0  1    0  0  0  0  0    0  0  2  0  0    0  0  2  0  0
Initial Vol:  535    0    53     0    0     0     0  195     0     0  197     0
------------|---------------||---------------||---------------||---------------|
Major Street Volume:             392
Minor Approach Volume:           588
Minor Approach Volume Threshold: 777
-------------------------------------------------------------------------------
SIGNAL WARRANT DISCLAIMER
This peak hour signal warrant analysis should be considered solely as an
"indicator" of the likelihood of an unsignalized intersection warranting
a traffic signal in the future.  Intersections that exceed this warrant
are probably more likely to meet one or more of the other volume based
signal warrant (such as the 4-hour or 8-hour warrants).

The peak hour warrant analysis in this report is not intended to replace
a rigorous and complete traffic signal warrant analysis by the responsible
jurisdiction.  Consideration of the other signal warrants, which is beyond
the scope of this software, may yield different results.
```


Copyright (c) 2008 Dowling Associates, Inc. Licensed to TJKM, PLEASANTON, CA

Level Of Service Computation Report
2000 HCM Unsignalized (Future Volume Alternative)
Existing plus Project PM

Intersection #4: Foothill Blvd/ I-580 WB Off Ramp

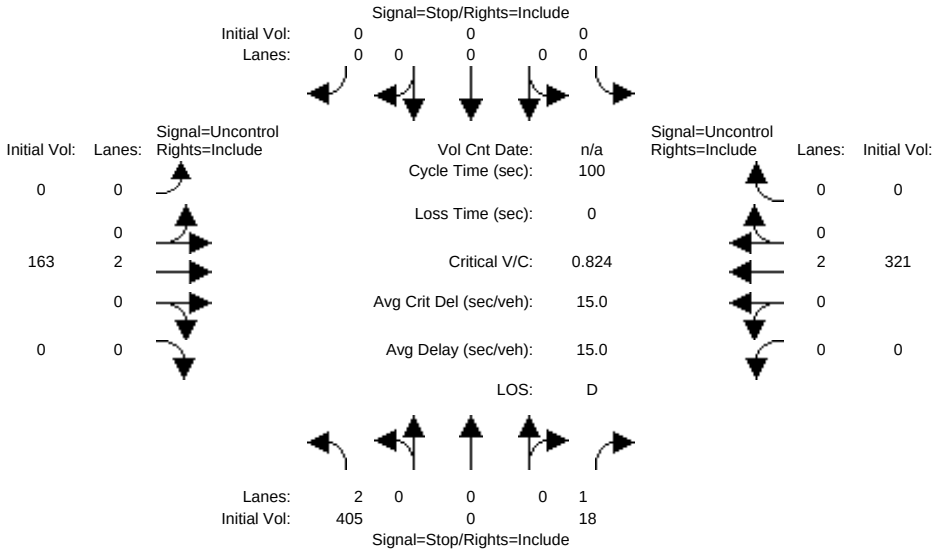


```
Street Name:        I-580 WB Off Ramp                    Foothill Blvd
Approach:      North Bound      South Bound       East Bound       West Bound
Movement:     L  -  T  -  R    L  -  T  -  R    L  -  T  -  R    L  -  T  -  R
------------|---------------||---------------||---------------||---------------|
Volume Module:
Base Vol:     402    0    18     0    0     0     0  163     0     0  321     0
Growth Adj:  1.00 1.00  1.00  1.00 1.00  1.00  1.00 1.00  1.00  1.00 1.00  1.00
Initial Bse:  402    0    18     0    0     0     0  163     0     0  321     0
Added Vol:      3    0     0     0    0     0     0    0     0     0    0     0
PasserByVol:    0    0     0     0    0     0     0    0     0     0    0     0
Initial Fut:  405    0    18     0    0     0     0  163     0     0  321     0
User Adj:    1.00 1.00  1.00  1.00 1.00  1.00  1.00 1.00  1.00  1.00 1.00  1.00
PHF Adj:     0.85 0.85  0.85  1.00 1.00  1.00  0.73 0.73  0.73  0.88 0.88  0.88
PHF Volume:   476    0    21     0    0     0     0  223     0     0  365     0
Reduct Vol:     0    0     0     0    0     0     0    0     0     0    0     0
FinalVolume:  476    0    21     0    0     0     0  223     0     0  365     0
------------|---------------||---------------||---------------||---------------|
Critical Gap Module:
Critical Gp:  6.8 xxxx   6.9 xxxxx xxxx xxxxx xxxxx xxxx xxxxx xxxxx xxxx xxxxx
FollowUpTim:  3.5 xxxx   3.3 xxxxx xxxx xxxxx xxxxx xxxx xxxxx xxxxx xxxx xxxxx
------------|---------------||---------------||---------------||---------------|
Capacity Module:
Cnflict Vol:  406 xxxx   112  xxxx xxxx xxxxx  xxxx xxxx xxxxx  xxxx xxxx xxxxx
Potent Cap.:  578 xxxx   927  xxxx xxxx xxxxx  xxxx xxxx xxxxx  xxxx xxxx xxxxx
Move Cap.:    578 xxxx   927  xxxx xxxx xxxxx  xxxx xxxx xxxxx  xxxx xxxx xxxxx
Volume/Cap:  0.82 xxxx  0.02  xxxx xxxx  xxxx  xxxx xxxx  xxxx  xxxx xxxx  xxxx
------------|---------------||---------------||---------------||---------------|
Level Of Service Module:
2Way95thQ:    6.8 xxxx   0.1  xxxx xxxx xxxxx  xxxx xxxx xxxxx  xxxx xxxx xxxxx
Control Del: 33.8 xxxx   9.0 xxxxx xxxx xxxxx xxxxx xxxx xxxxx xxxxx xxxx xxxxx
LOS by Move:    D    *     A     *    *     *     *    *     *     *    *     *
Movement:     LT - LTR - RT    LT - LTR - RT    LT - LTR - RT    LT - LTR - RT
Shared Cap.: xxxx xxxx xxxxx  xxxx xxxx xxxxx  xxxx xxxx xxxxx  xxxx xxxx xxxxx
SharedQueue:xxxxx xxxx xxxxx xxxxx xxxx xxxxx xxxxx xxxx xxxxx xxxxx xxxx xxxxx
Shrd ConDel:xxxxx xxxx xxxxx xxxxx xxxx xxxxx xxxxx xxxx xxxxx xxxxx xxxx xxxxx
Shared LOS:     *    *     *     *    *     *     *    *     *     *    *     *
ApproachDel:      32.8           xxxxxx           xxxxxx           xxxxxx
ApproachLOS:         D                *                *                *
Note: Queue reported is the number of cars per lane.
                    Peak Hour Delay Signal Warrant Report
*******************************************************************************
Intersection #4 Foothill Blvd/ I-580 WB Off Ramp
*******************************************************************************
```


Copyright (c) 2008 Dowling Associates, Inc. Licensed to TJKM, PLEASANTON, CA

```
Future Volume Alternative: Peak Hour Warrant NOT Met
------------|---------------||---------------||---------------||---------------|
Approach:      North Bound      South Bound       East Bound       West Bound
Movement:     L  -  T  -  R    L  -  T  -  R    L  -  T  -  R    L  -  T  -  R
------------|---------------||---------------||---------------||---------------|
Control:        Stop Sign        Stop Sign       Uncontrolled     Uncontrolled
Lanes:        2  0  0  0  1    0  0  0  0  0    0  0  2  0  0    0  0  2  0  0
Initial Vol:  405    0    18     0    0     0     0  163     0     0  321     0
ApproachDel:      32.8           xxxxxx           xxxxxx           xxxxxx
------------|---------------||---------------||---------------||---------------|
Approach[northbound][lanes=3][control=Stop Sign]
Signal Warrant Rule #1: [vehicle-hours=3.9]
   FAIL - Vehicle-hours less than 5 for two or more lane approach.
Signal Warrant Rule #2: [approach volume=423]
   SUCCEED - Approach volume >= 150 for two or more lane approach.
Signal Warrant Rule #3: [approach count=3][total volume=907]
   SUCCEED - Total volume greater than or equal to 650 for intersection
             with less than four approaches.
-------------------------------------------------------------------------------
SIGNAL WARRANT DISCLAIMER
This peak hour signal warrant analysis should be considered solely as an
"indicator" of the likelihood of an unsignalized intersection warranting
a traffic signal in the future.  Intersections that exceed this warrant
are probably more likely to meet one or more of the other volume based
signal warrant (such as the 4-hour or 8-hour warrants).

The peak hour warrant analysis in this report is not intended to replace
a rigorous and complete traffic signal warrant analysis by the responsible
jurisdiction.  Consideration of the other signal warrants, which is beyond
the scope of this software, may yield different results.
                Peak Hour Volume Signal Warrant Report [Urban]
*******************************************************************************
Intersection #4 Foothill Blvd/ I-580 WB Off Ramp
*******************************************************************************
Future Volume Alternative: Peak Hour Warrant NOT Met
------------|---------------||---------------||---------------||---------------|
Approach:      North Bound      South Bound       East Bound       West Bound
Movement:     L  -  T  -  R    L  -  T  -  R    L  -  T  -  R    L  -  T  -  R
------------|---------------||---------------||---------------||---------------|
Control:        Stop Sign        Stop Sign       Uncontrolled     Uncontrolled
Lanes:        2  0  0  0  1    0  0  0  0  0    0  0  2  0  0    0  0  2  0  0
Initial Vol:  405    0    18     0    0     0     0  163     0     0  321     0
------------|---------------||---------------||---------------||---------------|
Major Street Volume:             484
Minor Approach Volume:           423
Minor Approach Volume Threshold: 686
-------------------------------------------------------------------------------
SIGNAL WARRANT DISCLAIMER
This peak hour signal warrant analysis should be considered solely as an
"indicator" of the likelihood of an unsignalized intersection warranting
a traffic signal in the future.  Intersections that exceed this warrant
are probably more likely to meet one or more of the other volume based
signal warrant (such as the 4-hour or 8-hour warrants).

The peak hour warrant analysis in this report is not intended to replace
a rigorous and complete traffic signal warrant analysis by the responsible
jurisdiction.  Consideration of the other signal warrants, which is beyond
the scope of this software, may yield different results.
```


Copyright (c) 2008 Dowling Associates, Inc. Licensed to TJKM, PLEASANTON, CA

Level Of Service Computation Report
2000 HCM Operations (Future Volume Alternative)
Existing plus Project AM

Intersection #5: Fairmont Drive/Foothill Blvd

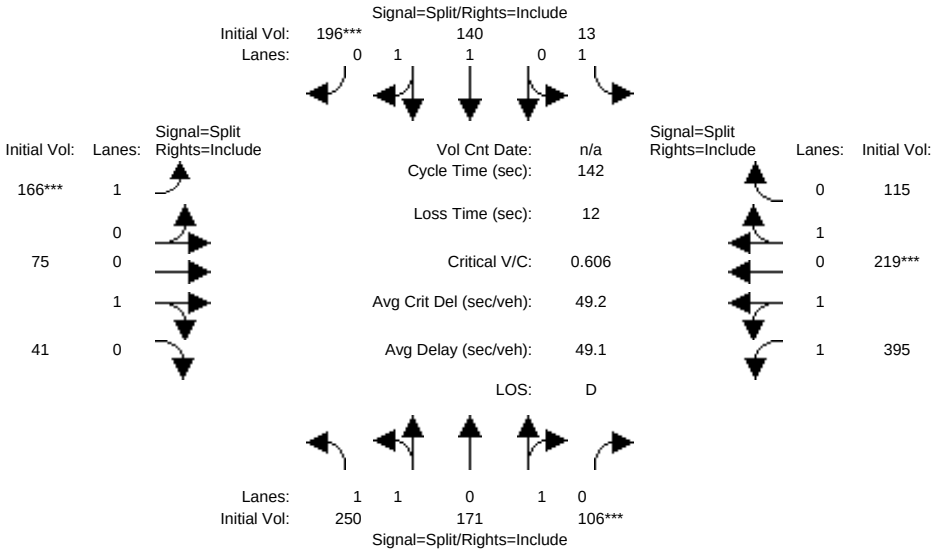

Street Name:	Fairmont Drive						Foothill Blvd					
Approach:	North Bound			South Bound			East Bound			West Bound		
Movement:	L -	T -	R	L -	T -	R	L -	T -	R	L -	T -	R
Min. Green:	2	2	2	2	2	2	2	2	2	2	2	2
Y+R:	4.1	4.1	4.1	4.1	4.1	4.1	4.4	4.4	4.4	4.6	4.6	4.6
Volume Module:												
Base Vol:	250	166	106	13	136	192	152	75	41	395	219	106
Growth Adj:	1.00	1.00	1.00	1.00	1.00	1.00	1.00	1.00	1.00	1.00	1.00	1.00
Initial Bse:	250	166	106	13	136	192	152	75	41	395	219	106
Added Vol:	0	5	0	0	4	4	14	0	0	0	0	9
PasserByVol:	0	0	0	0	0	0	0	0	0	0	0	0
Initial Fut:	250	171	106	13	140	196	166	75	41	395	219	115
User Adj:	1.00	1.00	1.00	1.00	1.00	1.00	1.00	1.00	1.00	1.00	1.00	1.00
PHF Adj:	0.76	0.76	0.76	0.78	0.78	0.78	0.85	0.85	0.85	0.89	0.89	0.89
PHF Volume:	329	225	139	17	179	251	195	88	48	444	246	129
Reduct Vol:	0	0	0	0	0	0	0	0	0	0	0	0
Reduced Vol:	329	225	139	17	179	251	195	88	48	444	246	129
PCE Adj:	1.00	1.00	1.00	1.00	1.00	1.00	1.00	1.00	1.00	1.00	1.00	1.00
MLF Adj:	1.00	1.00	1.00	1.00	1.00	1.00	1.00	1.00	1.00	1.00	1.00	1.00
FinalVolume:	329	225	139	17	179	251	195	88	48	444	246	129
Saturation Flow Module:												
Sat/Lane:	1900	1900	1900	1900	1900	1900	1900	1900	1900	1900	1900	1900
Adjustment:	0.90	0.90	0.90	0.95	0.87	0.87	0.95	0.95	0.95	0.90	0.90	0.90
Lanes:	1.43	0.97	0.60	1.00	1.00	1.00	1.00	0.65	0.35	1.63	0.90	0.47
Final Sat.:	2434	1665	1032	1805	1648	1648	1805	1163	636	2789	1546	812
Capacity Analysis Module:												
Vol/Sat:	0.14	0.14	0.14	0.01	0.11	0.15	0.11	0.08	0.08	0.16	0.16	0.16
Crit Moves:			****			****	****				****	
Green/Cycle:	0.22	0.22	0.22	0.25	0.25	0.25	0.18	0.18	0.18	0.26	0.26	0.26
Volume/Cap:	0.61	0.61	0.61	0.04	0.43	0.61	0.61	0.42	0.42	0.61	0.61	0.61
Uniform Del:	49.6	49.6	49.6	40.1	44.6	46.9	53.7	51.8	51.8	45.9	45.9	45.9
IncremntDel:	0.9	0.9	0.9	0.0	0.3	1.5	3.3	0.9	0.9	0.8	0.8	0.8
InitQueuDel:	0.0	0.0	0.0	0.0	0.0	0.0	0.0	0.0	0.0	0.0	0.0	0.0
Delay Adj:	1.00	1.00	1.00	1.00	1.00	1.00	1.00	1.00	1.00	1.00	1.00	1.00
Delay/Veh:	50.5	50.5	50.5	40.2	44.9	48.4	57.0	52.8	52.8	46.7	46.7	46.7
User DelAdj:	1.00	1.00	1.00	1.00	1.00	1.00	1.00	1.00	1.00	1.00	1.00	1.00
AdjDel/Veh:	50.5	50.5	50.5	40.2	44.9	48.4	57.0	52.8	52.8	46.7	46.7	46.7
LOS by Move:	D	D	D	D	D	D	E	D	D	D	D	D
HCM2kAvgQ:	9	9	9	1	7	11	8	5	5	11	11	11

Copyright (c) 2008 Dowling Associates, Inc. Licensed to TJKM, PLEASANTON, CA

Level Of Service Computation Report
2000 HCM Operations (Future Volume Alternative)
Existing plus Project PM

Intersection #5: Fairmont Drive/Foothill Blvd

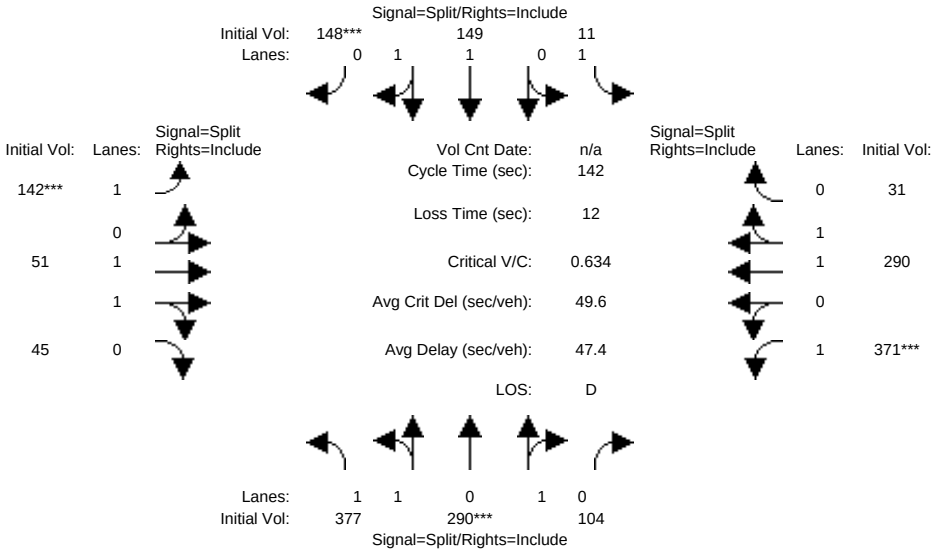

Street Name:	Fairmont Drive						Foothill Blvd					
Approach:	North Bound			South Bound			East Bound			West Bound		
Movement:	L -	T -	R	L -	T -	R	L -	T -	R	L -	T -	R
Min. Green:	2	2	2	2	2	2	2	2	2	2	2	2
Y+R:	4.1	4.1	4.1	4.1	4.1	4.1	4.4	4.4	4.4	4.6	4.6	4.6
Volume Module:												
Base Vol:	377	288	104	11	139	138	137	51	45	371	290	28
Growth Adj:	1.00	1.00	1.00	1.00	1.00	1.00	1.00	1.00	1.00	1.00	1.00	1.00
Initial Bse:	377	288	104	11	139	138	137	51	45	371	290	28
Added Vol:	0	2	0	0	10	10	5	0	0	0	0	3
PasserByVol:	0	0	0	0	0	0	0	0	0	0	0	0
Initial Fut:	377	290	104	11	149	148	142	51	45	371	290	31
User Adj:	1.00	1.00	1.00	1.00	1.00	1.00	1.00	1.00	1.00	1.00	1.00	1.00
PHF Adj:	0.91	0.91	0.91	0.86	0.86	0.86	0.83	0.83	0.83	0.94	0.94	0.94
PHF Volume:	414	319	114	13	173	172	171	61	54	395	309	33
Reduct Vol:	0	0	0	0	0	0	0	0	0	0	0	0
Reduced Vol:	414	319	114	13	173	172	171	61	54	395	309	33
PCE Adj:	1.00	1.00	1.00	1.00	1.00	1.00	1.00	1.00	1.00	1.00	1.00	1.00
MLF Adj:	1.00	1.00	1.00	1.00	1.00	1.00	1.00	1.00	1.00	1.00	1.00	1.00
FinalVolume:	414	319	114	13	173	172	171	61	54	395	309	33
Saturation Flow Module:												
Sat/Lane:	1900	1900	1900	1900	1900	1900	1900	1900	1900	1900	1900	1900
Adjustment:	0.91	0.91	0.91	0.95	0.88	0.88	0.95	0.88	0.88	0.95	0.94	0.94
Lanes:	1.47	1.13	0.40	1.00	1.00	1.00	1.00	1.06	0.94	1.00	1.81	0.19
Final Sat.:	2533	1948	699	1805	1675	1664	1805	1784	1574	1805	3212	343
Capacity Analysis Module:												
Vol/Sat:	0.16	0.16	0.16	0.01	0.10	0.10	0.09	0.03	0.03	0.22	0.10	0.10
Crit Moves:		****				****	****			****		
Green/Cycle:	0.26	0.26	0.26	0.16	0.16	0.16	0.15	0.15	0.15	0.34	0.34	0.34
Volume/Cap:	0.63	0.63	0.63	0.04	0.63	0.63	0.63	0.23	0.23	0.63	0.28	0.28
Uniform Del:	46.7	46.7	46.7	50.1	55.5	55.5	56.7	53.2	53.2	39.0	33.7	33.7
IncremntDel:	1.0	1.0	1.0	0.1	2.5	2.5	4.9	0.2	0.2	2.1	0.1	0.1
InitQueuDel:	0.0	0.0	0.0	0.0	0.0	0.0	0.0	0.0	0.0	0.0	0.0	0.0
Delay Adj:	1.00	1.00	1.00	1.00	1.00	1.00	1.00	1.00	1.00	1.00	1.00	1.00
Delay/Veh:	47.7	47.7	47.7	50.1	57.9	57.9	61.6	53.4	53.4	41.1	33.8	33.8
User DelAdj:	1.00	1.00	1.00	1.00	1.00	1.00	1.00	1.00	1.00	1.00	1.00	1.00
AdjDel/Veh:	47.7	47.7	47.7	50.1	57.9	57.9	61.6	53.4	53.4	41.1	33.8	33.8
LOS by Move:	D	D	D	D	E	E	E	D	D	D	C	C
HCM2kAvgQ:	11	11	11	0	8	8	7	2	2	15	6	6

Copyright (c) 2008 Dowling Associates, Inc. Licensed to TJKM, PLEASANTON, CA

Level Of Service Computation Report
2000 HCM Operations (Future Volume Alternative)
Existing plus Project AM

Intersection #6: Fairmont Drive/ E 14th Street

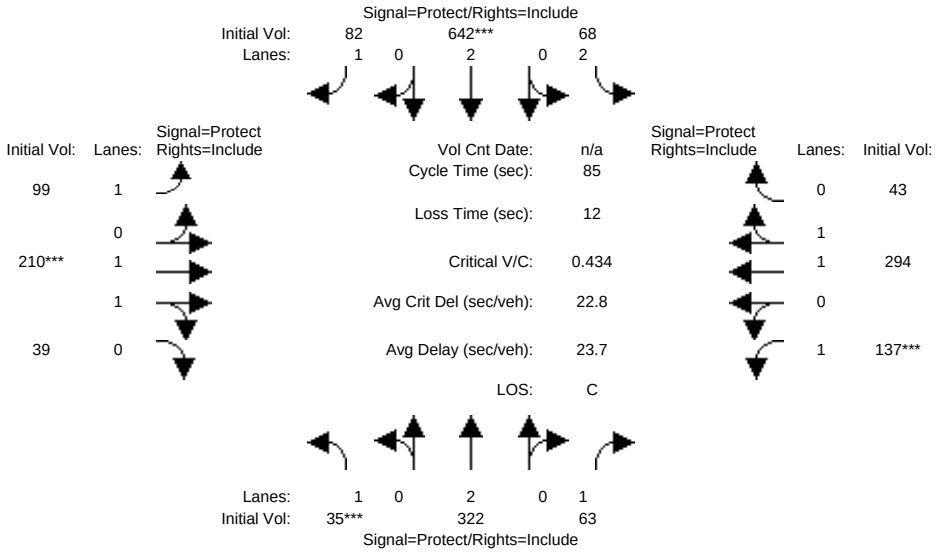

Street Name:	Fairmont Drive						E 14th Street					
Approach:	North Bound			South Bound			East Bound			West Bound		
Movement:	L -	T -	R	L -	T -	R	L -	T -	R	L -	T -	R
Min. Green:	4	4	4	4	4	4	4	10	10	4	10	10
Y+R:	3.7	4.6	4.6	3.7	4.6	4.6	3.7	4.6	4.6	3.7	4.6	4.6
Volume Module:												
Base Vol:	35	320	63	68	642	82	97	210	39	137	294	41
Growth Adj:	1.00	1.00	1.00	1.00	1.00	1.00	1.00	1.00	1.00	1.00	1.00	1.00
Initial Bse:	35	320	63	68	642	82	97	210	39	137	294	41
Added Vol:	0	2	0	0	0	0	2	0	0	0	0	2
PasserByVol:	0	0	0	0	0	0	0	0	0	0	0	0
Initial Fut:	35	322	63	68	642	82	99	210	39	137	294	43
User Adj:	1.00	1.00	1.00	1.00	1.00	1.00	1.00	1.00	1.00	1.00	1.00	1.00
PHF Adj:	0.89	0.89	0.89	0.92	0.92	0.92	0.94	0.94	0.94	0.92	0.92	0.92
PHF Volume:	39	362	71	74	698	89	105	223	41	149	320	47
Reduct Vol:	0	0	0	0	0	0	0	0	0	0	0	0
Reduced Vol:	39	362	71	74	698	89	105	223	41	149	320	47
PCE Adj:	1.00	1.00	1.00	1.00	1.00	1.00	1.00	1.00	1.00	1.00	1.00	1.00
MLF Adj:	1.00	1.00	1.00	1.00	1.00	1.00	1.00	1.00	1.00	1.00	1.00	1.00
FinalVolume:	39	362	71	74	698	89	105	223	41	149	320	47
Saturation Flow Module:												
Sat/Lane:	1900	1900	1900	1900	1900	1900	1900	1900	1900	1900	1900	1900
Adjustment:	0.95	0.95	0.85	0.92	0.95	0.85	0.95	0.93	0.93	0.95	0.93	0.93
Lanes:	1.00	2.00	1.00	2.00	2.00	1.00	1.00	1.69	0.31	1.00	1.74	0.26
Final Sat.:	1805	3610	1615	3502	3610	1615	1805	2972	552	1805	3090	452
Capacity Analysis Module:												
Vol/Sat:	0.02	0.10	0.04	0.02	0.19	0.06	0.06	0.08	0.08	0.08	0.10	0.10
Crit Moves:	****				****			****		****		
Green/Cycle:	0.05	0.34	0.34	0.16	0.45	0.45	0.12	0.17	0.17	0.19	0.24	0.24
Volume/Cap:	0.43	0.30	0.13	0.13	0.43	0.12	0.48	0.43	0.43	0.43	0.43	0.43
Uniform Del:	39.2	20.7	19.5	30.8	16.2	13.8	34.9	31.4	31.4	30.4	27.2	27.2
IncremntDel:	3.3	0.1	0.1	0.1	0.2	0.1	1.7	0.5	0.5	0.9	0.3	0.3
InitQueuDel:	0.0	0.0	0.0	0.0	0.0	0.0	0.0	0.0	0.0	0.0	0.0	0.0
Delay Adj:	1.00	1.00	1.00	1.00	1.00	1.00	1.00	1.00	1.00	1.00	1.00	1.00
Delay/Veh:	42.5	20.9	19.6	30.9	16.4	13.9	36.6	31.9	31.9	31.3	27.5	27.5
User DelAdj:	1.00	1.00	1.00	1.00	1.00	1.00	1.00	1.00	1.00	1.00	1.00	1.00
AdjDel/Veh:	42.5	20.9	19.6	30.9	16.4	13.9	36.6	31.9	31.9	31.3	27.5	27.5
LOS by Move:	D	C	B	C	B	B	D	C	C	C	C	C
HCM2kAvgQ:	2	4	1	1	7	1	3	4	4	4	5	5

Copyright (c) 2008 Dowling Associates, Inc. Licensed to TJKM, PLEASANTON, CA

Level Of Service Computation Report
2000 HCM Operations (Future Volume Alternative)
Existing plus Project PM

Intersection #6: Fairmont Drive/ E 14th Street

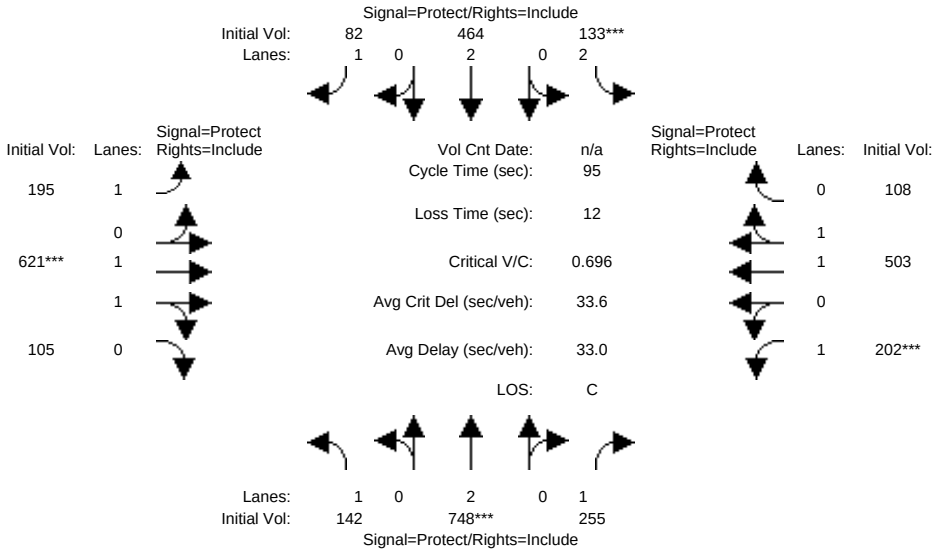

Street Name:	Fairmont Drive						E 14th Street					
Approach:	North Bound			South Bound			East Bound			West Bound		
Movement:	L -	T -	R	L -	T -	R	L -	T -	R	L -	T -	R
Min. Green:	4	4	4	4	4	4	4	10	10	4	10	10
Y+R:	3.7	4.6	4.6	3.7	4.6	4.6	3.7	4.6	4.6	3.7	4.6	4.6
Volume Module:												
Base Vol:	142	747	255	132	463	81	194	621	105	202	503	107
Growth Adj:	1.00	1.00	1.00	1.00	1.00	1.00	1.00	1.00	1.00	1.00	1.00	1.00
Initial Bse:	142	747	255	132	463	81	194	621	105	202	503	107
Added Vol:	0	1	0	1	1	1	1	0	0	0	0	1
PasserByVol:	0	0	0	0	0	0	0	0	0	0	0	0
Initial Fut:	142	748	255	133	464	82	195	621	105	202	503	108
User Adj:	1.00	1.00	1.00	1.00	1.00	1.00	1.00	1.00	1.00	1.00	1.00	1.00
PHF Adj:	0.96	0.96	0.96	0.88	0.88	0.88	0.91	0.91	0.91	0.91	0.91	0.91
PHF Volume:	148	779	266	151	527	93	214	682	115	222	553	119
Reduct Vol:	0	0	0	0	0	0	0	0	0	0	0	0
Reduced Vol:	148	779	266	151	527	93	214	682	115	222	553	119
PCE Adj:	1.00	1.00	1.00	1.00	1.00	1.00	1.00	1.00	1.00	1.00	1.00	1.00
MLF Adj:	1.00	1.00	1.00	1.00	1.00	1.00	1.00	1.00	1.00	1.00	1.00	1.00
FinalVolume:	148	779	266	151	527	93	214	682	115	222	553	119
Saturation Flow Module:												
Sat/Lane:	1900	1900	1900	1900	1900	1900	1900	1900	1900	1900	1900	1900
Adjustment:	0.95	0.95	0.85	0.92	0.95	0.85	0.95	0.93	0.93	0.95	0.92	0.92
Lanes:	1.00	2.00	1.00	2.00	2.00	1.00	1.00	1.71	0.29	1.00	1.65	0.35
Final Sat.:	1805	3610	1615	3502	3610	1615	1805	3020	511	1805	2892	621
Capacity Analysis Module:												
Vol/Sat:	0.08	0.22	0.16	0.04	0.15	0.06	0.12	0.23	0.23	0.12	0.19	0.19
Crit Moves:		****		****				****		****		
Green/Cycle:	0.13	0.31	0.31	0.06	0.24	0.24	0.19	0.32	0.32	0.18	0.31	0.31
Volume/Cap:	0.61	0.70	0.53	0.70	0.61	0.24	0.62	0.70	0.70	0.70	0.62	0.62
Uniform Del:	38.8	28.8	27.1	43.7	32.3	29.2	35.2	28.0	28.0	36.7	28.0	28.0
IncremntDel:	4.6	1.9	1.1	9.5	1.3	0.3	3.4	1.9	1.9	6.6	1.1	1.1
InitQueuDel:	0.0	0.0	0.0	0.0	0.0	0.0	0.0	0.0	0.0	0.0	0.0	0.0
Delay Adj:	1.00	1.00	1.00	1.00	1.00	1.00	1.00	1.00	1.00	1.00	1.00	1.00
Delay/Veh:	43.4	30.8	28.1	53.1	33.6	29.6	38.5	29.9	29.9	43.3	29.1	29.1
User DelAdj:	1.00	1.00	1.00	1.00	1.00	1.00	1.00	1.00	1.00	1.00	1.00	1.00
AdjDel/Veh:	43.4	30.8	28.1	53.1	33.6	29.6	38.5	29.9	29.9	43.3	29.1	29.1
LOS by Move:	D	C	C	D	C	C	D	C	C	D	C	C
HCM2kAvgQ:	5	12	7	4	8	2	7	12	12	7	9	9

Copyright (c) 2008 Dowling Associates, Inc. Licensed to TJKM, PLEASANTON, CA

Level Of Service Computation Report
2000 HCM Operations (Future Volume Alternative)
Existing plus Project AM

Intersection #7: 150th Avenue/ E 14th Street

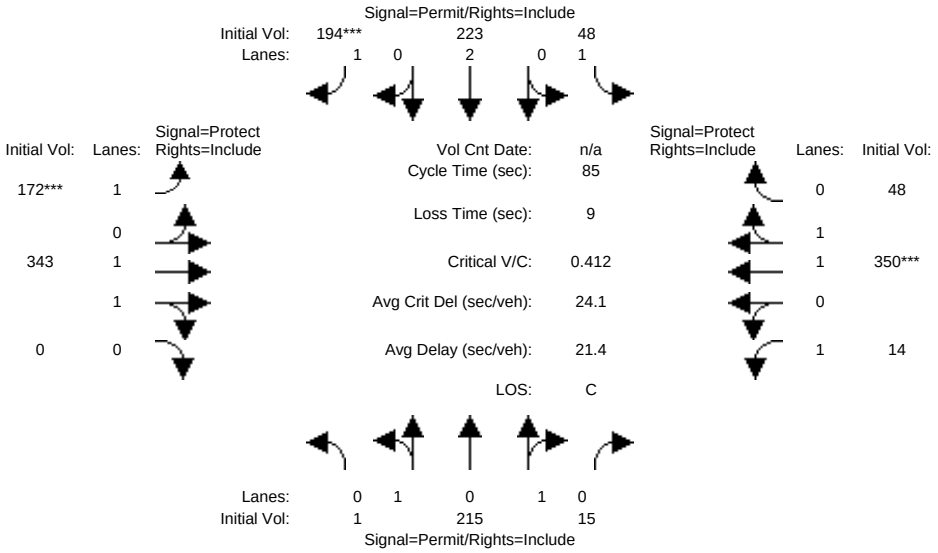

Street Name:	150th Avenue						E 14th Street					
Approach:	North Bound			South Bound			East Bound			West Bound		
Movement:	L -	T -	R	L -	T -	R	L -	T -	R	L -	T -	R
Min. Green:	9	9	9	8	8	8	4	10	10	4	10	10
Y+R:	4.0	4.0	4.0	4.6	4.6	4.6	3.0	4.0	4.0	3.0	4.0	4.0
Volume Module:												
Base Vol:	1	215	14	48	223	194	172	342	0	14	350	48
Growth Adj:	1.00	1.00	1.00	1.00	1.00	1.00	1.00	1.00	1.00	1.00	1.00	1.00
Initial Bse:	1	215	14	48	223	194	172	342	0	14	350	48
Added Vol:	0	0	1	0	0	0	0	1	0	0	0	0
PasserByVol:	0	0	0	0	0	0	0	0	0	0	0	0
Initial Fut:	1	215	15	48	223	194	172	343	0	14	350	48
User Adj:	1.00	1.00	1.00	1.00	1.00	1.00	1.00	1.00	1.00	1.00	1.00	1.00
PHF Adj:	0.87	0.87	0.87	0.83	0.83	0.83	0.94	0.94	0.94	0.92	0.92	0.92
PHF Volume:	1	247	17	58	269	234	183	365	0	15	380	52
Reduct Vol:	0	0	0	0	0	0	0	0	0	0	0	0
Reduced Vol:	1	247	17	58	269	234	183	365	0	15	380	52
PCE Adj:	1.00	1.00	1.00	1.00	1.00	1.00	1.00	1.00	1.00	1.00	1.00	1.00
MLF Adj:	1.00	1.00	1.00	1.00	1.00	1.00	1.00	1.00	1.00	1.00	1.00	1.00
FinalVolume:	1	247	17	58	269	234	183	365	0	15	380	52
Saturation Flow Module:												
Sat/Lane:	1900	1900	1900	1900	1900	1900	1900	1900	1900	1900	1900	1900
Adjustment:	0.90	0.90	0.90	0.55	0.95	0.85	0.95	0.95	0.95	0.95	0.93	0.93
Lanes:	0.01	1.86	0.13	1.00	2.00	1.00	1.00	2.00	0.00	1.00	1.76	0.24
Final Sat.:	15	3173	221	1043	3610	1615	1805	3610	0	1805	3117	428
Capacity Analysis Module:												
Vol/Sat:	0.08	0.08	0.08	0.06	0.07	0.14	0.10	0.10	0.00	0.01	0.12	0.12
Crit Moves:						****	****				****	
Green/Cycle:	0.35	0.35	0.35	0.35	0.35	0.35	0.25	0.39	0.00	0.16	0.30	0.30
Volume/Cap:	0.22	0.22	0.22	0.16	0.21	0.41	0.41	0.26	0.00	0.05	0.41	0.41
Uniform Del:	19.4	19.4	19.4	18.9	19.3	20.9	26.9	17.7	0.0	30.6	24.0	24.0
IncremntDel:	0.1	0.1	0.1	0.2	0.1	0.5	0.6	0.1	0.0	0.1	0.3	0.3
InitQueuDel:	0.0	0.0	0.0	0.0	0.0	0.0	0.0	0.0	0.0	0.0	0.0	0.0
Delay Adj:	1.00	1.00	1.00	1.00	1.00	1.00	1.00	1.00	0.00	1.00	1.00	1.00
Delay/Veh:	19.5	19.5	19.5	19.1	19.4	21.4	27.5	17.8	0.0	30.7	24.2	24.2
User DelAdj:	1.00	1.00	1.00	1.00	1.00	1.00	1.00	1.00	1.00	1.00	1.00	1.00
AdjDel/Veh:	19.5	19.5	19.5	19.1	19.4	21.4	27.5	17.8	0.0	30.7	24.2	24.2
LOS by Move:	B	B	B	B	B	C	C	B	A	C	C	C
HCM2kAvgQ:	2	2	2	1	3	5	4	3	0	0	5	5

Copyright (c) 2008 Dowling Associates, Inc. Licensed to TJKM, PLEASANTON, CA

Level Of Service Computation Report
2000 HCM Operations (Future Volume Alternative)
Existing plus Project PM

Intersection #7: 150th Avenue/ E 14th Street

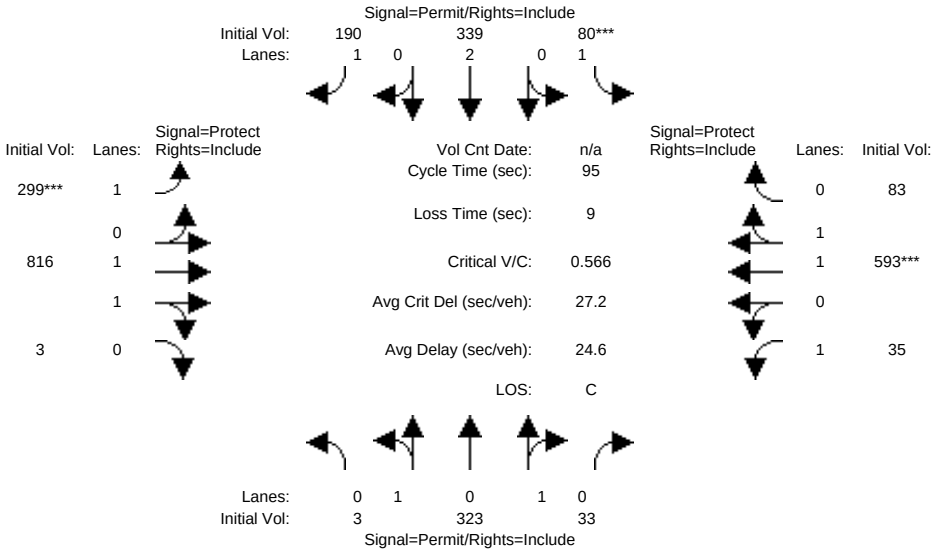

Street Name:	150th Avenue						E 14th Street					
Approach:	North Bound			South Bound			East Bound			West Bound		
Movement:	L -	T -	R	L -	T -	R	L -	T -	R	L -	T -	R
Min. Green:	9	9	9	8	8	8	4	10	10	4	10	10
Y+R:	4.0	4.0	4.0	4.6	4.6	4.6	3.0	4.0	4.0	3.0	4.0	4.0
Volume Module:												
Base Vol:	3	323	33	80	339	190	299	816	3	35	592	83
Growth Adj:	1.00	1.00	1.00	1.00	1.00	1.00	1.00	1.00	1.00	1.00	1.00	1.00
Initial Bse:	3	323	33	80	339	190	299	816	3	35	592	83
Added Vol:	0	0	0	0	0	0	0	0	0	0	1	0
PasserByVol:	0	0	0	0	0	0	0	0	0	0	0	0
Initial Fut:	3	323	33	80	339	190	299	816	3	35	593	83
User Adj:	1.00	1.00	1.00	1.00	1.00	1.00	1.00	1.00	1.00	1.00	1.00	1.00
PHF Adj:	0.90	0.90	0.90	0.89	0.89	0.89	0.91	0.94	0.91	0.96	0.96	0.96
PHF Volume:	3	359	37	90	381	213	329	868	3	36	618	86
Reduct Vol:	0	0	0	0	0	0	0	0	0	0	0	0
Reduced Vol:	3	359	37	90	381	213	329	868	3	36	618	86
PCE Adj:	1.00	1.00	1.00	1.00	1.00	1.00	1.00	1.00	1.00	1.00	1.00	1.00
MLF Adj:	1.00	1.00	1.00	1.00	1.00	1.00	1.00	1.00	1.00	1.00	1.00	1.00
FinalVolume:	3	359	37	90	381	213	329	868	3	36	618	86
Saturation Flow Module:												
Sat/Lane:	1900	1900	1900	1900	1900	1900	1900	1900	1900	1900	1900	1900
Adjustment:	0.89	0.89	0.89	0.36	0.95	0.85	0.95	0.95	0.95	0.95	0.93	0.93
Lanes:	0.02	1.80	0.18	1.00	2.00	1.00	1.00	1.99	0.01	1.00	1.75	0.25
Final Sat.:	28	3049	311	684	3610	1615	1805	3593	14	1805	3110	435
Capacity Analysis Module:												
Vol/Sat:	0.12	0.12	0.12	0.13	0.11	0.13	0.18	0.24	0.24	0.02	0.20	0.20
Crit Moves:				****			****				****	
Green/Cycle:	0.23	0.23	0.23	0.23	0.23	0.23	0.32	0.57	0.57	0.10	0.35	0.35
Volume/Cap:	0.51	0.51	0.51	0.57	0.45	0.57	0.57	0.42	0.42	0.20	0.57	0.57
Uniform Del:	31.7	31.7	31.7	32.2	31.3	32.3	26.7	11.4	11.4	39.3	25.0	25.0
IncremntDel:	0.5	0.5	0.5	4.7	0.4	2.1	1.3	0.1	0.1	0.6	0.6	0.6
InitQueuDel:	0.0	0.0	0.0	0.0	0.0	0.0	0.0	0.0	0.0	0.0	0.0	0.0
Delay Adj:	1.00	1.00	1.00	1.00	1.00	1.00	1.00	1.00	1.00	1.00	1.00	1.00
Delay/Veh:	32.3	32.3	32.3	36.9	31.7	34.3	28.0	11.6	11.6	39.8	25.6	25.6
User DelAdj:	1.00	1.00	1.00	1.00	1.00	1.00	1.00	1.00	1.00	1.00	1.00	1.00
AdjDel/Veh:	32.3	32.3	32.3	36.9	31.7	34.3	28.0	11.6	11.6	39.8	25.6	25.6
LOS by Move:	C	C	C	D	C	C	C	B	B	D	C	C
HCM2kAvgQ:	5	5	5	3	5	6	8	8	8	1	9	9

Copyright (c) 2008 Dowling Associates, Inc. Licensed to TJKM, PLEASANTON, CA

Level Of Service Computation Report
2000 HCM Operations (Future Volume Alternative)
Existing plus Project AM

Intersection #8: 150th Avenue/ HesperianBlvd

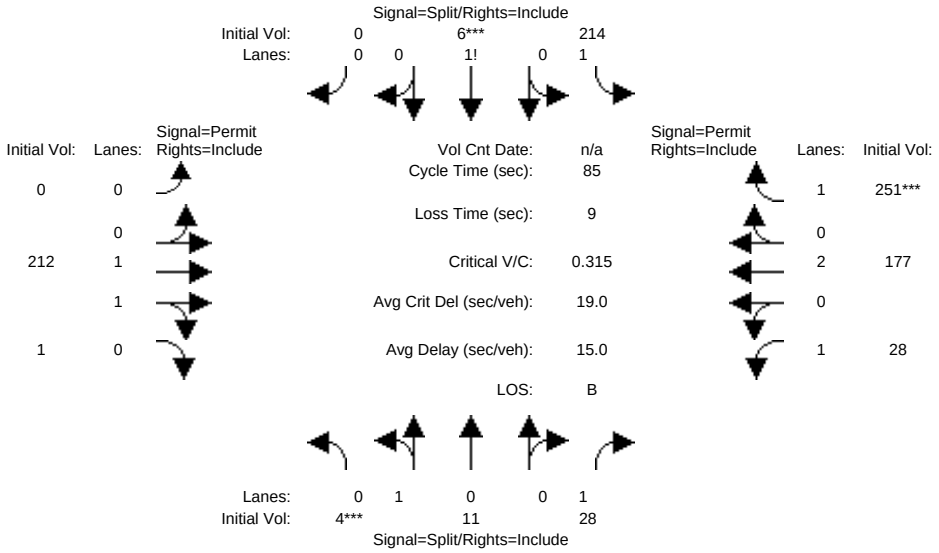

Street Name:	150th Avenue						Hesperian Blvd					
Approach:	North Bound			South Bound			East Bound			West Bound		
Movement:	L -	T -	R	L -	T -	R	L -	T -	R	L -	T -	R
Min. Green:	8	8	8	15	15	15	11	11	11	12	12	12
Y+R:	4.0	4.0	4.0	4.6	4.6	4.6	4.9	4.9	4.9	4.9	4.9	4.9
Volume Module:												
Base Vol:	4	11	28	214	6	0	0	212	1	28	177	250
Growth Adj:	1.00	1.00	1.00	1.00	1.00	1.00	1.00	1.00	1.00	1.00	1.00	1.00
Initial Bse:	4	11	28	214	6	0	0	212	1	28	177	250
Added Vol:	0	0	0	0	0	0	0	0	0	0	0	1
PasserByVol:	0	0	0	0	0	0	0	0	0	0	0	0
Initial Fut:	4	11	28	214	6	0	0	212	1	28	177	251
User Adj:	1.00	1.00	1.00	1.00	1.00	1.00	1.00	1.00	1.00	1.00	1.00	1.00
PHF Adj:	0.72	0.72	0.72	0.77	0.77	0.77	0.77	0.77	0.77	0.82	0.82	0.82
PHF Volume:	6	15	39	278	8	0	0	275	1	34	216	306
Reduct Vol:	0	0	0	0	0	0	0	0	0	0	0	0
Reduced Vol:	6	15	39	278	8	0	0	275	1	34	216	306
PCE Adj:	1.00	1.00	1.00	1.00	1.00	1.00	1.00	1.00	1.00	1.00	1.00	1.00
MLF Adj:	1.00	1.00	1.00	1.00	1.00	1.00	1.00	1.00	1.00	1.00	1.00	1.00
FinalVolume:	6	15	39	278	8	0	0	275	1	34	216	306
Saturation Flow Module:												
Sat/Lane:	1900	1900	1900	1900	1900	1900	1900	1900	1900	1900	1900	1900
Adjustment:	0.99	0.99	0.85	0.95	0.95	1.00	1.00	0.95	0.95	0.57	0.95	0.85
Lanes:	0.27	0.73	1.00	1.95	0.05	0.00	0.00	1.99	0.01	1.00	2.00	1.00
Final Sat.:	500	1375	1615	3529	96	0	0	3589	17	1087	3610	1615
Capacity Analysis Module:												
Vol/Sat:	0.01	0.01	0.02	0.08	0.08	0.00	0.00	0.08	0.08	0.03	0.06	0.19
Crit Moves:	****				****							****
Green/Cycle:	0.09	0.09	0.09	0.24	0.24	0.00	0.00	0.56	0.56	0.56	0.56	0.56
Volume/Cap:	0.12	0.12	0.26	0.33	0.34	0.00	0.00	0.14	0.14	0.06	0.11	0.34
Uniform Del:	35.3	35.3	35.7	26.7	26.7	0.0	0.0	8.9	8.9	8.5	8.7	10.1
IncremntDel:	0.3	0.3	0.9	0.2	0.2	0.0	0.0	0.0	0.0	0.0	0.0	0.2
InitQueuDel:	0.0	0.0	0.0	0.0	0.0	0.0	0.0	0.0	0.0	0.0	0.0	0.0
Delay Adj:	1.00	1.00	1.00	1.00	1.00	0.00	0.00	1.00	1.00	1.00	1.00	1.00
Delay/Veh:	35.6	35.6	36.6	26.9	27.0	0.0	0.0	8.9	8.9	8.5	8.8	10.4
User DelAdj:	1.00	1.00	1.00	1.00	1.00	1.00	1.00	1.00	1.00	1.00	1.00	1.00
AdjDel/Veh:	35.6	35.6	36.6	26.9	27.0	0.0	0.0	8.9	8.9	8.5	8.8	10.4
LOS by Move:	D	D	D	C	C	A	A	A	A	A	A	B
HCM2kAvgQ:	1	1	1	3	3	0	0	2	2	0	1	4

Copyright (c) 2008 Dowling Associates, Inc. Licensed to TJKM, PLEASANTON, CA

Level Of Service Computation Report
2000 HCM Operations (Future Volume Alternative)
Existing plus Project PM

Intersection #8: 150th Avenue/ HesperianBlvd

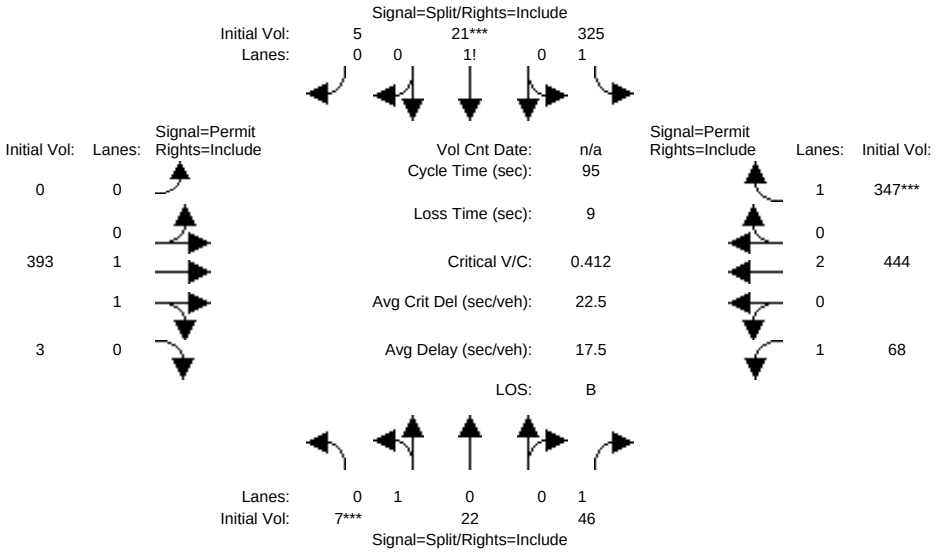

Street Name:	150th Avenue						Hesperian Blvd					
Approach:	North Bound			South Bound			East Bound			West Bound		
Movement:	L -	T -	R	L -	T -	R	L -	T -	R	L -	T -	R
Min. Green:	8	8	8	15	15	15	11	11	11	12	12	12
Y+R:	4.0	4.0	4.0	4.6	4.6	4.6	4.9	4.9	4.9	4.9	4.9	4.9
Volume Module:												
Base Vol:	7	22	46	325	21	5	0	393	3	68	444	347
Growth Adj:	1.00	1.00	1.00	1.00	1.00	1.00	1.00	1.00	1.00	1.00	1.00	1.00
Initial Bse:	7	22	46	325	21	5	0	393	3	68	444	347
Added Vol:	0	0	0	0	0	0	0	0	0	0	0	0
PasserByVol:	0	0	0	0	0	0	0	0	0	0	0	0
Initial Fut:	7	22	46	325	21	5	0	393	3	68	444	347
User Adj:	1.00	1.00	1.00	1.00	1.00	1.00	1.00	1.00	1.00	1.00	1.00	1.00
PHF Adj:	0.72	0.72	0.72	0.86	0.86	0.86	0.88	0.88	0.88	0.93	0.93	0.93
PHF Volume:	10	31	64	378	24	6	0	447	3	73	477	373
Reduct Vol:	0	0	0	0	0	0	0	0	0	0	0	0
Reduced Vol:	10	31	64	378	24	6	0	447	3	73	477	373
PCE Adj:	1.00	1.00	1.00	1.00	1.00	1.00	1.00	1.00	1.00	1.00	1.00	1.00
MLF Adj:	1.00	1.00	1.00	1.00	1.00	1.00	1.00	1.00	1.00	1.00	1.00	1.00
FinalVolume:	10	31	64	378	24	6	0	447	3	73	477	373
Saturation Flow Module:												
Sat/Lane:	1900	1900	1900	1900	1900	1900	1900	1900	1900	1900	1900	1900
Adjustment:	0.99	0.99	0.85	0.95	0.95	0.95	1.00	0.95	0.95	0.45	0.95	0.85
Lanes:	0.24	0.76	1.00	1.86	0.11	0.03	0.00	1.98	0.02	1.00	2.00	1.00
Final Sat.:	453	1424	1615	3375	202	48	0	3579	27	859	3610	1615
Capacity Analysis Module:												
Vol/Sat:	0.02	0.02	0.04	0.11	0.12	0.12	0.00	0.12	0.12	0.09	0.13	0.23
Crit Moves:	****				****							****
Green/Cycle:	0.10	0.10	0.10	0.28	0.28	0.28	0.00	0.53	0.53	0.53	0.53	0.53
Volume/Cap:	0.22	0.22	0.41	0.40	0.43	0.43	0.00	0.23	0.23	0.16	0.25	0.43
Uniform Del:	39.7	39.7	40.4	27.9	28.2	28.2	0.0	11.9	11.9	11.4	12.0	13.6
IncremntDel:	0.6	0.6	1.8	0.3	0.3	0.3	0.0	0.1	0.1	0.2	0.1	0.4
InitQueuDel:	0.0	0.0	0.0	0.0	0.0	0.0	0.0	0.0	0.0	0.0	0.0	0.0
Delay Adj:	1.00	1.00	1.00	1.00	1.00	1.00	0.00	1.00	1.00	1.00	1.00	1.00
Delay/Veh:	40.3	40.3	42.2	28.1	28.5	28.5	0.0	12.0	12.0	11.6	12.1	13.9
User DelAdj:	1.00	1.00	1.00	1.00	1.00	1.00	1.00	1.00	1.00	1.00	1.00	1.00
AdjDel/Veh:	40.3	40.3	42.2	28.1	28.5	28.5	0.0	12.0	12.0	11.6	12.1	13.9
LOS by Move:	D	D	D	C	C	C	A	B	B	B	B	B
HCM2kAvgQ:	1	1	2	5	5	5	0	4	4	1	4	7

Copyright (c) 2008 Dowling Associates, Inc. Licensed to TJKM, PLEASANTON, CA

Level Of Service Computation Report
2000 HCM Unsignalized (Future Volume Alternative)
Existing plus Project AM

Intersection #9: Fairmont Drive/ North Access Road - with U-turn lane

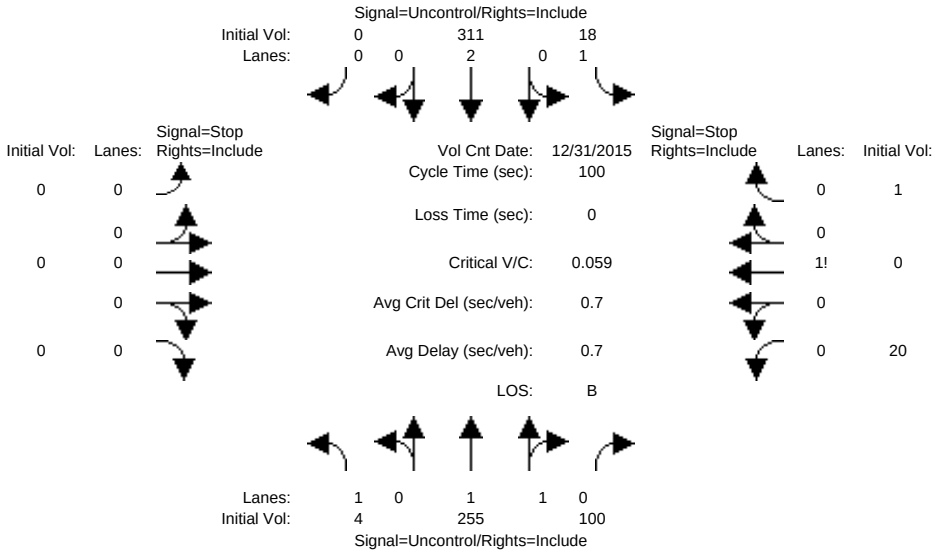


```
Street Name:          Fairmont Drive                  North Access Road
Approach:      North Bound      South Bound       East Bound       West Bound
Movement:     L  -  T  -  R    L  -  T  -  R    L  -  T  -  R    L  -  T  -  R
------------|---------------||---------------||---------------||---------------|
Volume Module: >> Count Date: 31 Dec 2015 <<
Base Vol:       4  255    73    15  311     0     0    0     0    12    0     0
Growth Adj:  1.00 1.00  1.00  1.00 1.00  1.00  1.00 1.00  1.00  1.00 1.00  1.00
Initial Bse:    4  255    73    15  311     0     0    0     0    12    0     0
Added Vol:      0    0    27     3    0     0     0    0     0     8    0     1
PasserByVol:    0    0     0     0    0     0     0    0     0     0    0     0
Initial Fut:    4  255   100    18  311     0     0    0     0    20    0     1
User Adj:    1.00 1.00  1.00  1.00 1.00  1.00  1.00 1.00  1.00  1.00 1.00  1.00
PHF Adj:     0.83 0.83  0.83  0.82 0.82  0.82  1.00 1.00  1.00  0.80 0.80  0.80
PHF Volume:     5  307   120    22  379     0     0    0     0    25    0     1
Reduct Vol:     0    0     0     0    0     0     0    0     0     0    0     0
FinalVolume:    5  307   120    22  379     0     0    0     0    25    0     1
------------|---------------||---------------||---------------||---------------|
Critical Gap Module:
Critical Gp:  4.1 xxxx xxxxx   4.1 xxxx xxxxx xxxxx xxxx xxxxx   6.8  6.5   6.9
FollowUpTim:  2.2 xxxx xxxxx   2.2 xxxx xxxxx xxxxx xxxx xxxxx   3.5  4.0   3.3
------------|---------------||---------------||---------------||---------------|
Capacity Module:
Cnflict Vol:  379 xxxx xxxxx   428 xxxx xxxxx  xxxx xxxx xxxxx   611  800   214
Potent Cap.: 1190 xxxx xxxxx  1142 xxxx xxxxx  xxxx xxxx xxxxx   430  320   797
Move Cap.:   1190 xxxx xxxxx  1142 xxxx xxxxx  xxxx xxxx xxxxx   423  313   797
Volume/Cap:  0.00 xxxx  xxxx  0.02 xxxx  xxxx  xxxx xxxx  xxxx  0.06 0.00  0.00
------------|---------------||---------------||---------------||---------------|
Level Of Service Module:
2Way95thQ:    0.0 xxxx xxxxx   0.1 xxxx xxxxx  xxxx xxxx xxxxx  xxxx xxxx xxxxx
Control Del:  8.0 xxxx xxxxx   8.2 xxxx xxxxx xxxxx xxxx xxxxx xxxxx xxxx xxxxx
LOS by Move:    A    *     *     A    *     *     *    *     *     *    *     *
Movement:     LT - LTR - RT    LT - LTR - RT    LT - LTR - RT    LT - LTR - RT
Shared Cap.: xxxx xxxx xxxxx  xxxx xxxx xxxxx  xxxx xxxx xxxxx  xxxx  432 xxxxx
SharedQueue:xxxxx xxxx xxxxx xxxxx xxxx xxxxx xxxxx xxxx xxxxx xxxxx  0.2 xxxxx
Shrd ConDel:xxxxx xxxx xxxxx xxxxx xxxx xxxxx xxxxx xxxx xxxxx xxxxx 13.9 xxxxx
Shared LOS:     *    *     *     *    *     *     *    *     *     *    B     *
ApproachDel:    xxxxxx           xxxxxx           xxxxxx             13.9
ApproachLOS:         *                *                *                B
Note: Queue reported is the number of cars per lane.
                    Peak Hour Delay Signal Warrant Report
*******************************************************************************
Intersection #9 Fairmont Drive/ North Access Road
*******************************************************************************
Future Volume Alternative: Peak Hour Warrant NOT Met
```


Copyright (c) 2008 Dowling Associates, Inc. Licensed to TJKM, PLEASANTON, CA

```
------------|---------------||---------------||---------------||---------------|
Approach:      North Bound      South Bound       East Bound       West Bound
Movement:     L  -  T  -  R    L  -  T  -  R    L  -  T  -  R    L  -  T  -  R
------------|---------------||---------------||---------------||---------------|
Control:       Uncontrolled     Uncontrolled      Stop Sign        Stop Sign
Lanes:        1  0  1  1  0    1  0  2  0  0    0  0  0  0  0    0  0  1! 0  0
Initial Vol:    4  255   100    18  311     0     0    0     0    20    0     1
ApproachDel:    xxxxxx           xxxxxx           xxxxxx             13.9
------------|---------------||---------------||---------------||---------------|
Approach[westbound][lanes=1][control=Stop Sign]
Signal Warrant Rule #1: [vehicle-hours=0.1]
   FAIL - Vehicle-hours less than 4 for one lane approach.
Signal Warrant Rule #2: [approach volume=21]
   FAIL - Approach volume less than 100 for one lane approach.
Signal Warrant Rule #3: [approach count=3][total volume=709]
   SUCCEED - Total volume greater than or equal to 650 for intersection
             with less than four approaches.
-------------------------------------------------------------------------------
SIGNAL WARRANT DISCLAIMER
This peak hour signal warrant analysis should be considered solely as an
"indicator" of the likelihood of an unsignalized intersection warranting
a traffic signal in the future.  Intersections that exceed this warrant
are probably more likely to meet one or more of the other volume based
signal warrant (such as the 4-hour or 8-hour warrants).

The peak hour warrant analysis in this report is not intended to replace
a rigorous and complete traffic signal warrant analysis by the responsible
jurisdiction.  Consideration of the other signal warrants, which is beyond
the scope of this software, may yield different results.
                Peak Hour Volume Signal Warrant Report [Urban]
*******************************************************************************
Intersection #9 Fairmont Drive/ North Access Road
*******************************************************************************
Future Volume Alternative: Peak Hour Warrant NOT Met
------------|---------------||---------------||---------------||---------------|
Approach:      North Bound      South Bound       East Bound       West Bound
Movement:     L  -  T  -  R    L  -  T  -  R    L  -  T  -  R    L  -  T  -  R
------------|---------------||---------------||---------------||---------------|
Control:       Uncontrolled     Uncontrolled      Stop Sign        Stop Sign
Lanes:        1  0  1  1  0    1  0  2  0  0    0  0  0  0  0    0  0  1! 0  0
Initial Vol:    4  255   100    18  311     0     0    0     0    20    0     1
------------|---------------||---------------||---------------||---------------|
Major Street Volume:             688
Minor Approach Volume:           21
Minor Approach Volume Threshold: 414
-------------------------------------------------------------------------------
SIGNAL WARRANT DISCLAIMER
This peak hour signal warrant analysis should be considered solely as an
"indicator" of the likelihood of an unsignalized intersection warranting
a traffic signal in the future.  Intersections that exceed this warrant
are probably more likely to meet one or more of the other volume based
signal warrant (such as the 4-hour or 8-hour warrants).

The peak hour warrant analysis in this report is not intended to replace
a rigorous and complete traffic signal warrant analysis by the responsible
jurisdiction.  Consideration of the other signal warrants, which is beyond
the scope of this software, may yield different results.
```


Copyright (c) 2008 Dowling Associates, Inc. Licensed to TJKM, PLEASANTON, CA

Level Of Service Computation Report
2000 HCM Unsignalized (Future Volume Alternative)
Existing plus Project PM

Intersection #9: Fairmont Drive/ North Access Road - with U-turn lane

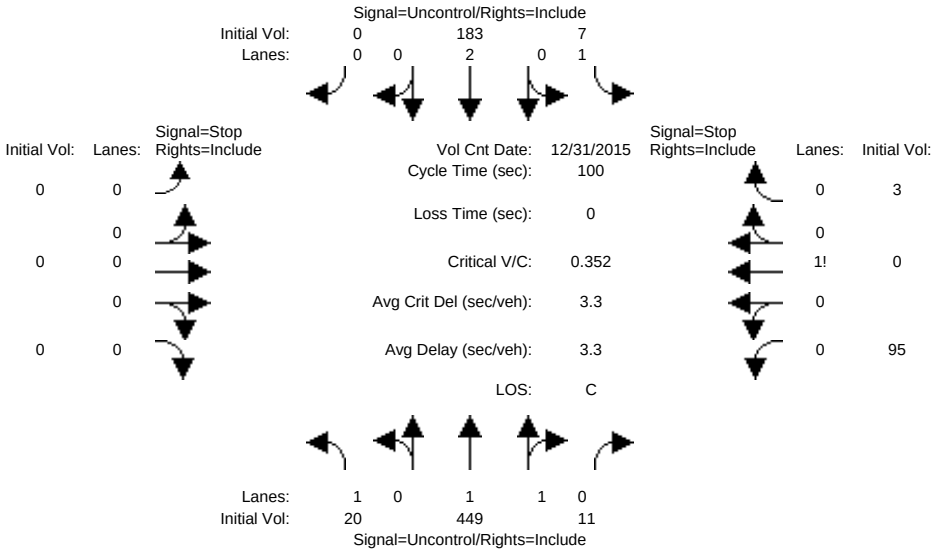


```
Street Name:          Fairmont Drive                  North Access Road
Approach:      North Bound      South Bound       East Bound       West Bound
Movement:     L  -  T  -  R    L  -  T  -  R    L  -  T  -  R    L  -  T  -  R
------------|---------------||---------------||---------------||---------------|
Volume Module: >> Count Date: 31 Dec 2015 <<
Base Vol:      20  449     1     6  183     0     0    0     0    74    0     1
Growth Adj:  1.00 1.00  1.00  1.00 1.00  1.00  1.00 1.00  1.00  1.00 1.00  1.00
Initial Bse:   20  449     1     6  183     0     0    0     0    74    0     1
Added Vol:      0    0    10     1    0     0     0    0     0    21    0     2
PasserByVol:    0    0     0     0    0     0     0    0     0     0    0     0
Initial Fut:   20  449    11     7  183     0     0    0     0    95    0     3
User Adj:    1.00 1.00  1.00  1.00 1.00  1.00  1.00 1.00  1.00  1.00 1.00  1.00
PHF Adj:     0.89 0.89  0.89  0.89 0.89  0.89  1.00 1.00  1.00  0.70 0.70  0.70
PHF Volume:    22  504    12     8  206     0     0    0     0   136    0     4
Reduct Vol:     0    0     0     0    0     0     0    0     0     0    0     0
FinalVolume:   22  504    12     8  206     0     0    0     0   136    0     4
------------|---------------||---------------||---------------||---------------|
Critical Gap Module:
Critical Gp:  4.1 xxxx xxxxx   4.1 xxxx xxxxx xxxxx xxxx xxxxx   6.8  6.5   6.9
FollowUpTim:  2.2 xxxx xxxxx   2.2 xxxx xxxxx xxxxx xxxx xxxxx   3.5  4.0   3.3
------------|---------------||---------------||---------------||---------------|
Capacity Module:
Cnflict Vol:  206 xxxx xxxxx   517 xxxx xxxxx  xxxx xxxx xxxxx   674  777   258
Potent Cap.: 1378 xxxx xxxxx  1059 xxxx xxxxx  xxxx xxxx xxxxx   392  330   747
Move Cap.:   1378 xxxx xxxxx  1059 xxxx xxxxx  xxxx xxxx xxxxx   385  323   747
Volume/Cap:  0.02 xxxx  xxxx  0.01 xxxx  xxxx  xxxx xxxx  xxxx  0.35 0.00  0.01
------------|---------------||---------------||---------------||---------------|
Level Of Service Module:
2Way95thQ:    0.0 xxxx xxxxx   0.0 xxxx xxxxx  xxxx xxxx xxxxx  xxxx xxxx xxxxx
Control Del:  7.7 xxxx xxxxx   8.4 xxxx xxxxx xxxxx xxxx xxxxx xxxxx xxxx xxxxx
LOS by Move:    A    *     *     A    *     *     *    *     *     *    *     *
Movement:     LT - LTR - RT    LT - LTR - RT    LT - LTR - RT    LT - LTR - RT
Shared Cap.: xxxx xxxx xxxxx  xxxx xxxx xxxxx  xxxx xxxx xxxxx  xxxx  391 xxxxx
SharedQueue:xxxxx xxxx xxxxx xxxxx xxxx xxxxx xxxxx xxxx xxxxx xxxxx  1.6 xxxxx
Shrd ConDel:xxxxx xxxx xxxxx xxxxx xxxx xxxxx xxxxx xxxx xxxxx xxxxx 19.2 xxxxx
Shared LOS:     *    *     *     *    *     *     *    *     *     *    C     *
ApproachDel:    xxxxxx           xxxxxx           xxxxxx             19.2
ApproachLOS:         *                *                *                C
Note: Queue reported is the number of cars per lane.
                    Peak Hour Delay Signal Warrant Report
*******************************************************************************
Intersection #9 Fairmont Drive/ North Access Road
*******************************************************************************
```


Copyright (c) 2008 Dowling Associates, Inc. Licensed to TJKM, PLEASANTON, CA

```
Future Volume Alternative: Peak Hour Warrant NOT Met
------------|---------------||---------------||---------------||---------------|
Approach:      North Bound      South Bound       East Bound       West Bound
Movement:     L  -  T  -  R    L  -  T  -  R    L  -  T  -  R    L  -  T  -  R
------------|---------------||---------------||---------------||---------------|
Control:       Uncontrolled     Uncontrolled      Stop Sign        Stop Sign
Lanes:        1  0  1  1  0    1  0  2  0  0    0  0  0  0  0    0  0  1! 0  0
Initial Vol:   20  449    11     7  183     0     0    0     0    95    0     3
ApproachDel:    xxxxxx           xxxxxx           xxxxxx             19.2
------------|---------------||---------------||---------------||---------------|
Approach[westbound][lanes=1][control=Stop Sign]
Signal Warrant Rule #1: [vehicle-hours=0.5]
   FAIL - Vehicle-hours less than 4 for one lane approach.
Signal Warrant Rule #2: [approach volume=98]
   FAIL - Approach volume less than 100 for one lane approach.
Signal Warrant Rule #3: [approach count=3][total volume=768]
   SUCCEED - Total volume greater than or equal to 650 for intersection
             with less than four approaches.
-------------------------------------------------------------------------------
SIGNAL WARRANT DISCLAIMER
This peak hour signal warrant analysis should be considered solely as an
"indicator" of the likelihood of an unsignalized intersection warranting
a traffic signal in the future.  Intersections that exceed this warrant
are probably more likely to meet one or more of the other volume based
signal warrant (such as the 4-hour or 8-hour warrants).

The peak hour warrant analysis in this report is not intended to replace
a rigorous and complete traffic signal warrant analysis by the responsible
jurisdiction.  Consideration of the other signal warrants, which is beyond
the scope of this software, may yield different results.
                Peak Hour Volume Signal Warrant Report [Urban]
*******************************************************************************
Intersection #9 Fairmont Drive/ North Access Road
*******************************************************************************
Future Volume Alternative: Peak Hour Warrant NOT Met
------------|---------------||---------------||---------------||---------------|
Approach:      North Bound      South Bound       East Bound       West Bound
Movement:     L  -  T  -  R    L  -  T  -  R    L  -  T  -  R    L  -  T  -  R
------------|---------------||---------------||---------------||---------------|
Control:       Uncontrolled     Uncontrolled      Stop Sign        Stop Sign
Lanes:        1  0  1  1  0    1  0  2  0  0    0  0  0  0  0    0  0  1! 0  0
Initial Vol:   20  449    11     7  183     0     0    0     0    95    0     3
------------|---------------||---------------||---------------||---------------|
Major Street Volume:             670
Minor Approach Volume:           98
Minor Approach Volume Threshold: 423
-------------------------------------------------------------------------------
SIGNAL WARRANT DISCLAIMER
This peak hour signal warrant analysis should be considered solely as an
"indicator" of the likelihood of an unsignalized intersection warranting
a traffic signal in the future.  Intersections that exceed this warrant
are probably more likely to meet one or more of the other volume based
signal warrant (such as the 4-hour or 8-hour warrants).

The peak hour warrant analysis in this report is not intended to replace
a rigorous and complete traffic signal warrant analysis by the responsible
jurisdiction.  Consideration of the other signal warrants, which is beyond
the scope of this software, may yield different results.
```


Copyright (c) 2008 Dowling Associates, Inc. Licensed to TJKM, PLEASANTON, CA

Peak Hour Warrant (Urban Areas)

Intersection: I-580 WB Off-Ramp and FootHill Blvd, Alameda County, CA
Scenario: Existing plus Project Conditions A.M. Peak Hour

Figure 4C-3. Warrant 3, Peak Hour

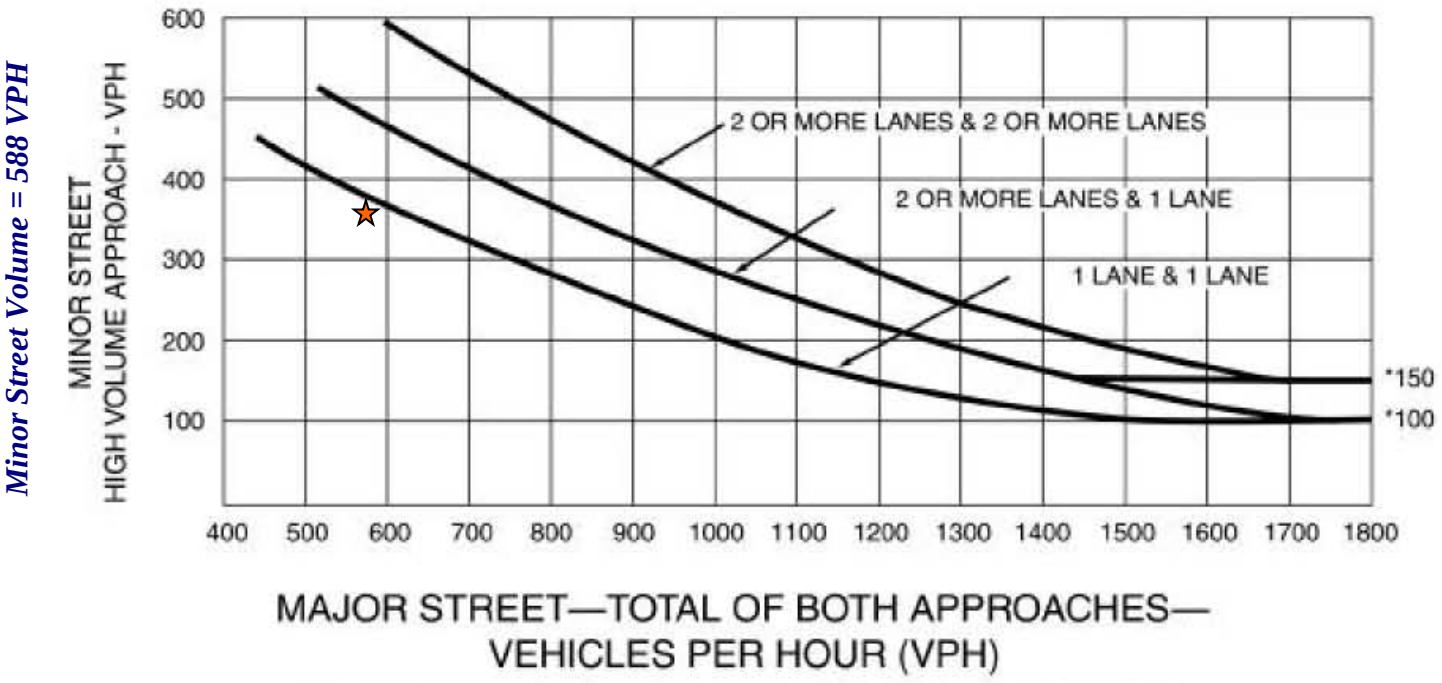

*Note: 150 vph applies as the lower threshold volume for a minor-street approach with two or more lanes and 100 vph applies as the lower threshold volume for a minor-street approach with one lane.

Major Street Volume = 392 VPH

A signal is not warranted

Source: CA MUTCD 2014, Chapter 4C – Traffic Control Signal Needs Studies, Part 4 - Highway Traffic Signals, Figure 4C-3

Intersection # 9 - Farimont Drive / North Access Road	
Int Delay, s/veh	5.1

Movement	WBL	WBR	NBU	NBT	NBR	SBU	SBL	SBT
Vol, veh/h	94	2	139	410	1	3	3	183
Conflicting Peds, #/hr	0	0	0	0	0	0	0	0
Sign Control	Stop	Stop	Free	Free	Free	Free	Free	Free
RT Channelized	-	None	-	-	None	-	-	None
Storage Length	0	-	100	-	-	-	330	-
Veh in Median Storage, #	0	-	-	0	-	-	-	0
Grade, %	0	-	-	0	-	-	-	0
Peak Hour Factor	80	80	83	83	83	82	82	82
Heavy Vehicles, %	2	2	2	2	2	2	2	2
Mvmt Flow	118	2	167	494	1	4	4	223

Major/Minor	Minor1		Major1			Major2		
Conflicting Flow All	956	248	163	0	0	364	495	0
Stage 1	830	-	-	-	-	-	-	-
Stage 2	126	-	-	-	-	-	-	-
Critical Hdwy	6.84	6.94	6.44	-	-	6.44	4.14	-
Critical Hdwy Stg 1	5.84	-	-	-	-	-	-	-
Critical Hdwy Stg 2	5.84	-	-	-	-	-	-	-
Follow-up Hdwy	3.52	3.32	2.52	-	-	2.52	2.22	-
Pot Cap-1 Maneuver	256	752	1129	-	-	844	1065	-
Stage 1	388	-	-	-	-	-	-	-
Stage 2	886	-	-	-	-	-	-	-
Platoon blocked, %				-	-			-
Mov Cap-1 Maneuver	256	752	1129	-	-	940	940	-
Mov Cap-2 Maneuver	256	-	-	-	-	-	-	-
Stage 1	388	-	-	-	-	-	-	-
Stage 2	886	-	-	-	-	-	-	-

Approach	WB	NB	SB
HCM Control Delay, s	30.2	2.2	0.3
HCM LOS	D		

Minor Lane/Major Mvmt	NBU	NBT	NBR	WBLn1	SBL	SBT
Capacity (veh/h)	1129	-	-	260	940	-
HCM Lane V/C Ratio	0.148	-	-	0.462	0.008	-
HCM Control Delay (s)	8.7	-	-	30.2	8.9	-
HCM Lane LOS	A	-	-	D	A	-
HCM 95th %tile Q(veh)	0.5	-	-	2.3	0	-